Innovation, Sciences et Développement économique Canada
Office de la Propriété Intellectuelle du Canada

Innovation, Science and Economic Development Canada
Canadian Intellectual Property Office

CA 3149435 A1 2021/04/08

(21) 3 149 435

(12) DEMANDE DE BREVET CANADIEN
CANADIAN PATENT APPLICATION

(13) A1

(86) Date de dépôt PCT/PCT Filing Date: 2020/09/28
(87) Date publication PCT/PCT Publication Date: 2021/04/08
(85) Entrée phase nationale/National Entry: 2022/02/01
(86) N° demande PCT/PCT Application No.: EP 2020/077093
(87) N° publication PCT/PCT Publication No.: 2021/063882
(30) Priorité/Priority: 2019/10/04 (EP19201453.8)

(51) Cl.Int./Int.Cl. *F41A 3/30* (2006.01), *F41A 21/12* (2006.01)

(71) Demandeur/Applicant:
GLOCK TECHNOLOGY GMBH, AT

(72) Inventeur/Inventor:
SEREINIG, SIEGFRIED, AT

(74) Agent: NORTON ROSE FULBRIGHT CANADA LLP/S.E.N.C.R.L., S.R.L.

(54) Titre : CANON POUR ARME A FEU A ESPACE DE VERROUILLAGE, ET PROCEDE DE PRODUCTION
(54) Title: BARREL FOR A FIREARM WITH LOCKING SPACE, AND PRODUCTION PROCESS

Fig.3

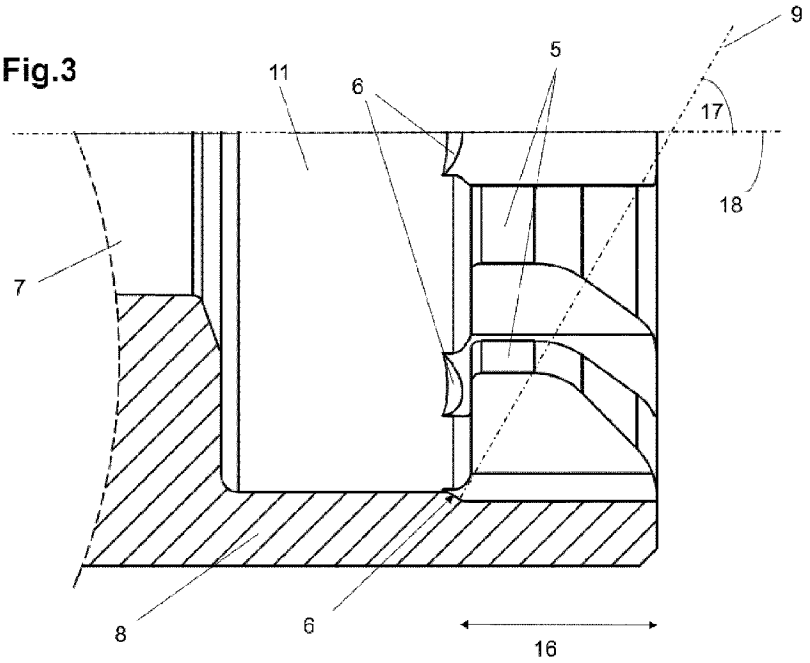

(57) Abrégé/Abstract:
The invention discloses a barrel for a firearm having a bore axis (18), a cartridge chamber (7) and an integrally formed locking sleeve (8) with a locking space (11), with locking lugs (5), the locking sleeve (8) has recesses (2) for bolt head lugs of a bolt head to be inserted. The barrel has, in the direction towards the cartridge chamber (7), at least two centering ramps (6) in the transition area between the recess for the lugs (5) and the locking space (11) in an oblique manner with respect to the bore axis (18). Further the recesses (2) forming the bayonet-type groove (12), viewed in the direction of the bore axis (18), each have a profile which comprises an elliptical segment. Further, the invention discloses a production process for such a barrel.

(12) INTERNATIONAL APPLICATION PUBLISHED UNDER THE PATENT COOPERATION TREATY (PCT)

(19) World Intellectual Property Organization
International Bureau

(43) International Publication Date
08 April 2021 (08.04.2021)

WIPO | PCT

(10) International Publication Number
WO 2021/063882 A1

(51) International Patent Classification:
F41A 21/12 (2006.01) *F41A 3/30* (2006.01)

(21) International Application Number:
PCT/EP2020/077093

(22) International Filing Date:
28 September 2020 (28.09.2020)

(25) Filing Language: English

(26) Publication Language: English

(30) Priority Data:
19201453.8 04 October 2019 (04.10.2019) EP

(71) Applicant: **GLOCK TECHNOLOGY GMBH** [AT/AT]; Gaston Glock-Park 1, 9170 Ferlach (AT).

(72) Inventor: **SEREINIG, Siegfried**; August-Jaksch-Straße 12/29, 9020 Klagenfurt (AT).

(74) Agent: **PATENTANWÄLTE BARGER, PISO & PARTNER**; Operngasse 4, 1010 Wien (AT).

(81) Designated States *(unless otherwise indicated, for every kind of national protection available)*: AE, AG, AL, AM, AO, AT, AU, AZ, BA, BB, BG, BH, BN, BR, BW, BY, BZ, CA, CH, CL, CN, CO, CR, CU, CZ, DE, DJ, DK, DM, DO, DZ, EC, EE, EG, ES, FI, GB, GD, GE, GH, GM, GT, HN, HR, HU, ID, IL, IN, IR, IS, IT, JO, JP, KE, KG, KH, KN, KP, KR, KW, KZ, LA, LC, LK, LR, LS, LU, LY, MA, MD, ME, MG, MK, MN, MW, MX, MY, MZ, NA, NG, NI, NO, NZ, OM, PA, PE, PG, PH, PL, PT, QA, RO, RS, RU, RW, SA, SC, SD, SE, SG, SK, SL, ST, SV, SY, TH, TJ, TM, TN, TR, TT, TZ, UA, UG, US, UZ, VC, VN, WS, ZA, ZM, ZW.

(84) Designated States *(unless otherwise indicated, for every kind of regional protection available)*: ARIPO (BW, GH, GM, KE, LR, LS, MW, MZ, NA, RW, SD, SL, ST, SZ, TZ, UG, ZM, ZW), Eurasian (AM, AZ, BY, KG, KZ, RU, TJ, TM), European (AL, AT, BE, BG, CH, CY, CZ, DE, DK, EE, ES, FI, FR, GB, GR, HR, HU, IE, IS, IT, LT, LU, LV,

(54) Title: BARREL FOR A FIREARM WITH LOCKING SPACE, AND PRODUCTION PROCESS

Fig.3

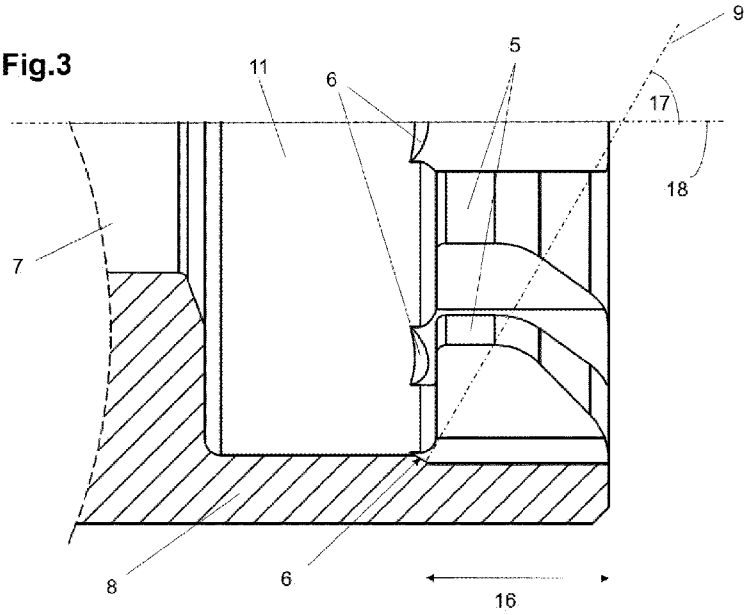

(57) Abstract: The invention discloses a barrel for a firearm having a bore axis (18), a cartridge chamber (7) and an integrally formed locking sleeve (8) with a locking space (11), with locking lugs (5), the locking sleeve (8) has recesses (2) for bolt head lugs of a bolt head to be inserted. The barrel has, in the direction towards the cartridge chamber (7), at least two centering ramps (6) in the transition area between the recess for the lugs (5) and the locking space (11) in an oblique manner with respect to the bore axis (18). Further the recesses (2) forming the bayonet-type groove (12), viewed in the direction of the bore axis (18), each have a profile which comprises an elliptical segment. Further, the invention discloses a production process for such a barrel.

WO 2021/063882 A1

[Continued on next page]

MC, MK, MT, NL, NO, PL, PT, RO, RS, SE, SI, SK, SM, TR), OAPI (BF, BJ, CF, CG, CI, CM, GA, GN, GQ, GW, KM, ML, MR, NE, SN, TD, TG).

Published:

— *with international search report (Art. 21(3))*

Barrel for a firearm with locking space, and production process

The invention relates to a barrel for a firearm, comprising a cartridge chamber, an integral locking sleeve with locking space, and a method for its production, according to the preamble of claim 1 and EP 2 964 407 B1 cited below.

Since this publication, as well as others, similar documents described below do not address the design of the locking space, let alone the locking lugs, it is a fictitious prior art, from which the claim proceeds.

In the application and the claims, “integral" refers to the one-piece design, regardless of whether it is effected by material removal, such as milling or grinding, by shape-changing processes, such as forging, or by additive methods, such as 3D printing processes. These are contrasted by designs that, by screwing, gluing, welding, etc. of several parts, form one barrel, even if it can no longer be disassembled.

General background:

Cartridge chambers are provided in firearms, for example, rifles, to receive the cartridges in the charged state and place the projectile in the barrel accordingly. In bolting locking systems, particularly the rotary piston lock, which is used, for example, in M4- or AR15-based systems, the so-called locking sleeve frequently adjoins the barrel and the cartridge chamber, and comprises the locking space, the locking lugs, and recesses, forming a bayonet-type groove, for bolt head lugs. For sealing the barrel toward the rear when firing, the bolt head is guided parallel to the bore axis in the firing direction through the bolt head passage into the locking space and then axially rotated by a forced rotational movement; the bolt head lugs engage behind the locking lugs, completing the locking process.

Particularly in the field or during automatic firing, contaminations, oscillations, shaking, vibrations and/or other influences can be the reason that the movement of the bolt head parallel to the bore axis takes place acentrically in the locking space. The locking process and subsequently the automatic reloading is thus made more difficult. For example, the bolt head can strike the step between the bayonet-type groove and the locking space and

lead to restlessness of the firearm. At worst, this can result in loading and/or feed jams of the firearm. Furthermore, the acentric movement of the bolt head causes premature wear and thus reduces the lifespan of the affected components.

From the prior art, two-piece designs for barrel and locking sleeve are generally known. The processing by means of machining methods, e.g., cutting or milling of the threads, requires appropriate material thicknesses in order to be able to have the required minimum material thicknesses in case of load. The milling of the locking lugs parallel to the bore axis also results in a round profile which again requires more material thickness than a flat profiling.

If machining methods are used, a repeated clamping is required to produce barrel, cartridge chamber, locking lugs, and the locking space.

Numerous proposals are known from the prior art, the most important ones shall be briefly described in the following, wherein the contents of all English-language documents shall by reference become part of the content of the present application.

By way of example, US2007033851A1 (Colt Defense LLC) shall be cited, which discloses a carbine with a one-piece barrel, including a cartridge chamber, and a screw-threaded locking sleeve for forming the locking space. In such two-piece designs with a screwable locking sleeve, a relatively high expenditure in terms of production for producing the thread on the barrel and the locking sleeve is required. Furthermore, the cumulative tolerance accumulated by the tolerance of the individual threads of the threaded connection can be detrimental in terms of length and positional accuracy with regard to the axial alignment. In addition, a locking pin present for securing the screw connection between the barrel and the locking sleeve equals a further, additional component and production expenditure. Furthermore, due to the screw connection and possible differences in the hardness of the materials of the barrel and the locking sleeve, this can result in a relatively great material thickness, particularly in the area of the locking sleeve. In addition, the segmented design of barrel, cartridge chamber and/or locking sleeve equals a high number of components.

EP0055307B1, DE102007034670A1, DE102007034675A1, and EP2663827A2 also disclose two-piece designs of the barrel with the cartridge chamber and the locking sleeve with locking space, but without addressing their production in detail.

One-piece designs for a barrel with cartridge chamber are also known from DE923103C and US8938903B2. The one-piece design is achieved by forging over a mandrel, wherein the formation of a locking chamber and thus also of locking lugs and a bayonet-type groove is completely absent.

In US2002/0050087A1 a loading apparatus for cartridges into a cartridge chamber is disclosed, wherein the loading apparatus comprises a locking piece being fastened to the cartridge chamber, or integrally formed with the barrel and the cartridge chamber. Although a method of aligning a bolt head axis with a bore axis is disclosed, no further information on reduction of weight and enhancement of durability can be found.

A method for producing a one-piece barrel with cartridge chamber and locking sleeve with locking chamber is known from EP2964407B1 (Steyr Mannlicher) and for the most part addresses hammering over two mandrels. The formation of the locking space is not described in detail.

Problem addressed by the present invention:
For economic reasons and to avoid the above-mentioned respective technical disadvantages, the objective is a most cost-effective production of the firearm and a preferably small number of components. There is thus a need for a one-piece barrel with cartridge chamber and an integral locking sleeve with locking space and locking lugs formed integrally in the locking sleeve, which does not have the above-mentioned disadvantages of the prior art, but has the initially described properties. The invention addresses the problem of providing such a one-piece barrel with a cartridge chamber and an integral locking sleeve with locking space and integral locking lugs.

Solution:
According to the invention, these problems are solved in that an initially described barrel has the features specified in the characterizing part of claim 1. In other words, the locking

sleeve guides a bolt head during its insertion in a centering manner, and so all the problems mentioned can be prevented.

It is thus possible to achieve in a technologically simple and cost-effective manner that

- the barrel and the integral locking sleeve are designed as one piece and that the locking lugs are designed to be integral;
- the bolt head is automatically centered when inserted into the locking space;
- the automatic centering of the bolt head is effected by the shape of the locking space as described below;
- the oblique shape of the locking space, as described below, in the transition area between the recesses for the bolt head lugs in the direction of the cartridge chamber forms a centering ramp for the bolt head.

In the following, the invention shall be explained in more detail using the drawings.

Figure 1 shows a cutaway view along the bore axis of a one-piece barrel according to the invention with a cartridge chamber and an integral locking sleeve with locking space and integral locking lugs;

Figure 2 shows a top view of the locking sleeve in the direction of the bore axis;

Figure 3 shows a detailed view of Figure 1 on an enlarged scale;

Figure 4 shows an embodiment of a possible production by means of a milling tool; and

Figure 5 shows three embodiments of profiles of the recesses for the locking lugs.

Figure 1 shows a one-piece barrel 1 with a bore axis 18 with a cartridge chamber 7 and an integrally formed locking sleeve 8 with a locking space 11 and integrally formed locking lugs 5. Strictly speaking, the bore axis 18 is the axis of the barrel bore 4, commonly called barrel axis; the firing direction runs in the direction of the arrow P.

Figure 2 shows a top view in the firing direction P of the barrel 1 with locking sleeve 8, with the barrel bore 4, the cartridge chamber 7, the locking lugs 5, and recesses 2, which form a bayonet-type groove for lugs of the bolt head. As can be clearly seen, eight recesses are provided, through which the eight lugs of the bolt head are axially inserted and then rotated (optimally by 360°/8 = 45°). In the description and also the claims, the

corresponding embodiments are mostly described using one lug, one recess, etc., but their plurality is not supposed to be disregarded.

During loading, the cartridge to be inserted reaches the cartridge chamber 7 via the feed ramps 3. During locking, the bolt head (not depicted) is moved parallel to the bore axis in the firing direction. The bolt head lugs (not depicted) reach the locking space 11 (Figures 3 and 4) through the recesses 2 of the locking sleeve; the bolt head is subsequently rotated in the circumferential direction, placing the bolt head lugs behind the locking lugs 5, thus locking them.

Influences occurring in the field or during automatic firing, such as contaminations, oscillations, shaking, vibrations, and the like, can lead to an acentric movement of the bolt head. With the use of centering ramps 6, said acentric movements are compensated, and the bolt head is automatically centered, thus avoiding possible jams and premature wear.

Figure 3 shows a detailed view of the locking sleeve as a cutaway view along the bore axis 18 with the centering ramp 6. The surface normal 9 on the centering ramp 6 and the angle α denoted with 17, between the surface normal 9 and the bore axis 18, are also shown. This angle is also called the cone angle, although strictly speaking, it does not describe a conical surface but a side surface of a pyramid. In the cutaway view, these angles coincide in the bore axis/cutter axis plane (Figure 4).

Figure 4 shows an embodiment of a production method according to the invention of the centering ramp 6 by means of obliquely tilted circular cylindrical cutters 10 with a cutter axis 19 (which runs parallel to or coincides with the surface normal 9) and an end face running normally thereto. The movement of the cutter 10 during the production process is indicated by the double arrow D.

The shape and naturally also the dimensions of the centering ramp 6 are defined by:
the angle (α) 17 which (theoretically) can be a minimum of 0° and a maximum of 90°,
the width of the locking lugs 16,
the radius (r_1) 12 of the bayonet-type groove,
the radius (r_2) 13 of the locking space,

the radius (r_3) 14 of the bolt head passage, and
the diameter (D_W) 15 of the machining tool,
or the ratios of these variables to one another.

The method according to the invention is not limited to the depicted and described embodiment; other machining methods, such as shaping and drawing, or additive production processes, such as 3D printing, or other production processes can be used.

Figure 5 shows different profiles of the recesses 2 forming the bayonet-type groove for the bolt head lugs, viewed in the direction of the barrel axis 18. Depending on the selected parameters of the production process by milling, the corresponding profile can be selected or achieved. Figure 5a shows the theoretical profile of a rectangular surface, which would be the result if the cutter is used in the borderline case of the angle (α) 17 = 90°, i.e., the cutter axis 19 is normal to the barrel axis 18. The second borderline case with an angle (α) 17 = 0°, thus parallel to the barrel axis 18, would have a profile with a rectangular surface with an adjacent semicircular surface, see Figure 5c.s The embodiment of the recesses achievable according to the invention for the bolt head lugs by obliquely applying the cutter 10 leads to a profile with an essentially rectangular base which is adjoined by an elliptical segment-shaped partial surface, Figure 5b.

It is immediately obvious that the two borderline cases do not entail any advantages; in the first case, the sharp-edged design of the profile causes the problem of notch stresses, which naturally must be avoided. The second borderline case avoids the problems of the notch stress, but a comparatively great material thickness in the radial direction is required in order to be able to ensure passage of the bolt head lugs, which generally have a rectangular profile. The solution according to the invention with an oblique cutter axis is thus advantageous over both borderline cases.

The solution according to the invention allows for a smooth and continuous insertion of the bolt head into the locking space with automatic centering of the bolt head during the locking process. It has been found that during insertion into the locking sleeve, the bolt head can slide along the inclined centering ramps, resulting in the self-centering. As a result, premature material wear and loading or feed jams can also be avoided.

Furthermore, the solution according to the invention achieves weight savings because the design of a barrel with a cartridge chamber and integral locking sleeve results in material savings at simultaneously high achievable strengths. In addition, the production only requires a one-time clamping.

For a further weight reduction, an adapted profile, viewed correspondingly in the barrel direction, of the recesses forming the bayonet-type groove for the bolt head lugs would be desirable, which is achievable in one embodiment of the invention.

The entire production of such a barrel according to the invention is possible, for example, by means of forging, hammering, and subsequent machining processes, such as milling, shaping, and drawing. However, it is also conceivable to use additive methods (3D printing) or a combination of these methods.

The incline of the centering ramp can be produced, for example, as described in detail, by milling with an obliquely applied cutter. The work angle of the cutter is equal to the angle (α) 17, which is formed between a surface normal to the centering ramp and the bore axis, also called cone angle.

The optimum work angle α of the cutter can easily be determined by a person skilled in the art on the basis of the width of the locking lugs, the radius of the bayonet-type groove r_1, the radius of the locking space r_2, the radius of the bolt head passage r_3, and the diameter D_W of the machining tool. An angle range from >0° to a maximum of 90°, preferably from 15-75° and particularly preferably from 45-60°, has proven to be particularly practical.

As an alternative to milling, a shaping or broaching operation is also possible, wherein a shaper is moved in the direction of the bore axis of the barrel such that the recesses for the bolt head lugs are formed, and the tool is shifted radially inwards such that, when the locking space is reached, a previously mentioned centering ramp is formed for the bolt head to be introduced.

It is also conceivable to produce the locking sleeve designed according to the invention by means of additive methods, such as 3D printing methods.

In the context of the present invention, it has been found that it is particularly advantageous if the bolt head has obliquely shaped the locking lugs as a mating surface to the centering ramps for supporting the automatic centering process.

Furthermore, it has been realized that the profile of the recesses 2 forming the bayonet-type groove, viewed in the barrel direction, is of crucial importance for achieving the smallest possible material thickness and thus for saving mass.

In the description and the claims, the terms “front," “rear," “top," “bottom," etc. are used in the common form and with reference to the object in its normal operating position. This means that in the case of a weapon, the muzzle of the barrel is in the “front," that the lock or the carriage is moved toward the “rear” by the explosion gases, etc. “Barrel direction" is the direction of the bore axis; “transversely thereto" essentially refers to a direction rotated by 90° to said bore axis.

It should also be noted that in the description and claims, specifications, such as "lower area" of a hanger, reactor, filter, building, or a device or, more generally, an object, refer to the lower half and particularly to the lower quarter of the total height, "bottom area” refers to the bottom quarter, and particularly to an even smaller portion; while “center area" refers to the middle third of the total height (width - length). All these specifications have their general meaning, applied to the intended position of the object viewed.

In the description and claims, “essentially" refers to a deviation of up to 10% of the stated value, if it is physically possible, both downwards and upwards, otherwise only in the meaningful direction; for degree specifications (angle and temperature), ± 10° shall apply.

Unless they relate to the specific examples, all specifications regarding quantities and portions, particularly those for delimiting the invention, are supposed to indicate a ± 10% tolerance, for example: 11% means: from 9.9% to 12.1%. For terms such as "a solvent” or

“a locking lug,” the word "a” or “an” is to be regarded as an indefinite article or as a pronoun, unless the context indicates otherwise.

Unless otherwise specified, the term: “combination" or "combinations" refers to all types of combinations, proceeding from two of the relevant components to a multiplicity, or also all, of such components; the term "containing" also stands for "consisting of."

The features and variations specified in the individual embodiments and examples can be freely combined with the features and variations of the other examples and embodiments, and can also be used without the obligatory inclusion of the other details of the respective embodiment or the respective example, particularly for characterizing the invention in the claims.

5 List of reference signs:

1	Barrel
2	Recess(es)
3	Cartridge feed ramps
4	Barrel bore
5	Locking lugs
6	Centering ramp
7	Cartridge chamber
8	Locking sleeve
9	Surface normal
10	Cutter
11	Locking space
12	Radius of the bayonet-type groove r_1
13	Radius of the locking space r_2
14	Radius of the bolt head passage r_3
15	Radius of the machining tool D_W
16	Width of the locking lugs parallel to the bore axis
17	Angle α
18	Bore axis (of the barrel)
19	Cutter axis
20	Bolt head

10

Claims:

1) Barrel (1) for a firearm having a bore axis (18), a cartridge chamber (7) and an integrally formed locking sleeve (8) with a locking space (11), wherein the locking lugs (5) are integral with the barrel, wherein the locking sleeve (8) has recesses (2) for bolt head lugs of a bolt head to be inserted, characterized in that
in the direction towards the cartridge chamber (7) at least two centering ramps (6) are formed in the transition area between the recess for bolt head lugs (5) and the locking space (11) in an oblique manner with respect to the bore axis (18), for guiding a bolt head in a centering manner when it is introduced into the locking space (11),
and that the recesses (2) forming the bayonet-type groove (12), viewed in the direction of the bore axis (18), each have a profile which comprises an elliptical segment.

2.) Barrel according to claim 1, characterized in that the oblique centering ramp (6) runs at an angle α (17) with respect to the bore axis (18), wherein: $0 < \alpha < 90°$, preferably $15 < \alpha < 75$ and particularly preferably $45 < \alpha < 60°$.

3.) Firearm, particularly an automatic rifle, characterized in that it comprises a barrel according to any one of the claims 1 or 2.

4.) Firearm according to claim 3, characterized in that it comprises a bolt head, the locking lugs of which have obliquely formed mating surfaces toward the centering ramp (6).

5.) Method for producing a barrel according to any one of the claims 1 or 2, characterized in that it comprises the following steps:

- providing a one-piece barrel;
- forming at least two recesses for bolt head lugs 2;
- forming at least two centering ramps (6) in the transition area between the recesses (2) for bolt head lugs in the direction toward the cartridge chamber (7) and the locking space (11).

6.) Method according to claim 5, characterized in that at least the forming of the centering ramps (6) is performed in a machining manner.

7.) Method according to claim 6, characterized in that the centering ramps (6) are produced by obliquely applying a cutter (10) to the bore axis (18).

8.) Method according to any of claim 6 or 7, characterized in that the centering ramps (6) are formed by a two-stage shaping process.

9.) Method according to claim 6, characterized in that the locking sleeve (8) is formed by means of additive manufacturing.

Fig.1

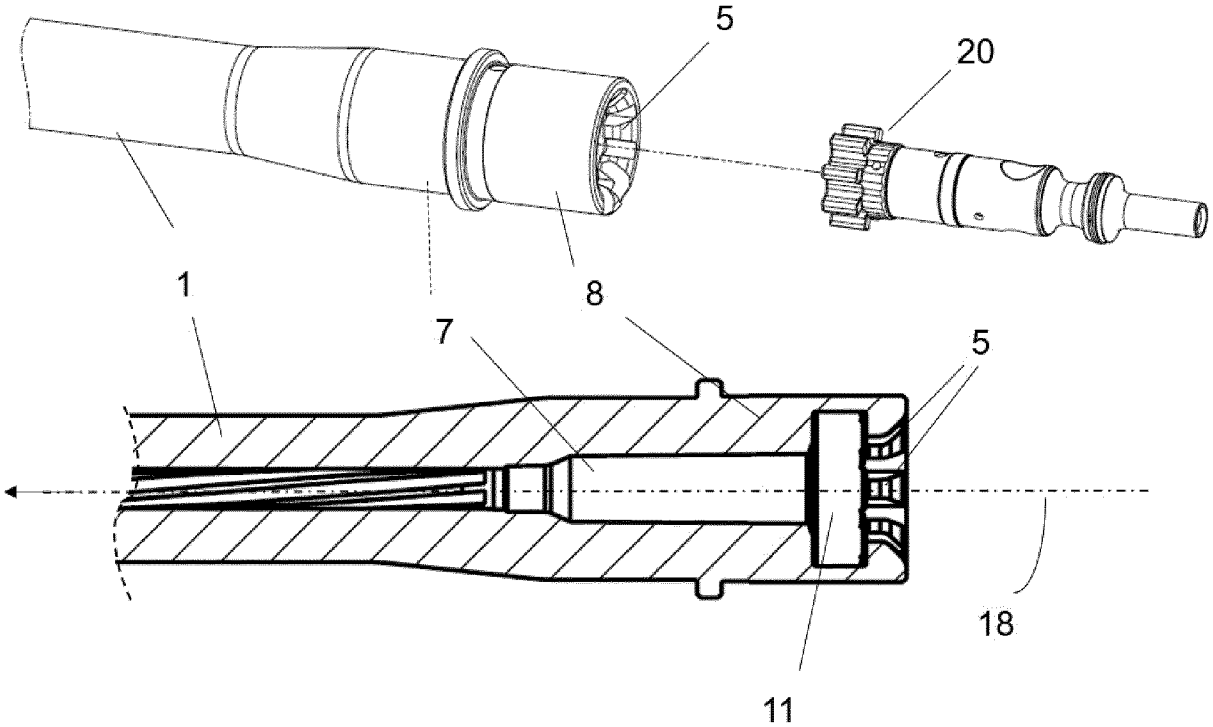

Fig.2

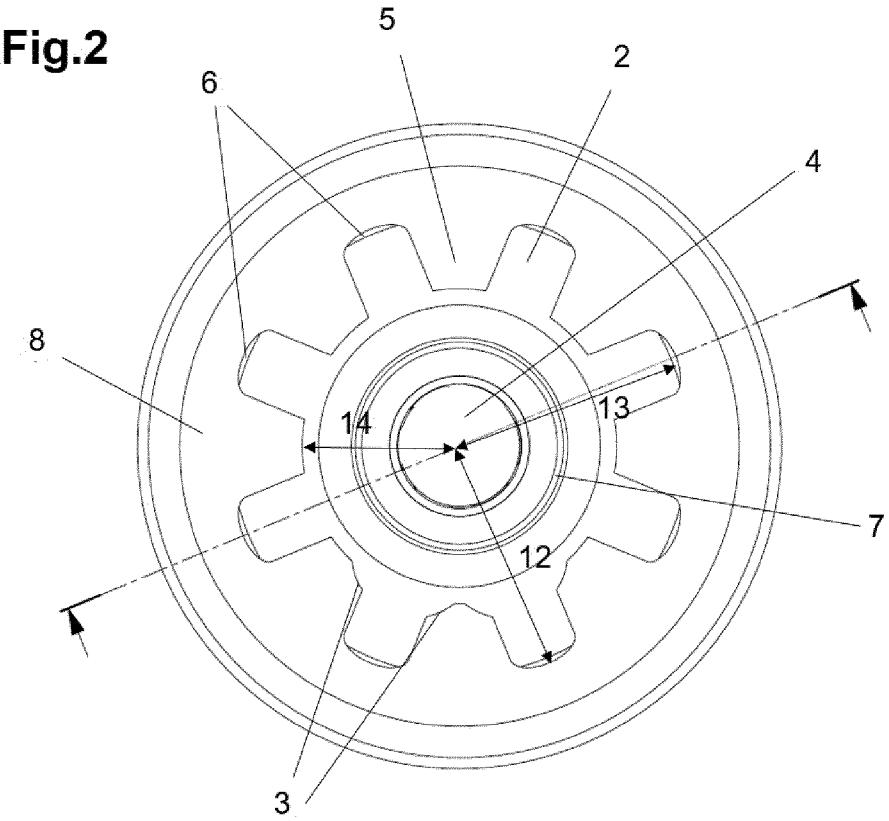

Fig.3

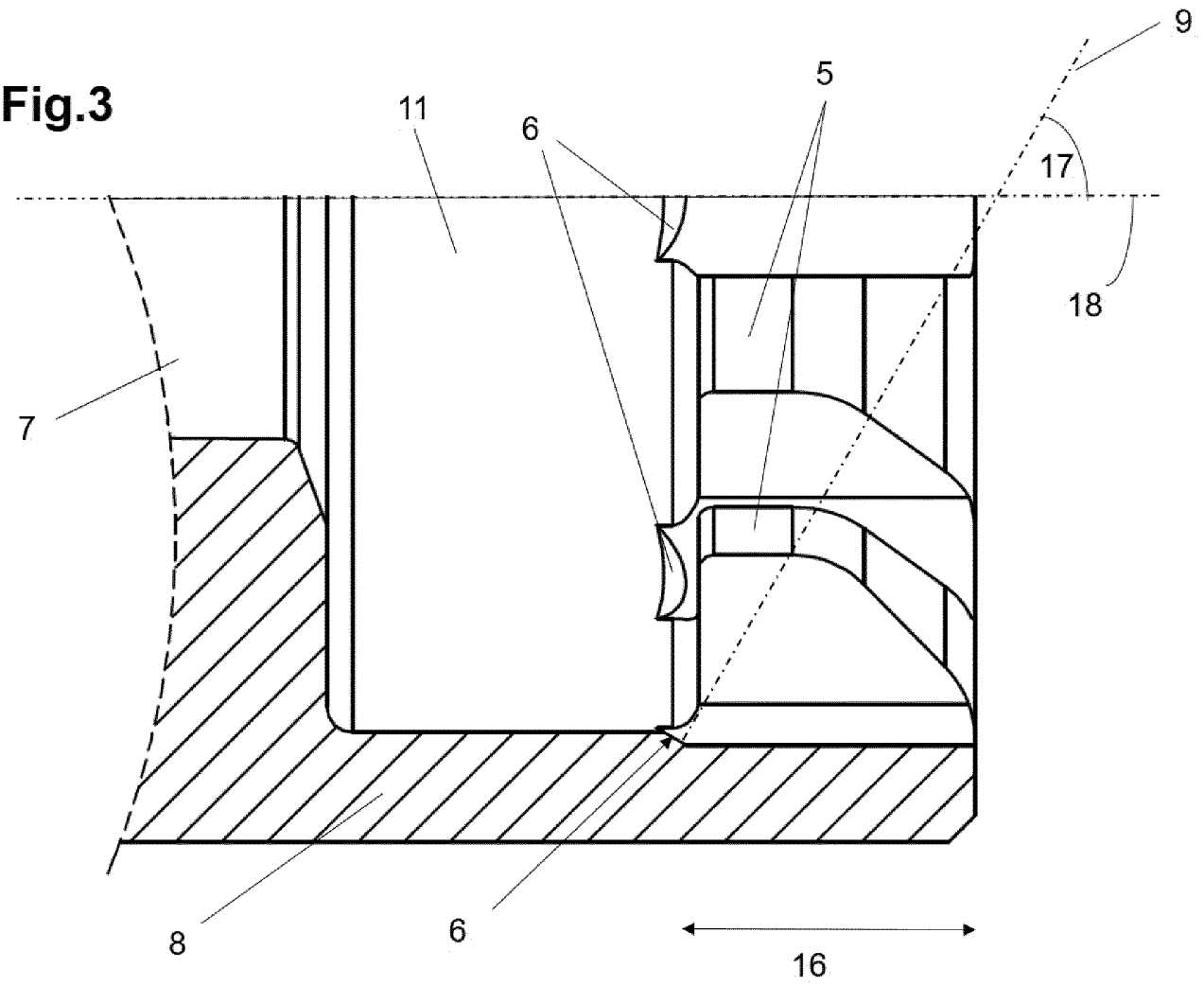

Fig.4

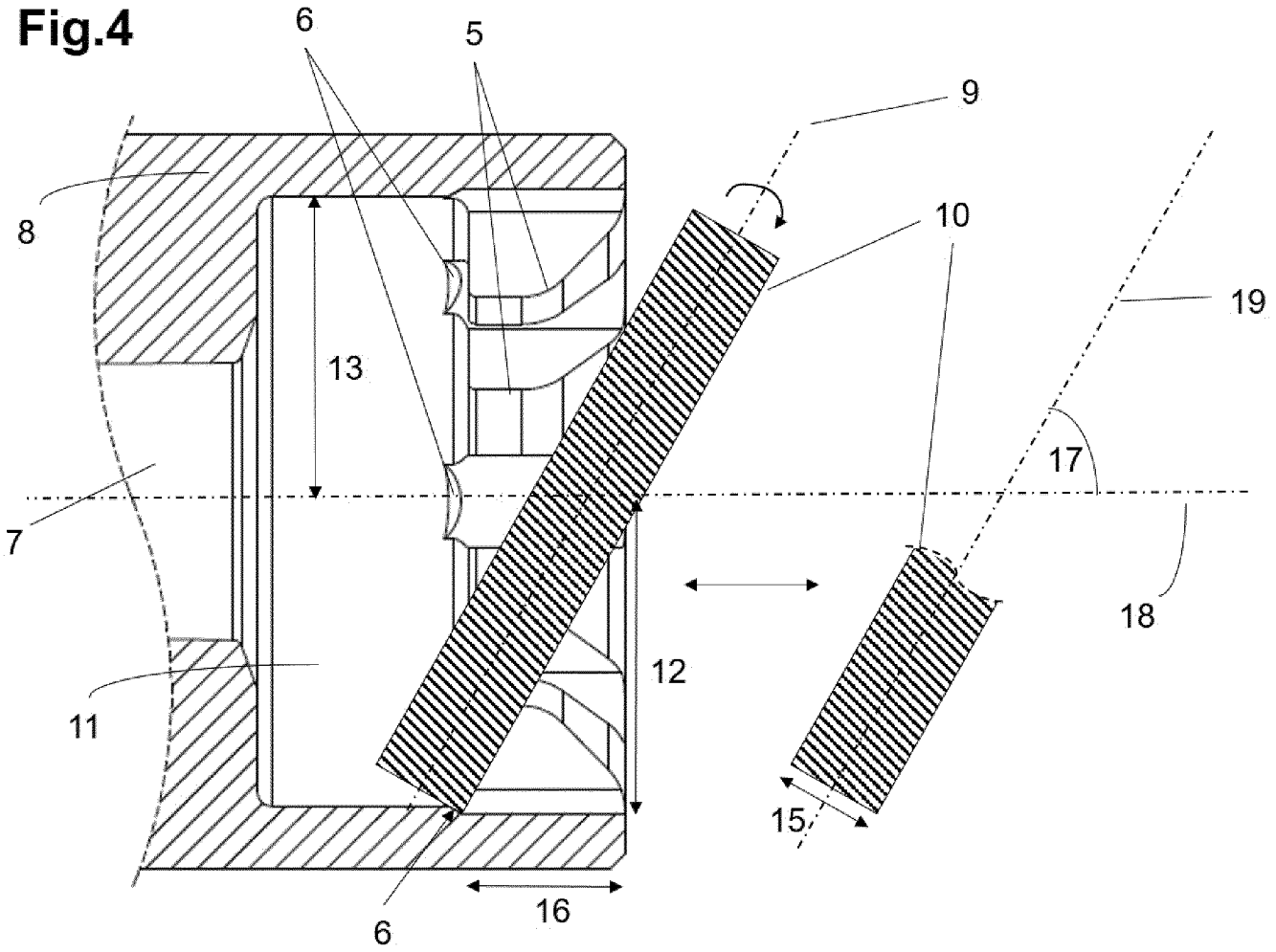

Fig.5

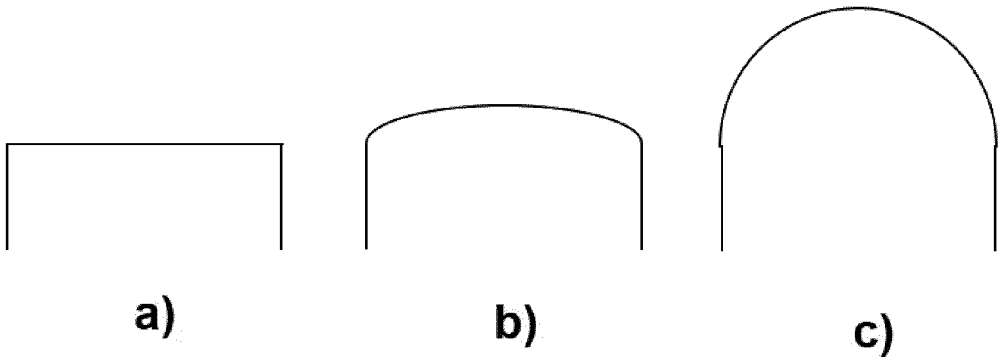

Fig.3

