(12) PATENT
(19) AUSTRALIAN PATENT OFFICE

(11) Application No. AU 199716188 B2
(10) Patent No. 710656

(54) Title
Address generator, image display, address generation method and image display method

(51)[6] International Patent Classification(s)
G09G 005/00 G09G 005/14

(21) Application No: 199716188 (22) Application Date: 1997 .02 .06

(87) WIPO No: WO97/29476

(30) Priority Data

(31) Number	(32) Date	(33) Country
8-20333	1996 .02 .06	JP

(43) Publication Date : 1997 .08 .28
(43) Publication Journal Date : 1997 .10 .23
(44) Accepted Journal Date : 1999 .09 .23

(71) Applicant(s)
Sony Computer Entertainment Inc.

(72) Inventor(s)
Akio Ohba

(74) Agent/Attorney
GRIFFITH HACK,GPO Box 1285K,MELBOURNE VIC 3001

(56) Related Art
JP 1-251094

PCOPI DATE 28/08/97 APPLN. ID 16188/97
AOJP DATE 23/10/97 PCT NUMBER PCT/JP97/00298

AU9716188

(51) 国際特許分類6
G09G 5/00, 5/14

A1

(11) 国際公開番号 WO97/29476

(43) 国際公開日 1997年8月14日(14.08.97)

(21) 国際出願番号 PCT/JP97/00298

(22) 国際出願日 1997年2月6日(06.02.97)

(30) 優先権データ
特願平8/20333 1996年2月6日(06.02.96) JP

(71) 出願人（米国を除くすべての指定国について）
株式会社 ソニー・コンピュータエンタテインメント
(SONY COMPUTER ENTERTAINMENT INC.)[JP/JP]
〒107 東京都港区赤坂8丁目1番22号 Tokyo, (JP)
(72) 発明者；および
(75) 発明者／出願人（米国についてのみ）
大場章男(OHBA, Akio)[JP/JP]
〒107 東京都港区赤坂8丁目1番22号
株式会社 ソニー・コンピュータエンタテインメント内
Tokyo, (JP)
(74) 代理人
弁理士 小池 晃, 外(KOIKE, Akira et al.)
〒105 東京都港区虎ノ門二丁目6番4号 第11森ビル Tokyo, (JP)

(81) 指定国 AU, CA, CN, KR, MX, SG, US, 欧州特許 (AT, DE, ES, FR, GB, IT, NL).

添付公開書類
国際調査報告書

(54)Title: **ADDRESS GENERATOR, IMAGE DISPLAY, ADDRESS GENERATION METHOD AND IMAGE DISPLAY METHOD**

(54)発明の名称 アドレス発生装置及び画像表示装置並びにアドレス発生方法及び画像表示方法

(57) **Abstract**

The image data read out from a VRAM (18) are supplied to a selection synthesis section (63) through line buffers (75a to 75d). The line buffer (75d) stores the image data supplied from outside and supplies this image data to the VRAM (18). The VRAM (18) writes the image data supplied from outside through the line buffer (75d) and reads out this image data on the basis of the addresses from a control section in the same way as other image data. Cache memories (74a and 74b) read out the image data under the control of the control section (71) and display a plurality of tile-like images on the screen of a display.

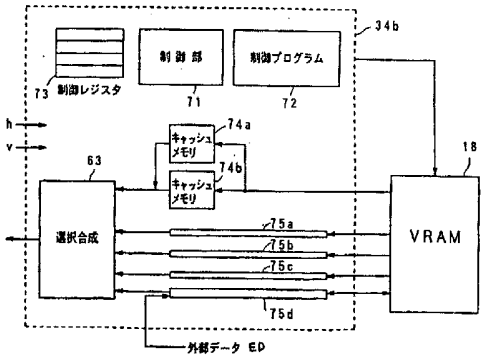

63 ... selection synthesis
71 ... control section
72 ... control program
73 ... control register
74a, 74b ... cache memory
ED ... external data

ABSTRACT

Picture data read out from a VRAM 18 are sent via line buffers 75a to 75d to a selection synthesis unit 63. The line buffer 75d seizes picture data supplied from outside for sending the seized picture data to the VRAM 18. The VRAM 18 can write the picture data from outside supplied via the line buffer 75d and read out the picture data based on addresses from a controller in the same way as other picture data. On the other hand, cache memories 74a and 74b can read out picture data under control by the controller 71 to display plural pictures in a tiled pattern on a display screen.

AUSTRALIAN PATENT OFFICE

SPECIFICATION

Address Generating Apparatus, Picture Display Apparatus, Address Generating Method and Picture Displaying method

Technical Field

This invention relates to an address generating apparatus, a picture display apparatus, an address generating method and a picture displaying method used in a graphics computer, a special effect device or a video game machine which are picture equipments employing a computer.

Background Art

A picture display apparatus having a picture memory, such as a personal computer or a television game machine, data written in the picture memory is read out in accordance with synchronization signals of, for example, the NTSC (National Television System Committee) system.

Such picture display apparatus includes a cathode ray tube controller (CRTC) 302 for generating pre-set addresses based on synchronization signals generated by a synchronization signal generating circuit 301, a VRAM 303 for reading out one-frame picture data based on addresses designated by the CRTC 302 and a D/A converter 305 for converting frame data supplied via a line buffer 304 into analog data, as shown for example in Fig.1.

The CRTC 302 includes a horizontal synchronization counter 311 for counting horizontal synchronization signals, a horizontal resolution reducing circuit 312 for lowering the horizontal

AUSTRALIAN PATENT OFFICE

resolution to a pre-set value in case of necessity, a horizontal slicing circuit 313 for starting slicing horizontal scanning lines, and a summation circuit 314 for summing data from the horizontal resolution reducing circuit 312 and the horizontal slicing circuit 313.

In addition, the CRTC 302 includes a vertical synchronization counter 316 for counting the vertical synchronization signals, a vertical resolution reducing circuit 317 for lowering the vertical resolution to a pre-set value in case of necessity, a vertical slicing circuit 318 for starting slicing vertical scanning lines, a summation circuit 319 for summing data from the vertical resolution reducing circuit 317 and the vertical slicing circuit 318 and an address generating circuit 320 for generating addresses based on the horizontal synchronization signals and the vertical horizontal synchronization signals supplied thereto.

In the above-described picture display apparatus, the synchronization signal generating circuit 301 generates the horizontal synchronization signals and the vertical horizontal synchronization signals which are sent to the CRTC 302.

In the CRTC 302, the horizontal synchronization counter 311 counts the horizontal synchronization signals supplied from the synchronization signal generating circuit 301.

The horizontal resolution reducing circuit 312 reduces the number of the horizontal synchronization signals, if necessary,

AUSTRALIAN PATENT OFFICE

for lowering the horizontal resolution of picture data read out from the VRAM 303.

When a pre-set timing is reached by the counting of the horizontal synchronization signals by the horizontal synchronization counter 311, the horizontal slicing circuit 313 generates horizontal slicing data for slicing at a pre-set position of the horizontal scanning line and transmits the horizontal slicing data to the summation circuit 314.

The summation circuit 314 superimposes the horizontal slicing data on the supplied horizontal synchronization signals and transmits the superimposed data to the address generating circuit 320.

On the other hand, the vertical resolution reducing circuit 316 counts the vertical synchronization signals from the synchronization signal generating circuit 301.

The vertical resolution reducing circuit 317 reduces the number of the vertical synchronization signals, if need be, for lowering the vertical resolution of picture data read out from the VRAM 303.

When a pre-set timing is reached by the counting of the vertical synchronization signals by the vertical synchronization counter 318, the vertical slicing circuit 318 generates vertical slicing data for slicing at a pre-set position of the vertical scanning line and transmits the vertical slicing data to the summation circuit 314.

AUSTRALIAN PATENT OFFICE

The summation circuit 319 superimposes the vertical slicing data on the supplied horizontal synchronization signals and transmits the superimposed data to the address generating circuit 320.

The address generating circuit 320 generates addresses associated with the superimposed data supplied thereto and transmits the resulting addresses to the VRAM 303.

The VRAM 303 sends the picture data associated with the supplied addresses via line buffer 304 to the D/A converter 305.

The D/A converter 305 converts the supplied picture data into analog data for outputting video signals.

Thus, the picture data written in the VRAM 303 is directly displayed via CRTC 302 on a display screen.

However, if frame data including plural pictures are written in the VRAM 303, it has not been possible with the CRTC 302 employed in the above-described picture display apparatus to slice the plural pictures to display the sliced pictures at a desired location on a sole screen.

Moreover, it has not been possible with the CRTC 302 to seize plural picture data supplied from outside to display the seized picture data on the screen.

In view of the above-depicted status of the art, it is an object of the present invention to provide an address generating apparatus, a picture display apparatus, an address generating method and a picture display method, whereby plural pictures can

AUSTRALIAN PATENT OFFICE

be displayed at plural locations on a sole screen and whereby a picture supplied from outside can also be seized and displayed thereon.

DISCLOSURE OF THE INVENTION

An address generating apparatus according to the present invention includes address generating means for generating addresses for reading out picture signals written in a picture memory based on synchronization signals, a plurality of buffers respectively supplied with picture signals read out from the picture memory based on the addresses and controlling means for independently controlling the picture signals outputted by the buffers so that the picture signals supplied to the buffers will be displayed on a sole screen.

In the address generating apparatus according to the present invention, at least one of the buffers preferably seizes picture signals supplied from outside to route the seized picture signals to the picture memory.

A picture displaying apparatus according to the present invention includes address producing means having address generating means for generating addresses for reading out picture signals written in a picture memory based on synchronization signals, a plurality of buffers respectively supplied with picture signals read out from the picture memory based on the addresses, and controlling means for independently controlling the picture signals outputted by the buffers so that the picture

AUSTRALIAN PATENT OFFICE

signals supplied to the buffers will be displayed on a sole screen, and synthesizing means for synthesizing picture signals outputted by the buffers.

In the picture displaying apparatus according to the present invention, preferably at least one of the buffers seizes picture signals supplied from outside to route the seized picture signals to the picture memory.

In the picture displaying apparatus according to the present invention, preferably the synthesizing means is program-controlled based on pre-set calculations by the control means.

The picture displaying apparatus according to the present invention preferably includes one or more cache memories fed with picture signals read out from the picture memory for writing supplied picture signals. The control means sequentially read-out controls the picture signals written in the cache memory for causing a plurality of pictures of the same sort to be displayed on a sole screen.

In the picture displaying apparatus according to the present invention, the buffer preferably is made up of a line memory.

An address generating method according to the present invention includes generating addresses for reading out picture signals written in a picture memory based on synchronization signals, supplying picture signals read out from the picture memory based on the addresses to the buffers, and independently

AUSTRALIAN PATENT OFFICE

controlling the picture signals outputted by the buffers so that the picture signals supplied to the buffers will be displayed on a sole screen.

A picture displaying method according to the present invention includes generating addresses for reading out picture signals written in a picture memory based on synchronization signals, supplying picture signals read out from the picture memory based on the addresses to the buffers, independently controlling the picture signals outputted by the buffers so that the picture signals supplied to the buffers will be displayed on a sole screen, and synthesizing the picture signals outputted by the buffers for display.

BRIEF DESCRIPTION OF THE DRAWINGS

Fig.1 is a block diagram for illustrating a conventional CRTC.

Fig.2 illustrates typical representation on a display of video signals outputted via the CRTC.

Fig.3 illustrates a schematic structure of a video game machine employing the present invention.

Fig.4 illustrates typical examples of a texture picture and a target color in the picture displaying method according to the present invention.

Fig.5 illustrates a PCRTC employing an address generating apparatus according to the present invention.

Fig.6 illustrates the conceptual structure of the CRTC.

AUSTRALIAN PATENT OFFICE

Fig.7 illustrates typical representation of a display of video signals outputted via PCRTC.

Fig.8 illustrates a specified structure of the PCRTC.

Fig.9 s a plan view of a video game machine employing the present invention.

Fig.10 is a back side view of the video game machine.

Fig.11 is a side view of the video game machine.

Fig.12 is a plan view showing a CD-ROM loaded on the video game machine.

BEST MODE FOR CARRYING OUT THE INVENTION

Referring to the drawings, preferred embodiments of the present invention will be explained in detail.

The present invention is applied to a video game machine configured as shown in Fig.3.

This video game machine is designed for reading out and executing a video program stored in, for example, an optical disc, for playing the game responsive to instructions from a user, and is configured as shown in Fig.3.

That is, the video game machine has two sorts of buses, namely a main bus 1 and a sub-bus 2.

The main bus 1 and the sub-bus 2 are interconnected via a bus controller 16.

To the main bus 1 are connected a main central processing unit (main CPU) 11, comprised of a micro-processor, a main memory 12, comprised of an access memory (RAM), a main direct memory

AUSTRALIAN PATENT OFFICE

access controller (main DMAC) 13, an MPEG decoder 14 and a picture processing unit or graphic processing unit GPU 15. To the sub-bus 2 are connected a subsidiary central processing unit (sub-CPU) 21, comprised of a random access memory (RAM), a subsidiary direct memory access controller (sub-DMAC) 23, a read-only memory (ROM) 24, having stored therein programs, such as operating systems, a sound processing unit (SPU) 25, a communication controller or asynchronous transmission mode (ATM) 26, a subsidiary memory 27, an input device 28 and a CD-ROM driver 30.

The bus controller 16 is a device on the man bus 1 for executing the switching between the main bus 1 and the sub-bus 2 and is initially in an opened state.

The main CPU 11 is a device operated by a program on the main memory 12. Since the bus controller 16 is initially in the opened state during startup, the main CPU 11 reads out the boot program from the ROM 214 on the sub-bus 2 and executes it to reproduce the application program and necessary data from the CD-ROM by the CD-ROM driver 30 for loading on the main memory 12 and on devices on the sub-bus 2. On the main CPU 11 is loaded a geometry transfer engine (GTE) 17 configured for performing processing, such as coordinate transformation. The GTE 17 has a parallel computing mechanism for parallel execution of plural calculations and executes calculations such as coordinate transformation, light source calculations, matrix or vector

AUSTRALIAN PATENT OFFICE

calculations at a high speed responsive to requests for calculations from the main CPU 11. The main CPU 11 defines a three-dimensional model as a combination of basic unitary figures (polygons) such as triangles or quadrangles based on the results of calculations by the GTE 17 to prepare instructions for delineation corresponding to respective polygons for delineating a three-dimensional picture. The main CPU 11 also packetizes the instructions for delineation to send the instructions for delineation as a command packet to the GPU 15.

The main DMAC 13 is a device on the main bus 1 for managing DMA transfer of a device on the main bus 1. The main DMAC 15 has a device on the sub-bus 2 as an object when the bus controller 16 is in an opened state.

The GPU 15 is a device on the main bus 1 functioning as a rendering processor. This GPU 15 interprets the instructions for delineation transmitted thereto as a command packet from the DMAC 13 to calculate the Z-value and the colors of all pixels making up the polygon from color data of the apex points and the Z-values specifying the depth. In addition, the GPU 15 performs rendering processing for writing the pixel data on a frame buffer 18 as a picture memory responsive to the Z-values.

The MDEC 14 is an I/O connection device capable of operating parallel to the CPU, and is a device on the main bus 1 functioning as the picture expanding engine. This MDEC 14 decodes picture data encoded after orthogonal transform such as discrete

AUSTRALIAN PATENT OFFICE

cosine transform.

The sub-CPU 21 is a device on the sub-bus 2 operating by a program on the sub-memory 22.

The sub-DMAC 23 is a device on the sub-bus 2 for managing DMA transfer for the device on the sub-memory 22. This sub-DMAC 23 acquires rights for the bus only when the bus controller 16 is closed.

The SPU 25 is a device on the sub-bus 2 functioning as a sound processor. This SPU 25 reads out and outputs sound source data from the sound memory 29 responsive to the sound command sent as a command packet from the sub-CPU 21 or the sub-DMAC 23.

The ATM 26 is a device for communications on the sub-bus 2.

The subsidiary memory 27 is a data input/output device on the sub-bus 2 and is made up of a non-volatile memory, such as a flash memory. This subsidiary memory 27 transiently stores data such as a game process or scores.

The input/output device 28 is an input device on the sub-bus 2 from other equipments, such as a control pad, man/machine interface, such as a mouse, picture input or speech input.

In addition, the CD-ROM driver 30 is a data input device on the sub-bus 2, and reproduces necessary data or application programs from the CD-ROM.

That is, with the present video game machine, the geometric processing system, performing geometric processing, such as coordinate transformation, clipping or light source calculations,

AUSTRALIAN PATENT OFFICE

defining three-dimensional models as a combination of the unitary figures (polygons), such as triangles or quadrangles, for preparing instructions for delineation for delineating a three-dimensional picture for transmitting the instructions for delineation for respective polygons as a command packet on the main bus 1, is made up of the main CPU 11 on the main bus 1 and the GTE 17, while the rendering processing system for generating pixel data for respective polygons based on the instructions for delineation from the geometric processing system for writing in the frame buffer 18 by way of rendering processing for writing a figure on the frame buffer 18 is made up of the GPU 15.

The GPU 15 has a packet engine 31 which is connected to the main bus 31 as shown in Fig.4 showing its basic structure, and performs rendering processing of writing pixel data of the respective pixels in the frame buffer 18 in accordance with the instructions for delineation sent from the main CPU 11 or the main DMAC 13 to the packet engine 31 as a command packet, while reading out the pixel data of a picture delineated on the frame buffer 18 for supplying the pixel data as video signals via a display controller or CRT controller 34 on a televison receiver or a monitor receiver, not shown.

The packet engine 31 develops the command packet, sent from the main CPU 11 or main DMAC 13 over the main bus 1 via the packet engine 31 on a register, not shown.

The pre-processor 32 also generates polygon data in

AUSTRALIAN PATENT OFFICE

accordance with the instructions for delineation sent to the packet engine as a command packet and processes the polygon data with pre-set pre-processing such as division of polygons as later explained, while generating various data, such as the information on the coordinates of apex points of each polygon, the address information on the texture or mip map texture or the control information for the pixel interleaving, as required by the delineation engine 33.

In addition, the delineation engine 33 includes N polygon engines 33A1, 33A2, ...33AN, connected to the pre-processor 32, N texture engines 33B1, 33B2, ...33BN, connected to the polygon engines 33A1, 33A2, ...33AN, a sole bus switcher 33C, connected to the texture engines 33B1, 33B2, ...33BN, M pixel engines 33D1, 33D2, ...33DM, connected to the first bus switcher 33C, a second bus switcher 33E, connected to the pixel engines 33D1, 33D2, ...33DM,
a texture cache 33F connected to the second bus switcher 33E, and a CLUT cache 33G connected to the texture cache 33F.

In the delineating engine 33, the N polygon engines 33A1, 33A2, ...33AN perform polygon-based shading processing, by parallel processing, on polygons sequentially produced responsive to the delineating instructions based on polygon data pre-processed by the pre-processor 32.

The N texture engines 33B1, 33B2, ...33BN perform texture mapping or mip mapping by parallel processing on texture data

AUSTRALIAN PATENT OFFICE

supplied thereto from the texture cache 33F via color lookup table (CLUT) cache 33G for each polygon generated by the polygon engines 33A1, 33A2, ...33AN.

It is noted that the address information of the texture or mip map texture bonded to the polygon processed by the N texture engines 33B1, 33B2, ...33BN is supplied in advance from the pre-processor 32 to the texture cache 33F, and the texture data as required is transferred from the texture area on the frame buffer 18 based on the above-mentioned address information. To the CLUT cache 33G are supplied CLUT data to be referred to at the time of texture delineation is transmitted from the CLUT area on the frame buffer 18.

The polygon data, processed with texture mapping or mip mapping by the above-mentioned texture engines 33B1, 33B2, ...33BN, is transferred via the first bus switcher 33C to the M pixel engines 33D1, 33D2, ...33DM.

The M pixel engines 33D1, 33D2, ...33DM perform various picture processing operations, such as Z-buffer processing or anti-aliasing, by parallel processing, to generate M pixel data.

The M pixel data, generated by the M pixel engines 33D1, 33D2, ...33DM, are written in the frame buffer 18 via second bus switcher 33E.

The second bus switcher 33E is fed with the control information on pixel interleaving from the pre-processor 32. The second bus switcher 33E has the function of selecting L of M

AUSTRALIAN PATENT OFFICE

pixel data generated by the M pixel engines 33D1, 33D2, ...33DM based on the above-mentioned control information for writing M pixel data at a time with the M storage locations in meeting with the shape of the polygon delineated on the frame buffer 18 as accessing units by way of performing the pixel interleaving.

The delineating engine 33 generates all pixel data of each polygon to write the generated pixel data on the frame buffer 18 based on the polygon data pre-processed by the pre-processor 32 in order to write on the frame buffer 18 the picture defined as the combination of polygons by the above-mentioned delineation instructions. The delineating engine 33 also reads out the pixel data of the picture delineated on the frame buffer 18 in order to send the read-out pixel data via a programmable cathode ray tube controller (PCRTC) 34 as video signals to a television receiver or a monitor receiver, not shown.

The PCRTC 34 reads out picture data written on the frame buffer 18 in accordance with synchronization signals for displaying not only plural pictures on a sole screen but also picture data seized from outside.

That is, the PCRTC 34 generates pre-set addresses from the horizontal synchronization signals and the vertical synchronization signals from the synchronization signal generating circuit 51 based on count values from an H-counter 52 and a V-counter 53 as shown in Fig.5. The PCRTC 34 reads out picture data from the VRAM 18, based on the above addresses. The

AUSTRALIAN PATENT OFFICE

picture data are supplied. The PCRTC 34 controls the outputting of the picture data to output video signals via D/A converter 54.

Specifically, the synchronization signal generating circuit 51 generates the horizontal synchronization signals and the vertical synchronization signals and sends the signals to the H-counter 52 and the V-counter 53, respectively.

The H-counter 52 counts the horizontal synchronization signals supplied thereto, while the V-counter 53 is driven based on the count operation of the H-counter 52 to count the vertical synchronization signals supplied thereto.

After the H-counter 52 and the V-counter 53 have counted pre-set numbers to set slicing positions, the PCRTC 34 generates an address associated with a given pixel, frame to frame. Then, after counting a pre-set number for setting the slicing position, the PCRTC 34 generates an address associated with another picture. That is, since one-frame picture data made up of plural pictures have been written in the VRAM 18, an address associated with the respective picture data is generated within one frame period.

The VRAM 18 is configured so that picture data will be sequentially written therein in the frame period. Each time the address is read out from the PCRTC 34, the picture data associated with the supplied address is read out and furnished to the PCRTC 34.

After output-controlling the supplied picture data for

AUSTRALIAN PATENT OFFICE

causing pre-set pictures to be displayed at pre-set positions on the screen, the PCRTC 34 sends the picture data to the D/A converter 54, which then converts the supplied picture data into analog signals to output video signals.

That is, the PCRTC 34 reads out picture data, corresponding to plural pictures displayed on a sole viewing screen, from the VRAM 18, and output-controls the read-out picture data in order to permit plural pictures with different resolutions to be displayed on a screen.

Meanwhile, the PCRTC 34 can seize picture data from outside to write picture data in the VRAM 18. In addition, the PCRTC 34 can generate addresses for reading out the picture data as other picture data, as will be explained later in detail.

The configuration of the CRTC according to a first embodiment will be explained.

A PCRTC 34a according to a first embodiment has plural CRTC buffers, for displaying plural pictures with different resolutions on one screen, and also can independently control the CRTC buffers.

Specifically, the PCRTC 34a has a controller 61, plural CRTC buffers 62a to 62g and a selective synthesis unit 63, as shown for example in Fig.6. In the VRAM 18 are written picture data with different resolutions, as shown in Fig.7.

Once a pre-set number of the synchronization signals has been counted and the desired slicing position has thereby been

AUSTRALIAN PATENT OFFICE

set, the controller 61 can lower the resolution if the high-resolution picture data has been seized in the VRAM 18 but the picture data should be displayed on a low-resolution screen. The PCRTC 34a generates addresses for slicing a picture of low resolution stored in the VRAM 18 in order to send the address to the VRAM 18. When the next slicing position has been set, the PCRTC 34a generates addresses for slicing another picture data of high resolution stored in the VRAM 18.

In the VRAM 18 are written picture data of low resolution and picture data of high resolution displayed in one frame, as shown in Fig.7. Each time an address is furnished from a control unit 61, the picture data corresponding to the address is read out and sent to a CRTC buffer 62. Similarly to the picture data directly written in the VRAM 18, the picture data supplied from outside via a CRTC buffer 62g is read out from the VRAM 18 by the address from the controller 61.

The CRTC buffer 62 is constituted by plural CRTC buffers 62a to 62g, as described above, and is fed with and transiently stores picture data of different resolutions of different pictures in each of the CRTC buffers 62a to 62g. The CRTC buffers 62a to 62g are controlled independently by the controller 61 for sequentially selecting and synthesizing the picture data from one horizontal scanning line to another. This permits the PCRTC 34a to display pictures of different resolutions from one scanning line to another, as in the case of the display representation

AUSTRALIAN PATENT OFFICE

shown in Fig.7.

On the other hand, the CRTC buffer 62g of the CRTC buffer 62 has bidirectional functions. That is, the CRTC buffer 62g can seize picture data supplied from outside and transmit the seized picture data to the VRAM 18. When fed with an address from the controller 61, the VRAM 18 can read out picture data seized similarly to other picture data. The picture data, thus read out, is supplied via a CRTC 62g to the selection synthesis unit 63.

The selection synthesis unit 63 has a selector 64 for selecting supplied picture data, a coefficient control circuit 65, and a filter 66, and respective picture data are supplied via CRTC buffers 62a to 62g to the selector 64.

The selector 64 selects the supplied picture data, under control by the controller 61, and sends only pre-set picture data to the filter 66.

When fed with pre-set picture data from the selector 64, the coefficient control circuit 65 modifies part of parameters of the picture data, based on the results of calculations by the control unit 61, or multiplies part or all of parameters of the picture data sent to the filter 66 with alpha-values representing opacity of the object.

The filter 66 synthesizes the supplied picture data to output synthesized picture data. The output synthesized picture data are converted by the D/A converter into analog video signals. With the analog video signals, plural pictures can be

AUSTRALIAN PATENT OFFICE

displayed on a display screen, as shown in Fig.7.

The configuration of the CRTC of a second embodiment is now explained. In the following description, the same reference numerals as those used in the first embodiment are used to depict similar components.

With a PCRTC 34b of the second embodiment, having a line buffer in place of the CRTC buffer as shown in Fig.8, representation may be made in a similar manner by independently controlling these line buffers. The PCRTC 34b includes a controller 71, a control program unit 72, a control register 73, cache memories 74a, 74b, line buffers 75a to 75b and a selection synthesis unit 63.

The controller 71 modifies parameters of part of picture data as later explained or executes calculations for alpha-values based on a program stored in the control program 72. The controller 71 generates an address to be supplied to the VRAM 18 via control register 73, while controlling the cache memory 74, line buffer 75 and the selection synthesis unit 63.

The VRAM 18 is responsive to the supplied address to read out-picture data. The read-out picture data is supplied via line buffers 75a to 75d to the selection synthesis unit 63. The line buffer 75d is a bi-directional line buffer and can seize picture data supplied from outside to send the picture data to the VRAM 18. The VRAM 18 can write picture data from outside, supplied via line buffer 75d, and read out the picture data, based on the

AUSTRALIAN PATENT OFFICE

address from the controller, as other picture data. The VRAM 18 also sends the picture data to the cache memories 74a, 74b.

The cache memories 74a, 74b are each made up of plural memories and can write supplied picture data. The cache memories 74a, 74b read out picture data, under control by the controller 71, and transmits the picture data to the selection synthesis unit 63.

The selection synthesis unit 63 modifies parameters of part of the supplied picture data or multiplies part or all of the parameters of the picture data with alpha-values representing the opacity of the object. The selection synthesis unit 63 then selects the supplied picture data to synthesize the selected picture data. The synthesized are converted by a D/A converter into analog signals. A plurality of the analog picture data can be displayed in a tiled fashion on the display screen. The PCRTC 34b can contribute to reduction in production costs by use of line buffers 75a to 75d in place of the CRTC buffer.

In addition, since picture data read out from the VRAM 18 is supplied to the PCRTC 34b and plural picture data can be independently output-controlled via line buffers 75a to 75d, plural pictures can be displayed on a sole display screen.

Moreover, with the PCRTC 34b, since the external picture data can be seized by the bidirectional line buffer 75d and written in the VRAM, if a pre-set address is generated by the controller, the seized picture data is read out from the VRAM 18

AUSTRALIAN PATENT OFFICE

as other picture data. This enables the PCRTC 34b not only to display plural pictures on a display screen, but also to seize and display a picture from outside.

The video game machine embodying the present invention is configured as shown for example in a plan view of Fig.9, a front view of Fig.10 and a side view of Fig.11.

That is, a video game machine 201, shown in Fig.9, is basically made up of a main body portion 202, and an operating unit 217 connected to the main body portion 202 via a cable 227. A disc loading unit 203 is provided at a mid portion of the upper surface of the main body portion 202 and a CD-ROM 251 shown in Fig.12 is loaded in the inside of the unit 203. On the left side of the disc loading unit 203 are provided a power source switch 205 actuated for turning the power source of the apparatus on or off, and a reset switch 204 for temporarily resetting the game. On the right side of the disc loading unit 203 is provided a disc actuating switch 206 actuated when loading or unloading the CD-ROM 251 to the disc loading unit 203.

On the front side of the main body portion 202 are provided connecting portions 207A, 207B, as shown in Fig.10. These connecting portions 207A, 207B are provided with a connecting terminal 226 at a foremost part of a cable 227 led out from the terminal inserting portion 217, a connection terminal inserting portion 212 for connection to a recording unit 228 such as a memory card, and a recording inserting unit 208. That is, two

AUSTRALIAN PATENT OFFICE

actuating units 217 and two recording units 228 can be connected to the main body portion 202.

The front view of Fig.10 shows the state in which the connection terminal 226 and the recording unit 228 are connected to the right side connection portion 207B, while none of the connection terminal 226 or the recording unit 228 is loaded on the left side connection portion 207A. Referring to Fig.10, a shutter 209 is provided on the recording inserting unit 208, so that, when the recording unit 228 is loaded on the main body portion 202, the shutter 209 is pushed inwards by the distal end of the recording unit 228 for loading the recording unit 228.

A grip part 231A of the connection terminal 226 and a grip part 242A of the recording unit 228 are processed for anti-slipping, such as by knurling. The length of the connection terminal 226 and that of the recording unit 228 are selected to be substantially of the same value, as shown in a side view of Fig.11.

The operating unit 27 has supporting portions 220, 221 gripped by left and right hands. The distal ends of the supporting portions 220, 221 are provided with actuating portions 218, 219. The operating portions 224 ,225 can be operated by an index finger of left or right hand, while the operating portions 218, 219 can be operated with a thumb of the left or right hand.

A selection switch 222 actuated when performing a selecting operation during the game and a start switch 223 actuated when

AUSTRALIAN PATENT OFFICE

starting the game are provided between the actuating portions 218, 219.

With the present video game machine 201, the CD-ROM 251 loaded on the disc loading unit 203 is reproduced by the above-mentioned CD-ROM driver 30. The actuating unit 217 is equivalent to the input device 28, while the recording device 228 is equivalent to the subsidiary memory 27.

With the above-described address generating apparatus, pre-set addresses are generated based on the synchronization signals so that picture data written in the field memory are sequentially read out. The picture data thus read out are sent to plural line buffers in the address generating apparatus. Therefore, the address generating apparatus independently controls the outputs of the respective picture data via each line buffer so that plural pictures can be displayed on one and the same screen.

Also, with the above-described address generating apparatus, at least one of the plural line buffers can seize picture data from outside for writing on the field memory, so that, when a pre-set address is produced, picture data seized from outside is read out from the field memory, as other picture data. Therefore, the address generating apparatus can read out a picture seized from outside in the same way as the picture data written in the picture memory, thus enabling plural pictures to be displayed on the same screen.

With the above-described picture displaying apparatus, pre-

AUSTRALIAN PATENT OFFICE

set addresses are generated based on the synchronization signals so that picture data written in the field memory are sequentially read out. The picture data thus read out are sent to plural line buffers in the address generating apparatus. Therefore, the picture displaying apparatus independently controls the outputs of the respective picture data via each line buffer to produce video signals so that plural pictures can be displayed on one and the same screen.

Also, with the picture displaying apparatus, at least one of the plural line buffers can seize picture data from outside for writing on the field memory, so that, when a pre-set address is produced, picture data seized from outside is read out from the field memory, as other picture data. Therefore, the picture displaying apparatus can read out a picture seized from outside in the same way as the picture data written in the picture memory to output video signals, thus enabling plural pictures to be displayed on the same screen.

With the above-described picture displaying apparatus, since the control means is program-controlled, it becomes possible to display a clear picture by partially modifying parameters of picture data or by making calculations of alpha-values.

Moreover, with the above-described picture displaying apparatus, plural pictures of the same sort can be displayed on the same screen by writing picture signals by the cache memory and by sequentially read-out controlling picture signals written

AUSTRALIAN PATENT OFFICE

in the cache memory by the controlling means.

AUSTRALIAN PATENT OFFICE

CLAIMS

1. An address generating apparatus comprising:

address generating means for generating addresses for reading out picture signals written in a picture memory based on synchronization signals;

a plurality of buffers respectively supplied with picture signals read out from said picture memory based on said addresses; and

controlling means for independently controlling the picture signals outputted by said buffers so that the picture signals supplied to said buffers will be displayed on a sole screen.

2. The address generating apparatus as claimed in claim 1 wherein at least one of said buffers seizes picture signals supplied from outside to route the seized picture signals to said picture memory.

3. A picture displaying apparatus comprising:

address producing means having address generating means for generating addresses for reading out picture signals written in a picture memory based on synchronization signals, a plurality of buffers respectively supplied with picture signals read out from said picture memory based on said addresses, and controlling means for independently controlling the picture signals outputted by said buffers so that the picture signals supplied to said buffers will be displayed on a sole screen; and

synthesizing means for synthesizing picture signals

AUSTRALIAN PATENT OFFICE

outputted by said buffers.

4. The picture displaying apparatus as claimed in claim 3 wherein at least one of said buffers seizes picture signals supplied from outside to route the seized picture signals to said picture memory.

5. The picture displaying apparatus as claimed in claim 3 wherein said synthesizing means is program-controlled based on pre-set calculations by said control means.

6. The picture displaying apparatus as claimed in claim 3 further comprising one or more cache memories fed with picture signals read out from said picture memory;

said cache memory writing supplied picture signals;

said control means sequentially read-out controlling the picture signals written in said cache memory for causing a plurality of pictures of the same sort to be displayed on a sole screen.

7. The picture displaying apparatus as claimed in claim 3 wherein said buffer is made up of a line memory.

8. An address generating method comprising:

generating addresses for reading out picture signals written in a picture memory based on synchronization signals;

supplying picture signals read out from said picture memory based on said addresses to said buffers; and

independently controlling the picture signals outputted by said buffers so that the picture signals supplied to said buffers

AUSTRALIAN PATENT OFFICE

will be displayed on a sole screen.

9. A picture displaying method comprising:

generating addresses for reading out picture signals written in a picture memory based on synchronization signals;

supplying picture signals read out from said picture memory based on said addresses to said buffers;

independently controlling the picture signals outputted by said buffers so that the picture signals supplied to said buffers will be displayed on a sole screen; and

synthesizing the picture signals outputted by said buffers for display.

AUSTRALIAN PATENT OFFICE

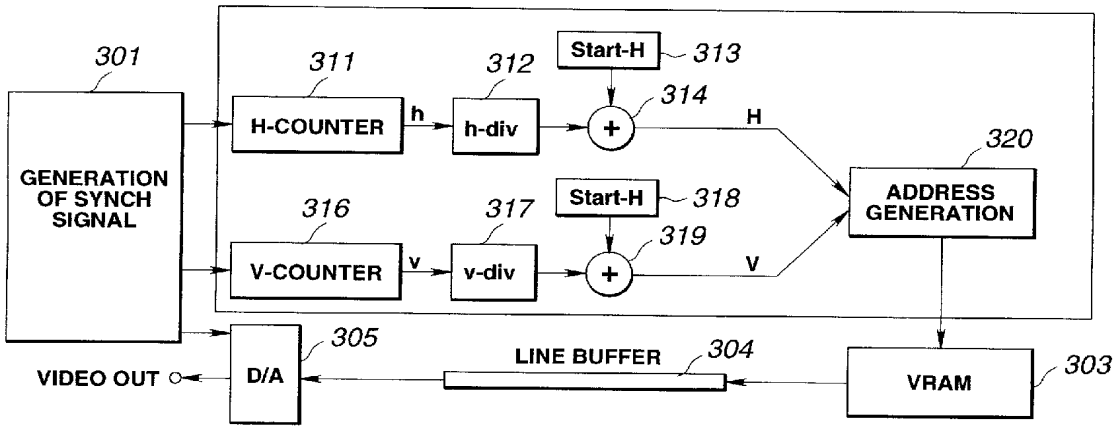
301
311
312
Start-H
313
314
H-COUNTER
h
h-div
H
320
GENERATION OF SYNCH SIGNAL
ADDRESS GENERATION
316
317
Start-H
318
319
V-COUNTER
v
v-div
V
305
304
LINE BUFFER
303
VIDEO OUT
D/A
VRAM

FIG.1

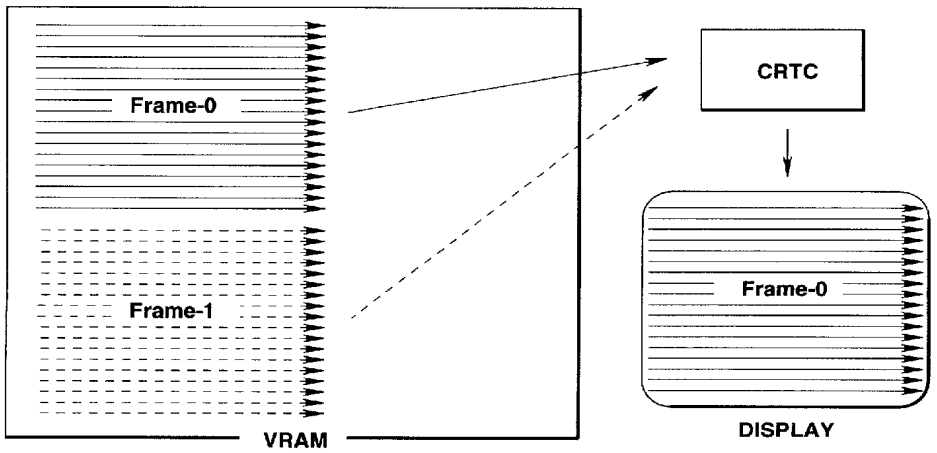

FIG.2

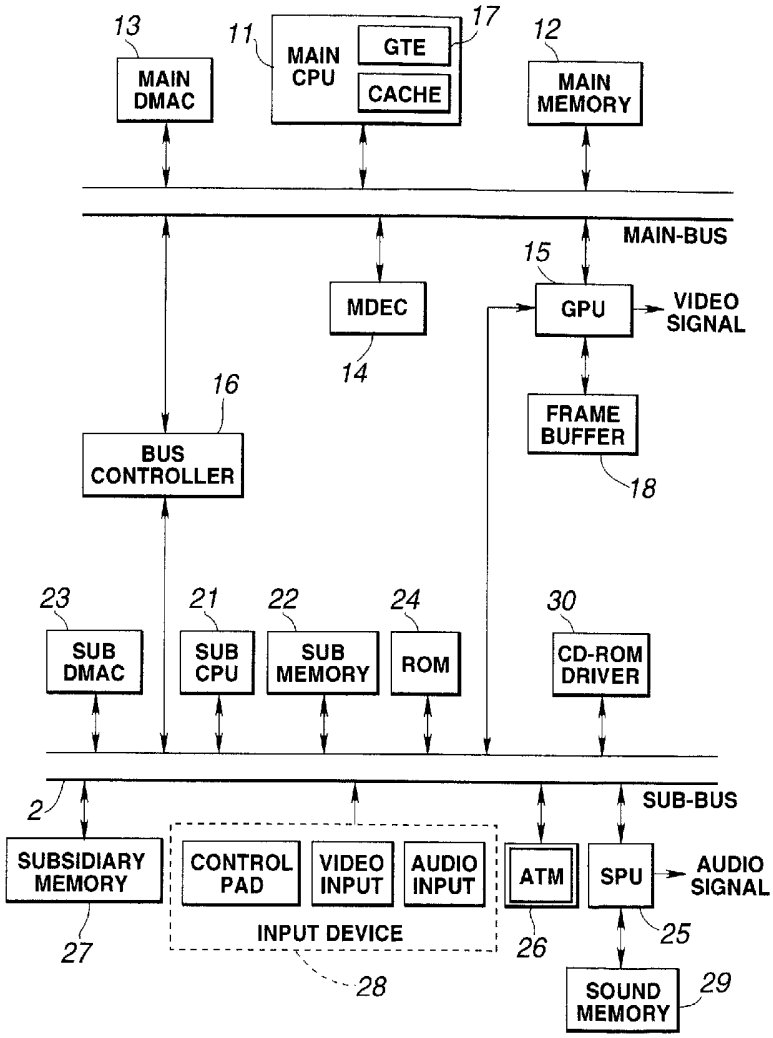
13
MAIN DMAC
11
MAIN CPU
GTE
CACHE
17
12
MAIN MEMORY
MAIN-BUS
15
MDEC
14
GPU
VIDEO SIGNAL
16
BUS CONTROLLER
FRAME BUFFER
18
23
SUB DMAC
21
SUB CPU
22
SUB MEMORY
24
ROM
30
CD-ROM DRIVER
SUB-BUS
2
SUBSIDIARY MEMORY
27
CONTROL PAD
VIDEO INPUT
AUDIO INPUT
INPUT DEVICE
28
ATM
26
SPU
AUDIO SIGNAL
25
SOUND MEMORY
29

FIG.3

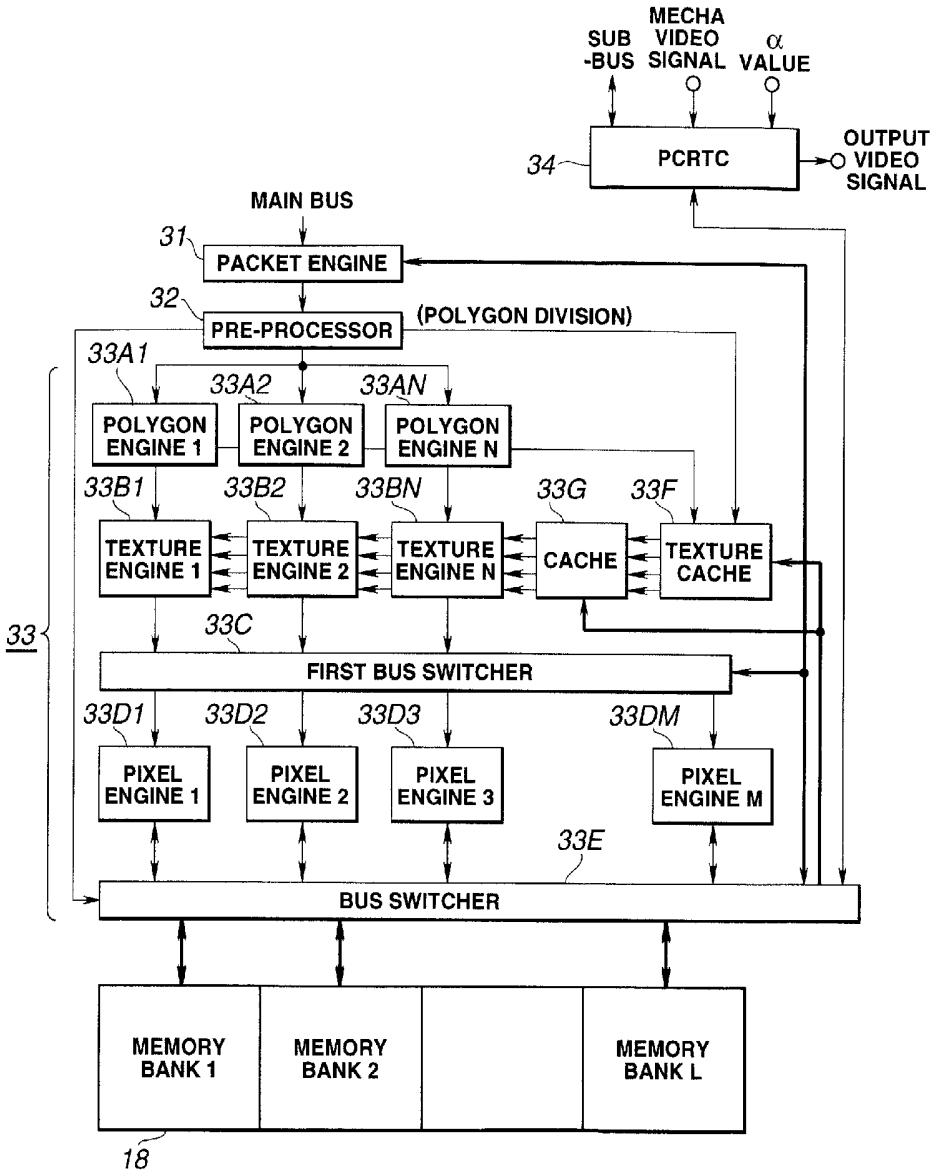
SUB -BUS
MECHA VIDEO SIGNAL
α VALUE
34
PCRTC
OUTPUT VIDEO SIGNAL
MAIN BUS
31
PACKET ENGINE
32
PRE-PROCESSOR
(POLYGON DIVISION)
33A1
33A2
33AN
POLYGON ENGINE 1
POLYGON ENGINE 2
POLYGON ENGINE N
33B1
33B2
33BN
33G
33F
TEXTURE ENGINE 1
TEXTURE ENGINE 2
TEXTURE ENGINE N
CACHE
TEXTURE CACHE
33
33C
FIRST BUS SWITCHER
33D1
33D2
33D3
33DM
PIXEL ENGINE 1
PIXEL ENGINE 2
PIXEL ENGINE 3
PIXEL ENGINE M
33E
BUS SWITCHER
MEMORY BANK 1
MEMORY BANK 2
MEMORY BANK L
18

FIG.4

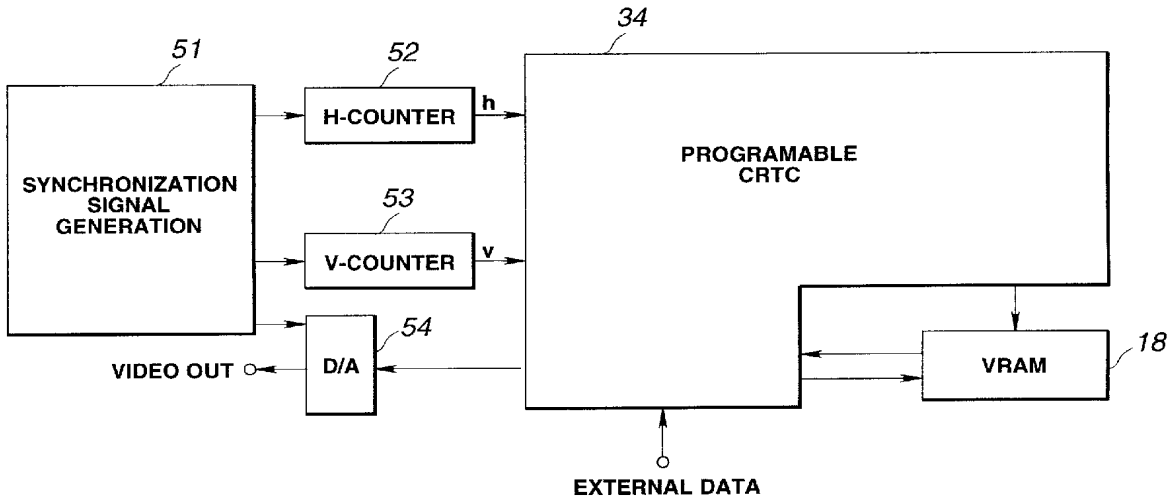
51
52
34
SYNCHRONIZATION SIGNAL GENERATION
H-COUNTER
h
PROGRAMABLE CRTC
53
V-COUNTER
v
54
VIDEO OUT
D/A
VRAM
18
EXTERNAL DATA

FIG.5

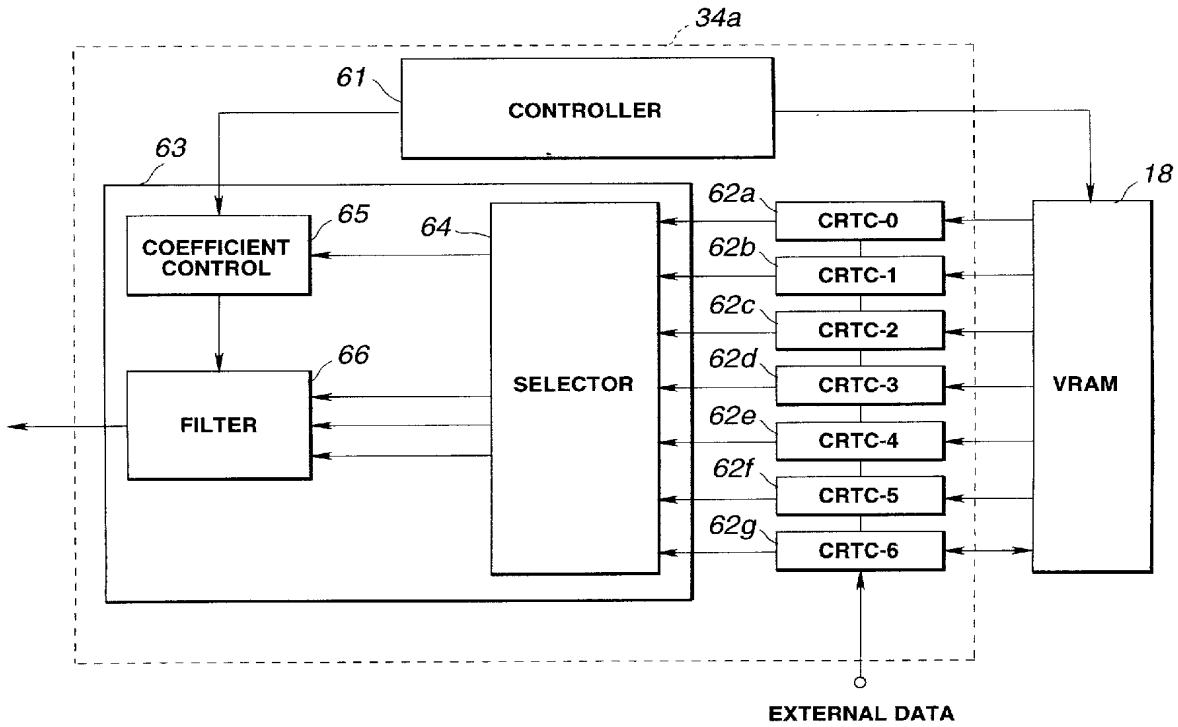
34a
61
CONTROLLER
63
18
62a
CRTC-0
65
64
COEFFICIENT CONTROL
62b
CRTC-1
62c
CRTC-2
66
62d
CRTC-3
SELECTOR
VRAM
FILTER
62e
CRTC-4
62f
CRTC-5
62g
CRTC-6
EXTERNAL DATA

FIG.6

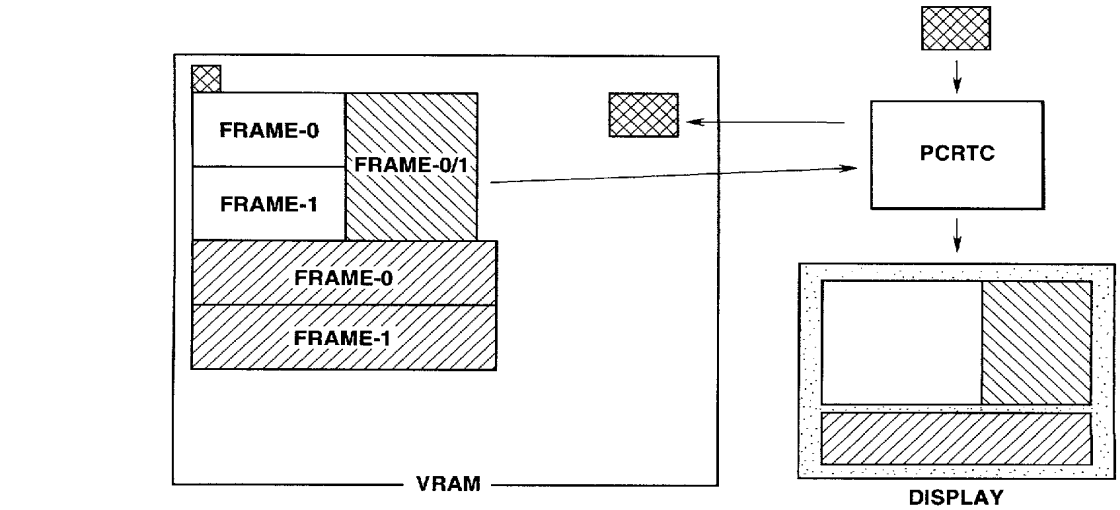
FRAME-0
FRAME-0/1
FRAME-1
FRAME-0
FRAME-1
VRAM
PCRTC
DISPLAY
=
+
LOW RESOLUTION DUAL BUFFER (1/30)
HIGH RESOLUTION SINGLE BUFFER :UPDATE DURING BLANKING PERIOD IF NECESSARY
HIGH RESOLUTION DUAL BUFFER (1/60)
CYCLIC BUFFER (TILE)
TEXTURE DATA :UPDATE VIA EXTERNAL BUS (SUB)

FIG.7

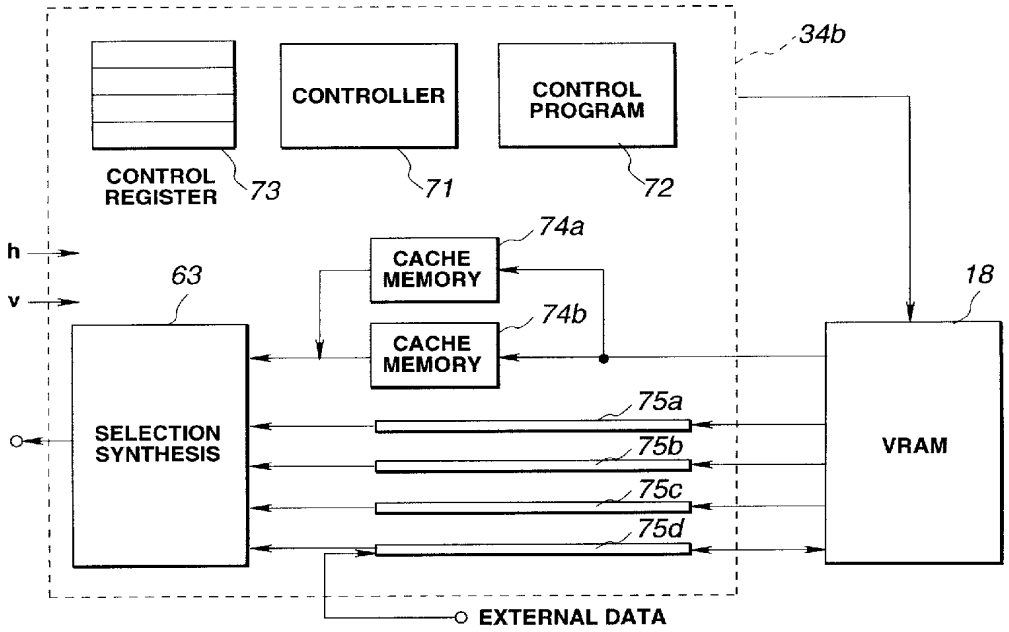
34b
CONTROLLER
CONTROL PROGRAM
CONTROL REGISTER
73
71
72
74a
h
v
63
CACHE MEMORY
74b
CACHE MEMORY
18
SELECTION SYNTHESIS
75a
75b
75c
75d
VRAM
EXTERNAL DATA

FIG.8

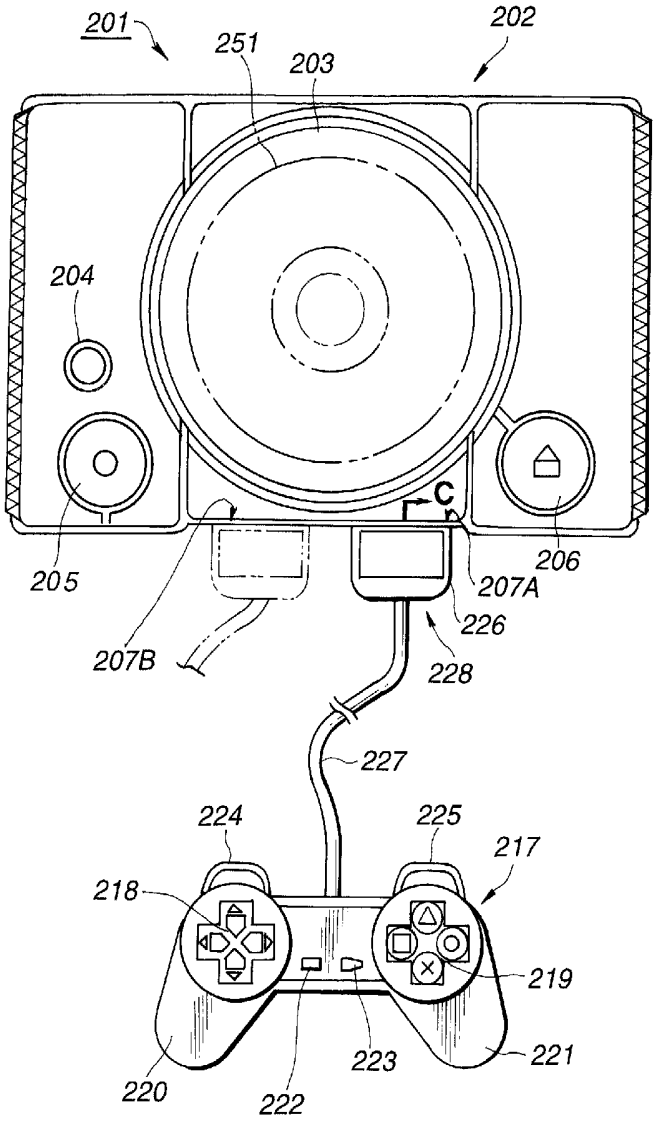
201
251
203
202
204
205
C
206
207A
207B
226
228
227
224
225
217
218
219
221
220
222
223

FIG.9

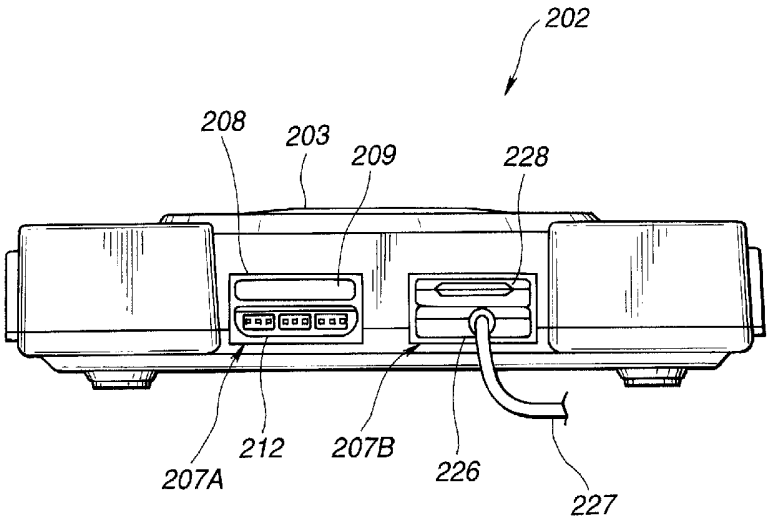

FIG.10

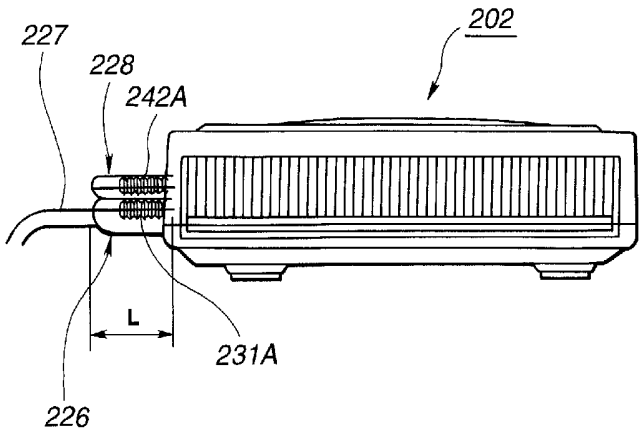

FIG.11

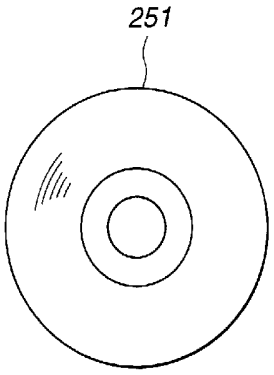

FIG.12