May 14, 1929. F. NEPPER 1,712,514

TYPEWRITING MACHINE

Filed Jan. 14, 1927 4 Sheets-Sheet 1

FIG. 1

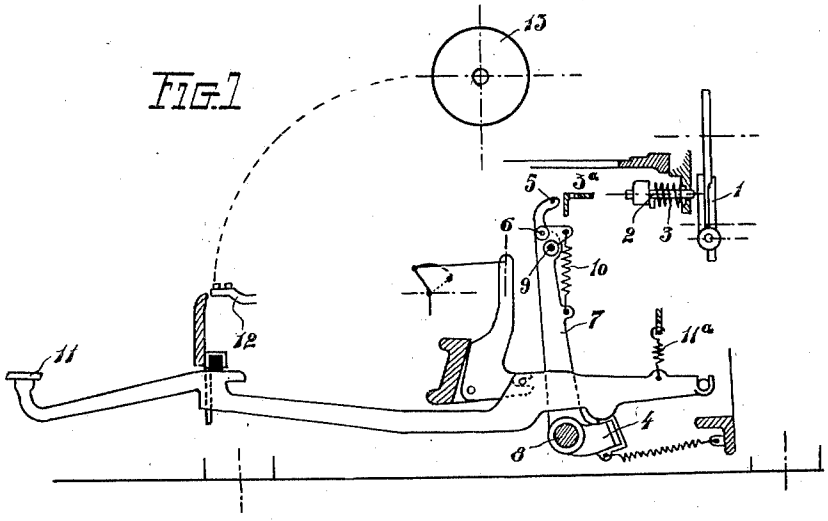

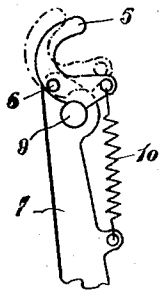

FIG. 2.

Inventor:
Fernand Nepper
By [signature]
Attorney.

May 14, 1929. F. NEPPER 1,712,514

TYPEWRITING MACHINE

Filed Jan. 14, 1927 4 Sheets-Sheet 2

Fig. 3

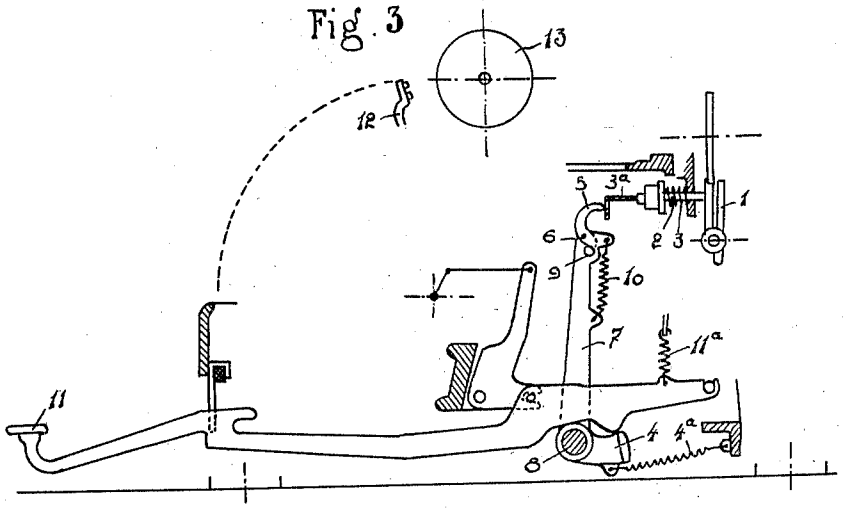

Fig. 4

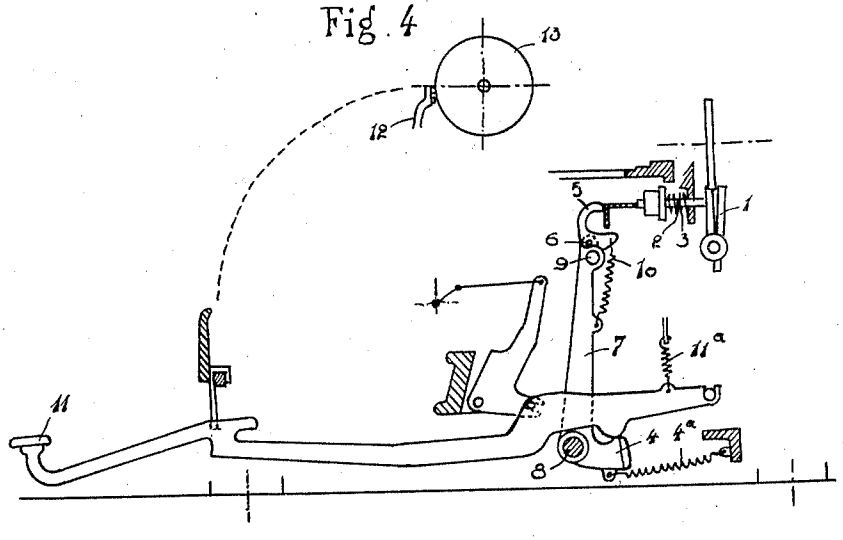

Inventor:
Fernand Nepper
By Louis Poirier & Co
Attorney.

May 14, 1929. F. NEPPER 1,712,514

TYPEWRITING MACHINE

Filed Jan. 14, 1927 4 Sheets-Sheet 3

Fig. 5

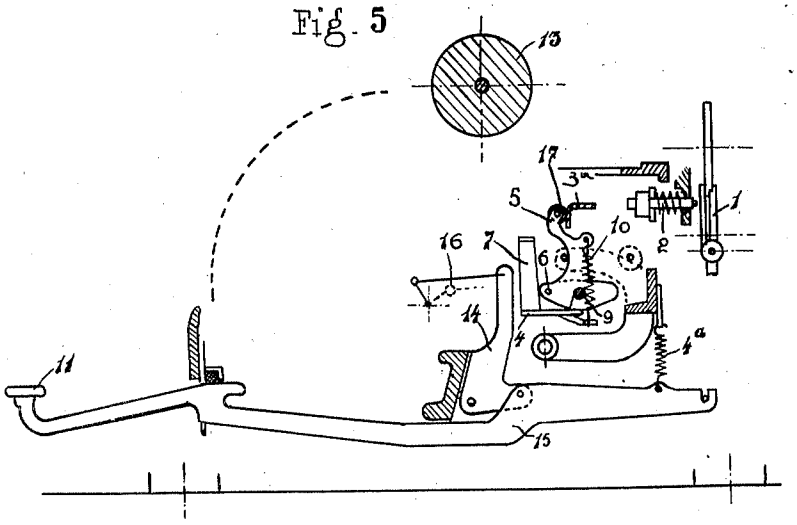

Fig. 6.

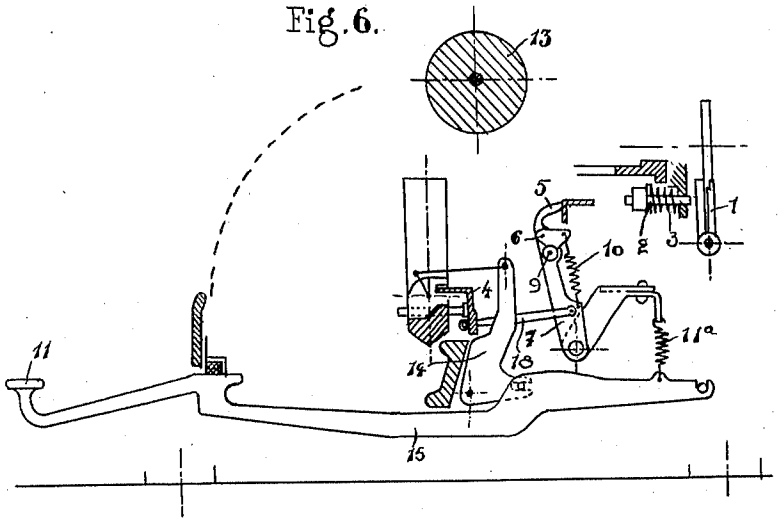

Inventor:
Fernand Nepper
By Louis Poirier
Attorney.

May 14, 1929. F. NEPPER 1,712,514

TYPEWRITING MACHINE

Filed Jan. 14, 1927 4 Sheets-Sheet 4

Fig. 7.

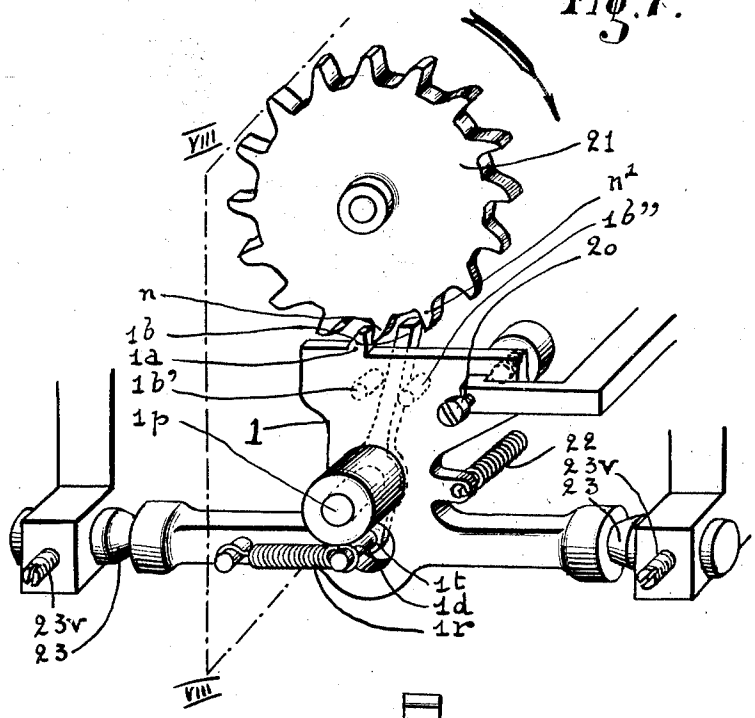

Fig. 8.

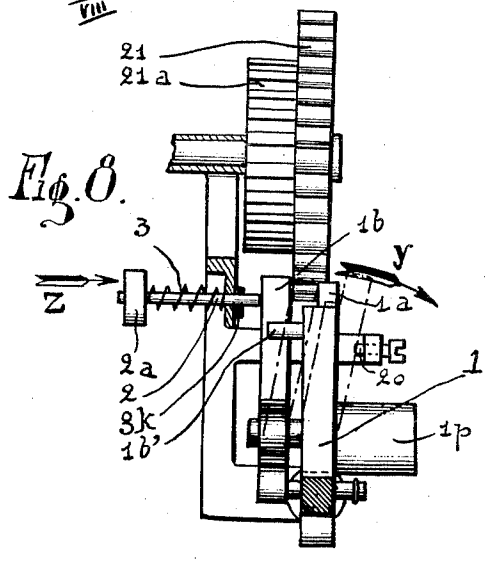

Inventor:
Fernand Nepper
By Emil Bönnelycke
Attorney

Patented May 14, 1929. 1,712,514

UNITED STATES PATENT OFFICE.

FERNAND NEPPER, OF BRUSSELS, BELGIUM.

TYPEWRITING MACHINE.

Application filed January 14, 1927, Serial No. 161,164, and in France January 20, 1926.

The present invention relates to the escapement action of typewriting machines, and it consists more particularly in the provision of an improved differential device which permits the escapement to be actuated a little before the key struck has completed its movement.

For this purpose the movable mechanism actuated by the universal bar and adapted to operate the spring pusher or plunger actuating the dog rocker, comprises a pivoted finger provided with a return spring which is tensioned at the end of the travel of the key.

This differential device, which is of very simple construction, considerably improves the typewriting machine as regards the speed and accuracy of the writing. Not only are the type bars made to travel at a higher speed, and the escapement actuated at a more favorable moment, but the touch remains light and pleasant.

The following description, with reference to the accompanying drawings, given by way of example, will enable the manner in which the invention is carried into effect to be clearly understood.

Figure 1 is a diagrammatic side view showing the invention applied to one form of typewriting machine, with the parts in the position of rest.

Figure 2 is a detail view of the pivotally mounted finger and its return spring.

Figures 3 and 4 are similar views to Figure 1, showing the machine at the moment when the escapement is actuated at the end of travel of the key.

Figures 5 and 6 show the application of the device to machines other than the form represented in Figure 1.

Figure 7 is a somewhat diagrammatic perspective view of the escapement mechanism on a greatly enlarged scale, and Figure 8 is a section on line 8—8, Figure 7.

In most typewriting machines, the application of a pressure on one of the keys of the keyboard causes the universal bar to be actuated, either by the key levers, or by the transmission or sub-levers, or by the type bars, and in its turn (independently of any other function it may perform) it acts upon the dog rocker of the escapement by means of a suitable mechanism.

It will be seen from Figure 1 that the dog rocker 1 is adapted to be swung or pushed inwardly or toward the rear of the machine by a rod or plunger 2 acted on by a spring 3 and mounted upon the frame of the machine, the displacement of the push rod being produced by means of the cross bar 3^a shifted by an arm or other member actuated by the universal bar 4.

According to the invention, the cross bar 3^a, instead of being actuated by a rigid member, is actuated by a finger 5 pivoted at 6 upon a lever or arm 7, itself pivoted at 8 and rocked toward the rear of the machine at each displacement of the universal bar 4.

In the position of rest, the finger 5 is held pressed upon a tappet 9, provided on the lever 7, by a return spring 10.

The tension of this spring is designed to overcome the resistance of the mechanism to be actuated, corresponding to the displacement of the cross bar 3^a and the inward movement of the push rod 2. However, as soon the dogs of the escapement have travelled a sufficient distance they are stopped, in the manner subsequently explained, by a stop 20 in the position shown in Fig. 3 in which the key 11 has almost completed its movement, that is to say, with the type bar head 12 near the cylinder or platen 13. In other words, the dog rocker is not actuated to move the dog which is engaged with a tooth of the escapement wheel, out of contact with said tooth, until the type bar head has almost reached the printing point.

It will be understood that at this moment the member 5 pivots about the pin 6, tensioning the spring 10, until the key completes its movement (position shown in Fig. 4). As soon as the key is released the action of the spring 10 is added to that of the spring 3 of the push rod 2, the spring 11^a of the key lever and the spring 4^a of the universal bar, which springs conjointly tend to return the type bars more rapidly than in machines existing at the present time.

As shown in Figures 7 and 8, the rocker 1 carrying the dogs 1^a and 1^b swings about an axis determined by two bearing points 23 which are movable endwise and can be fixed in position by means of screws 23^v. The dog 1^b is pivoted at 1^p on the rocker and is subjected to the action of a return spring 1^r that acts on a finger 1^d rigidly attached to the dog 1^b and movable in an opening 1^t in the rocker.

When pressure is applied upon the head 2^a of the push rod 2 in the direction of arrow

Z, the spring 3 associated with the push rod is compressed and the rod causes the dog rocker 1 to turn about its axis of oscillation in the direction of arrow Y until dog 1^a contacts with the previously-mentioned stop 20, at the same time tensioning the spring 22 which returns the rocker. In consequence of this movement, the dog 1^a disengages the tooth n of the ratchet wheel 21 and the dog 1^b engages in the space between said tooth n and the next tooth n^1. The ratchet wheel 21 is fixed to a pinion 21^a which, as usual, meshes with the platen carriage rack (not shown), the latter being pulled toward the left in the ordinary way by the usual carriage spring, such pull constantly tending to turn the ratchet wheel in the direction of arrow X.

Immediately the dog 1^a releases tooth n, the said ratchet wheel turns, and its tooth n^1 engages dog 1^b (which has been brought into its path) and forces it to swing about its pivot 1^p, thereby stretching spring 1^r, until said dog strikes against a stop $1^{b'}$. This stop $1^{b'}$ is so positioned that the working face of the dog 1^b is stopped at a slight distance from that of dog 1^a, the latter being situated at that instant outside or beyond the plane of the ratchet 21, as represented in dotted lines in Figure 8.

When the pressure exerted on push rod 2 is removed, the rod is returned by its spring 3 to its initial position, the expansion of said spring being limited by means of a stop 3^k. The dog rocker 1 is itself returned by spring 22; the dog 1^b disengaging the tooth n^1 at the very moment when dog 1^a has been brought into the plane of the ratchet wheel, so that said tooth n^1, due to the constant tendency of the wheel to turn clockwise (Figure 7), strikes against the working face of dog 1^a, which is positioned slightly in front of the plane of the working face of dog 1^b. The dog 1^b, immediately it leaves the plane of the ratchet, is itself returned to its initial position by the spring 1^r whose expansion is limited by the stop $1^{b''}$. The various parts are thus restored to their original position, and the ratchet wheel turns one step forward when pressure is again imposed, in the direction of arrow Z, on push rod 2.

It will be seen that this device for actuating the escapement is applicable to all forms of typewriting machines and that it is sufficient to fit the finger 5 with its return spring upon the parts of the escapement controlling mechanism in order to obtain the result mentioned above.

In Figs. 5 and 6, two forms of pivoted finger are shown by way of example. In these figures the parts corresponding to similar parts in Fig. 1 have been designated by the same reference numerals.

Fig. 5 shows the device forming the subject of the invention fitted upon a machine having the universal bar acted on by the transmission or sub-levers.

The lever 7 is an arcuate element of angle-section placed behind the transmission or sub-levers 14. As soon as a key 11 on the keyboard is pressed down, the transmission lever 14 corresponding to this key swings backwards in the machine, being actuated by the key lever 15. In moving, the transmission lever 14 actuates the type bar, which is not completely shown in the drawing, and moves it towards the platen by means of a link 16. The transmission lever meets the rocker 7 and swings it backwards. The finger 5 is mounted on a pivot 6 riveted to a vertical lug on the universal bar 4 to which the rocker 7 is secured, and a spring 10 keeps said finger in contact with the adjustable eccentric stop 9. The end of the finger 5 carries a pivot upon which is adapted to rotate the roller 17 and it is by the contact of the roller 17 with the cross-bar 3^a that the movement of the universal bar is transmitted to the mechanisms to be actuated, which are similar to the preceding mechanisms.

The same operations described in reference to the use of the device on the machine shown in Figs. 1 to 4 are reproduced exactly in the case shown in Fig. 5.

Figure 6 shows the application of the device according to the invention to machines having the universal bar acted on by the type bars.

The universal bar 4 is an arcute member or part of angle-section placed upon the type bar segment. As soon as a key on the keyboard is pressed down, the lowered key lever 15 actuates an intermediate lever 14 which moves the type bar towards the platen 13. The type bar moves the universal bar 4 backwards. The latter, by means of a link 18, actuates the centrally-located rocking arm or lever 7, at the upper end of which are arranged the previously-described finger 5 and spring 10. All the mechanisms of the machine are actuated by the pressure exerted by the finger 5 which may terminate in a roller such as the one shown at 17 in Fig. 5. The operations already described are reproduced exactly as before.

What I claim is:

1. In a typewriting machine, a universal bar, an interponent actuated thereby, an escapement actuated by said bar through said interponent slightly before the end of travel of a key, and a pivoted member on said interponent adapted to actuate said escapement and then yield under resilient control up to the end of travel of said key.

2. In a typewriting machine, a universal bar, an interponent actuated thereby, an escapement actuated by said bar through said interponent slightly before the end of travel of a key, a pivoted member on said interponent adapted to actuate said escapement

and then yield under resilient control up to the end of travel of said key, and a roller on said pivoted member.

3. In a typewriting machine, a universal bar, an interponent actuated thereby, an escapement including escapement dogs, a push member operated by said interponent for actuating the dogs, a pivoted member carried by the interponent, and a spring connected between said interponent and said pivoted member for returning the latter to a position of rest, said spring adapted to be stressed at the end of the travel of a key and thus permit the actuation of the escapement slightly before the end of the travel of a key.

4. In a typewriting machine, a universal bar, an arm actuated by said bar, a pivoted member on said arm, a spring connected between said arm and said member for returning the latter to a position of rest, a movable cross-bar, an escapement including escapement dogs, and a push member for actuating said dogs; said pivoted member being adapted to actuate said push member, through said cross-bar, so as to actuate the escapement slightly before the end of travel of a key and to pivot and thus stretch said spring at the end of the travel of said key.

In testimony whereof I affix my signature.

FERNAND NEPPER.