United States Patent

Abreu et al.

[15] **3,654,654**

[45] **Apr. 11, 1972**

[54] CLEANING APPARATUS

[72] Inventors: **Christian O. Abreu**, East Rochester; **John S. Bernhard**, Pittsford; **Henry T. Chiavaroli**, Henriette, all of N.Y.

[73] Assignee: **Xerox Corporation**, Rochester, N.Y.

[22] Filed: **Nov. 14, 1969**

[21] Appl. No.: **876,817**

[52] **U.S. Cl.** **15/1.5**

[51] **Int. Cl.** **B08b 1/02**, A47l 13/40

[58] **Field of Search** ..... 15/1.5, 3, 4, 100, 102, 256.5, 15/256.51, 256.52, 98, 103.5, 52; 118/70, 637 T; 134/1, 9, 6; 8/158; 355/15; 317/262 A; 95/1 A

[56] **References Cited**

UNITED STATES PATENTS

2,027,611	1/1936	Niks	15/256.5
2,218,249	10/1940	Nadeau et al.	118/70
2,731,916	1/1956	Koch	15/256.52
2,967,119	1/1961	Gutterman	15/100
2,987,660	6/1961	Walkup	317/262 A
3,099,856	8/1963	Eichorn et al.	15/256.51
3,309,993	3/1967	Grembecki et al.	15/4

Primary Examiner—Leon G. Machlin

Attorney—James J. Ralabate, David C. Petre and Barry J. Kesselman

[57] **ABSTRACT**

A cleaning mechanism for cleaning surfaces of contaminants. The apparatus has a sponge-like member that rotates in contact with the surface to be cleaned. A liquid is sprayed into the sponge-like member to help remove contaminants from the surface to be cleaned. The sponge-like member is squeezed by a hard roller to remove excess liquid and contaminants so that it may be recycled to continually clean the surface. The unit is housed in a mechanism that has provisions for draining the liquid without wetting other portions of the machine in which the mechanism is housed. A further option incorporates a wiper web and wiper blade surface contacting means operating in conjunction with the sponge-like member.

17 Claims, 1 Drawing Figure

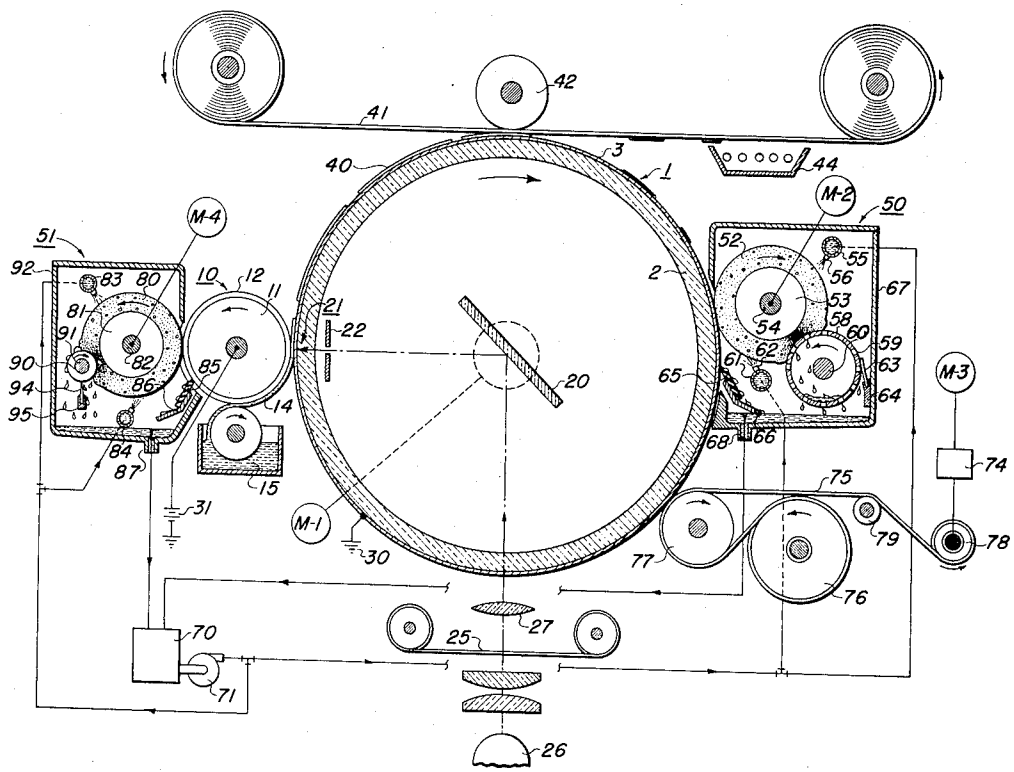

PATENTED APR 11 1972

3,654,654

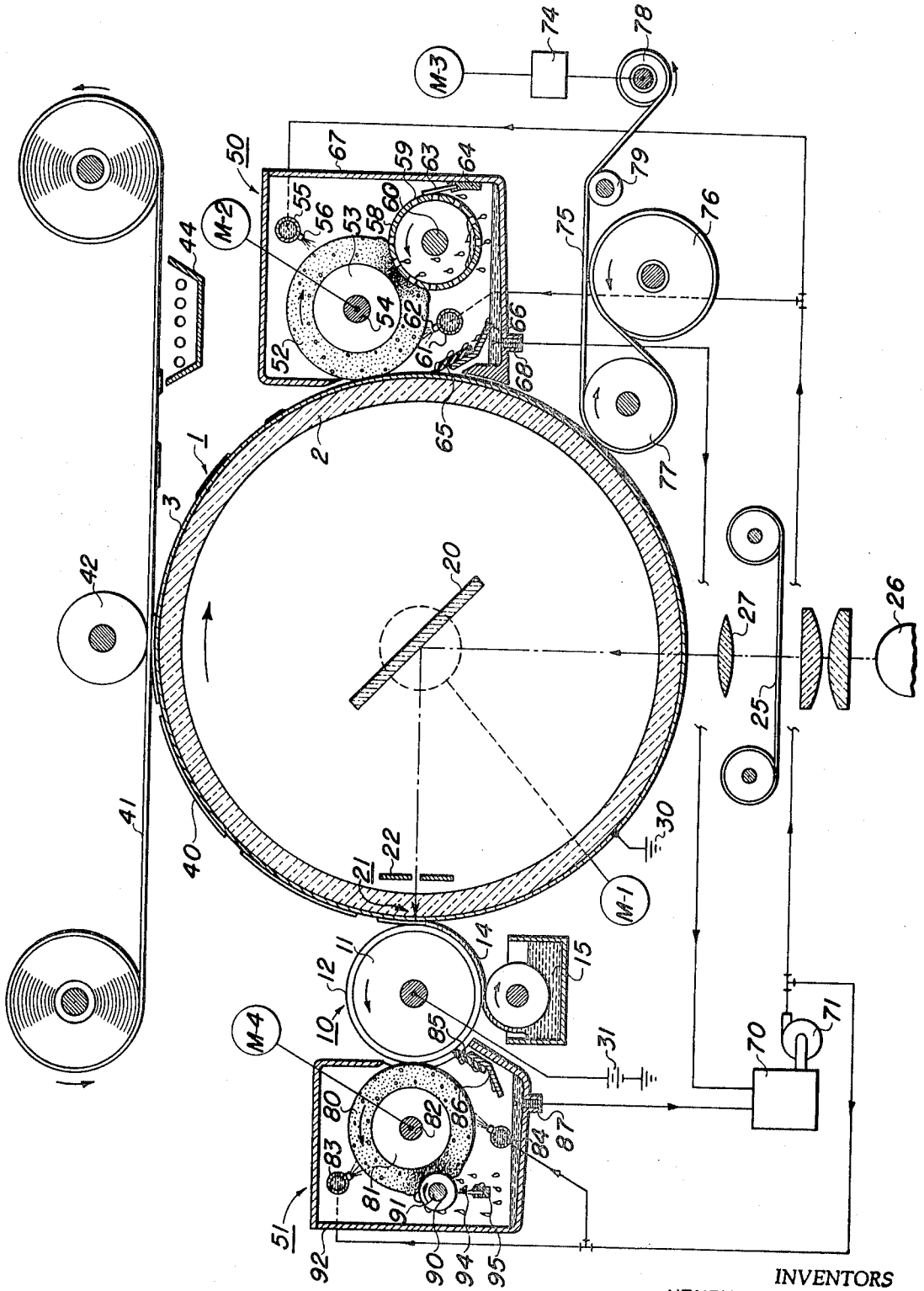

INVENTORS
HENRY T. CHIAVAROLI
JOHN S. BERNHARD
CHRISTIAN O. ABREU

BY Barry Jay Kramer
ATTORNEY

CLEANING APPARATUS

This invention relates to cleaning systems and more particularly to apparatus for removing contaminants from a surface.

Recently, new systems were disclosed for forming back and white or full color images through the use of photoelectrophoresis. The inventions are described in U.S. Pat. Nos. 3,384,565; 3,384,566 and 3,383,993 which show systems where photoelectrophoretic particles migrate in image configuration providing a visual image at one or both of two electrodes between which the particles are placed in suspension. The particles are photosensitive and apparently undergo a net change in charge polarity or a polarity alteration by interaction with one of the electrodes upon exposure to activating electromagnetic radiation. The particles, under the influence of an electric field and when struck with energy of a wavelength within the spectral response of the colored particles will migrate from one of the electrodes toward the other.

Apparatus has been invented to better utilize the above process. U.S. Pat. No. 3,427,242 describes a continuous apparatus embodiment of the above process. The apparatus there shown as well as other apparatus operates more effectively if the electrode surfaces used for supporting suspensions and transferable images are cleaned of residual pigment material after the imaging or transfer to a suitable support sheet. However, it has been found to be difficult to clean the electrode surfaces used in the above described apparatus for removing sufficient quantities of pigment particles to prevent interference with later images being formed by the same electrodes.

Therefore, it is an object of this invention to improve apparatus for the cleaning surfaces. Another object of this invention is to improve the removal of electrophoretic particles from surfaces.

A further object of this invention is to improve cleaning of members of automated imaging machines. Still another object of this invention is to improve removal of contaminants automatically and continuously without the need for manual interaction.

These and other objects are accomplished by providing a sponge-like contacting member in moving contact with surface to be cleaned. If the contaminants are unipolar, an electrical bias can aid in their removal. Fluids are added continuously to the moving sponge-like member for loosening the contaminants on the surface to be cleaned. The contaminated fluid packed member moves past and is squeezed by a hard roller to remove the fluids and contaminants from the sponge-like material. The surface cleaned is contacted by a cleaning web to dry and further clean it.

The invention herein is described and illustrated in a specific embodiment having specific components listed for carrying out the functions of the apparatus. Nevertheless, the invention need not be thought of as being confined to such a specific showing and should be construed broadly within the scope of the claims. Any and all equivalent structures known to those skilled in the art can be substituted for specific apparatus disclosed as long as the substituted apparatus achieves a similar function. It may be that other processes or apparatus will be invented having similar needs to those fulfilled by the apparatus described and claimed herein and it is the intention herein to describe an invention for use in apparatus other than the embodiment shown.

Dr

The above objects and advantages will become apparent to those skilled in the art after reading the following description taken in conjunction with the accompanying drawings of a schematic side section illustration of two embodiments of the invention in a continuous processing apparatus environment for forming photoelectrophoretic images.

The figure shows a rotary transparent electrode **1** in the form of a drum which is made up of a layer of optically transparent glass **2** carrying on its outer surface an optically transparent, any electrically conductive layer **3**. The electrode can be formed of any electrically conductive, transparent material

such as NESA glass which is the trade name of a commercially available tim oxide coated glass. The rotary electrode is referred to as the injecting electrode.

The "injecting electrode" is so named because it is thought to inject electrical charges into activated photosensitive particles during imaging. The term "photosensitive" for the purposes of this description refers to the property of a particle, which once attracted to the injecting electrode, will alter its polarity and migrate a way from the electrode under the influence of an applied electric field when exposed to activating electromagnetic radiation. The term "suspension" may be defined as a system having solid particles dispersed in a solid, liquid or gas. Nevertheless, the suspension used in the embodiment of this invention described herein is of the general type having a solid suspended in a liquid carrier. The term "imaging electrode" used hereinafter describes that electrode which contacts the injecting electrode through the imaging suspension and which when contacted by activated photosensitive particles will not inject sufficient charge into them to cause them to migrate from the imaging electrode.

In close proximity to the injecting electrode **1** and mounted on an axis parallel to the axis of that electrode is a rotary imaging electrode roller **10**. It has a central core **11** which is preferably of fairly high electrical conductivity and a layer of blocking electrode material **12** which may be, for example, Tedlar or baryta paper, covering the core to prevent electrical charge injection from the imaging electrode to the particles contacting it.

During the imaging process, a thin suspension layer **14** of finely divided photosensitive particles dispersed in an insulating liquid carrier is supplied from a reservoir **15** to the surface of the imaging electrode **10**. Within the rotary injecting electrode **1** is a stationary mirror **20** which receives light rays projected from a transparent object **25** to be copied. It reflects image rays through an exposure slit **22** and onto the surface of the suspension at the imaging zone **21** where the injecting electrode **1** interfaces with the imaging electrode **10**. The transparency **25** that is to be imaged passes under a light source **26**. The image is projected in synchronized flowing movement by a lens **27** onto the surface of the suspension at the imaging zone **21**.

The injecting electrode **1** is grounded by a connection **30** and the imaging electrode is connected with a potential source **31** which is in turn connected to ground. The polarity of the charge on the imaging electrode **10** is opposite to that of the polarity that is carried on the surface of the injecting electrode **1**. During imaging, drive means M-1 rotate the imaging electrode **10** in rolling interface with the injecting electrode **1** thereby carrying the imaging suspension containing the photosensitive particles into contact with the surface of the injecting electrode **1** at the site of projection of the image from the transparency **25**. The exposure under the electrical field conditions causes selective particles to migrate through the liquid carrier and adhere to the surface of the rotating imaging electrode **10** leaving a positive particle image on the surface of the injecting electrode **1**.

The image **40** on the surface of the injecting electrode **1** downstream from the imaging zone **21** is carried to contact an adhesive copy web **41** which is pressed up against the drum surface by transfer roller **42**. The web **41** moves at the same velocity as the periphery of the injecting electrode **1**. The transfer roller **42** is positioned behind the web **41** and aids in the transfer of the image from the electrode **1**. Thus, the image is adhesively transferred from the surface of the injecting electrode onto the surface of the copy web. The image on the copy web may be permanently affixed thereto in a fixing unit **44**. Transfer may also occur through other known techniques without departing form the scope of the invention.

Since the transfer does not remove all of the particles from the injecting electrode **1** and since it is necessary in this process to maintain particles on the imaging electrode **10**, it is also necessary to clean the surfaces of the electrodes. For this purpose two cleaning mechanisms **50** and **51** are shown em-

bodying this invention to clean the surfaces of the imaging and injecting electrodes respectively.

The cleaning mechanism **50** is used to remove residual materials (generally pigment particles in the illustrative environment) from the injecting electrode surface. The cleaning roll **52** is an open cell sponge-like member, made for example, of polyurethane foam or any other suitable sponge-like materials that are unaffected by the cleaning fluids. It is mounted on a solid or tubular inner core **53** held in turn on a shaft **54** which is rotated by a motor M-2 to move in the opposite direction from the surface of the injecting electrode. A tube **55** with a nozzle **56** on it pointing at the cleaning roller **52** sprays liquid onto the outer surface of the roller. A pinch roll **58** having large perforations **59** therein is mounted on a shaft **60** in interference contact with the sponge-like cleaning roller **52**. Because of the interference, the sponge-like material is squeezed almost to a solid non-porous mass in the pinch between the core **53** and the periphery of the pinch roll **58**. The pinch roll **58** rotates because of the contact with the moving cleaning roll **52**.

A second sprayer **61** with a nozzle **62** also pointed at the cleaning roller adds fresh fluid to the roller prior to its contacting the surface **3** of the injecting electrode. A wiper blade **63** is positioned within a bracket **64** to contact the surface of the perforated pinch roll **58** to prevent liquids from riding completely around the surface and recontacting the sponge-like material of the cleaning roll **52**. The blade can be rubber, polyurethane or any other suitable resilient material which is resistant to the fluids and chemicals used. A wiper blade **65** of the same material as the wiper blade **63** contacts the surface of the injecting electrode along its path downstream from the contact position with the cleaning roll **52**. This wiper blade **65** dries the surface of the injecting electrode by removing the liquids remaining thereon after contact by the cleaning number **52**. The wiper blade **65** is mounted in a bracket **66** held within the housing **67** containing the first part of the cleaning unit **50**.

The perforated pinch roll **58** is preferably located below the horizontal center line of the sponge-like roll **52**. This aids in removing materials from the cleaning roll **52** after it has been pinched by the perforated pinch roll **58**. If the perforated pinch roll **58** were above the center line of the cleaning roll, some of the liquid it squeezes from the cleaning roller **52** would tend to fall back on the cleaning roll which may cause particles floating in the liquid to recontaminate the surface of the sponge-like roll **52**.

A drain **68** in the housing **67** provides a run-off for the contaminated liquid pinched out of the cleaning roll **52**. This liquid is pumped to a filter **70** by a pump **71** where the particles are removed and the liquid is returned to the sprayers **55** and **61** for reuse within the system.

Located along the path of movement of the injecting electrode downstream from the portion of the cleaning mechanism described above is a disposable web cleaner. A disposable fibrous web **75** is unwrapped from a supply spool **76** and pressed into contact with the surface **3** of the injecting electrode by a pressure roll **77** and eventually wound on a takeup spool **78** by a motor M-3. The web movement is slow and may be continuous or sporatic. It is controlled by a programmer **74** which is present to move the web **74** before its fibers become saturated with liquid from the surface **3**. An idler roll **79** maintains a more desirable path for the web **75** to travel and insures tension uniformly. The web **75** gives a further assurance of drying the surface **3** of the injecting electrode **1**.

The cleaning mechanism **51** used to clean the imaging electrode **10** is similar to a large extent in concept and design to the structure described in the cleaning mechanism **50**. The sponge-like cleaning roller **80** is mounted on a solid or tubular core **81** and journaled for rotation about a shaft **82** which is driven by a motor M-4 for rotation in the direction indicated by the arrow. Sprayers **83** and **84** function through nozzles in the manner described with the cleaning mechanism **50**. Likewise, the wiper blade **85** held in the bracket **86** functions in the manner described for the wiper blade **65** of the cleaning mechanism **50**. The liquids squeezed out of the sponge-like material of the cleaning roller **80** are removed through a drain **87** to the filter **70** to be pumped by the pump **71** back through the sprayer heads **83** and **84**. The difference in the structure shown in the cleaning mechanism **51** from the cleaning mechanism **50** is that the pinch roll **90** is a small diameter solid roll journaled for rotation within the housing **92**. The small rod **90** is driven by pressure contact with the cleaning roller **80**. All or most of the liquid and particles within the sponge-like roller are removed when the pinch roller **90** compresses the material virtually squeezing the pores down to a solid, non-porous condition.

The roll **90** is formed of a hard material such as steel or aluminum and is generally about one-half inch in diameter or thereabouts. For best results the roller should be contacting the sponge-like cleaning roller **80** below the horizontal center line of the roller so that liquids forced out of the sponge-like material are not likely to fall back onto the cleaning roller **80** because of gravity. To aid in removing the liquid from the pinch roll **90** before it travels around the periphery thereof, a wiper blade **94** housed in a bracket **95** contacts the surface of the pinch roll **90**. The positioning of the wiper blade **94** is below the contact between the roll **90** and the cleaning roll **80** in order to prevent liquids from traveling 360° around the pinch roll **90**.

While this invention has been described with reference to the structures disclosed herein and while certain theories have been expressed to explain the experimentally obtainable results obtained, it is not confined to the details set forth; and this application is intended to cover such modifications or changes as may come within the purposes of the improvements or the scope of the following claims.

We claim:

1. Apparatus for cleaning a surface including

a sponge-like member rotatable against the surface at a contact position;

a pinch member for squeezing the sponge-like member at a second position removed from the contact position;

drive means to positively move said sponge-like member along the path through the contact position and past said pinch member;

means to spray a liquid to the sponge-like member along the path at a third position located downstream from the contact position prior to said pinch member and further including a second means to spray a liquid to the sponge-like member along the path at a fourth position located downstream from the pinch member prior to the contact position of the sponge-like member with the surface.

2. The apparatus of claim **1** including, in combination,

means to couple said sponge-like member to an electrical source for enabling an electrical field between the sponge-like member and the surface.

3. The apparatus of claim **1** further including wiper means contacting the surface downstream from the contact position between the surface and said sponge-like member for removing liquids from the surface.

4. The apparatus of claim **1** wherein said wiper means includes, in combination a wiper blade and a disposable web means for contacting the surface and positioned such that the surface portions are contacted first by said blade and then by said web means.

5. The apparatus of claim **1** further including in combination, a pump;

first conduit means connecting said pump to said to spray;

means for collecting liquids from said sponge-like member;

means for filtering the liquids collected from said sponge-like member;

second conduit means to transport the filtered liquid to the pump.

6. Apparatus for cleaning a surface including

a sponge-like member rotatable against the surface at a contact position;

a pinch member including a perforated cylinder for squeezing the sponge-like member at a second position removed from the contact position wherein said perforated cylinder is positioned to contact the sponge-like member below the horizontal centerline thereof;

drive means to positively move said sponge-like member along a path through the contact position and past said pinch member;

means to spray a liquid to the sponge-like member along the path at a third position.

7. The apparatus of claim 1 further including a wiper member for contacting the pinch member at a position removed from the interface between said pinch member and the sponge-like member.

8. Apparatus for cleaning a surface including

a sponge-like member rotatable against the surface at a contact position;

a pinch member including a perforated cylinder interfacing with the sponge-like member for squeezing the sponge-like member at a second position removed from the contact position and a wiper member for contacting the perforated cylinder at a position removed from the interface of said perforated cylinder and the sponge-like member;

drive means to positively move said sponge-like member along a path through the contact position and past said pinch member;

means to spray a liquid to the sponge-like member along the path at a third position.

9. The apparatus of claim 1 wherein said pinch member is a roller adapted to move in rolling contact with said sponge-like member.

10. The apparatus of claim 1 further including:

a first electrode member for maintaining a layer of electrophoretic suspension; members;

another electrode member for contacting the suspension such that it is maintained between said electrode member;

means for applying an electric field across the suspension between the electrode members, and

means to expose the suspension between said electrode members to electromagnetic radiation wherein said surface for cleaning includes at least one of the electrode members.

11. The apparatus of claim 6 including means to couple said sponge-like member to an electrical source for enabling an electrical field between the sponge-like member and the surface.

12. The apparatus of claim 6 further including wiper means contacting the surface downstream from the contact position between the surface and said sponge-like member for removing liquids from the surface.

13. The apparatus of claim 6 wherein said pinch member is a roller adapted to move in rolling contact with said sponge-like member.

14. The apparatus of claim 6 further including:

a first electrode member for maintaining a layer of electrophoretic suspension;

another electrode member for contacting the suspension such that it is maintained between said electrode members;

means for applying an electric field across he suspension between the electrode members;

means to expose the suspension between said electrode members to electromagnetic radiation wherein said surface for cleaning includes at least one of the electrode members.

15. The apparatus of claim 8 including means to couple said sponge-like member to an electrical source for enabling an electrical field between the sponge-like member and the surface.

16. The apparatus of claim 8 including: a pump;

first conduit means connecting said pump to said means to spray;

means for collecting liquids from said sponge-like member;

means for filtering the liquids collected from said sponge-like member;

second conduit means to transport the filtered liquid to the pump.

17. The apparatus of claim 8 further including:

a first electrode member for maintaining a layer of electrophoretic suspension;

another electrode member for contacting the suspension such that it is maintained between said electrode member;

means for applying an electric field across the suspension between the electrode members;

means to expose the suspension between said electrode members to electromagnetic radiation wherein said surface for cleaning includes at least one of the electrode members.

* * * * *