HIGHLY-DRAFTED SINUSOIDAL PATTERNED NONWOVEN FABRIC LAMINATES AND METHOD OF MAKING SAME

Filed May 20, 1966 2 Sheets-Sheet 1

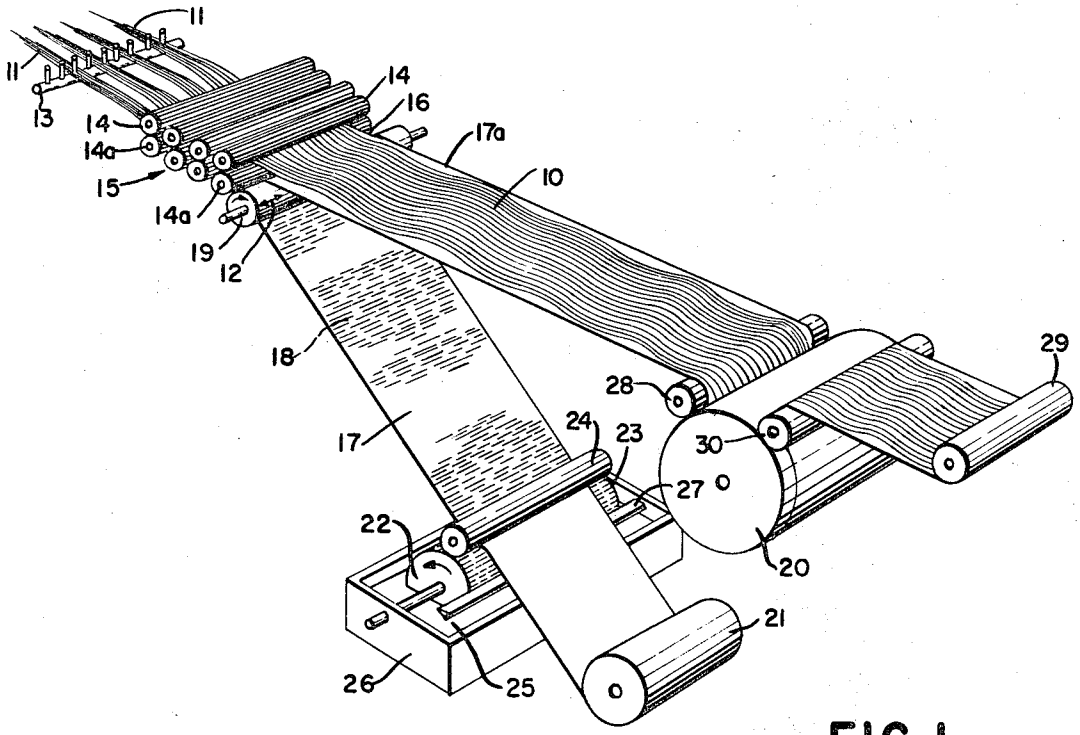

FIG. 1.

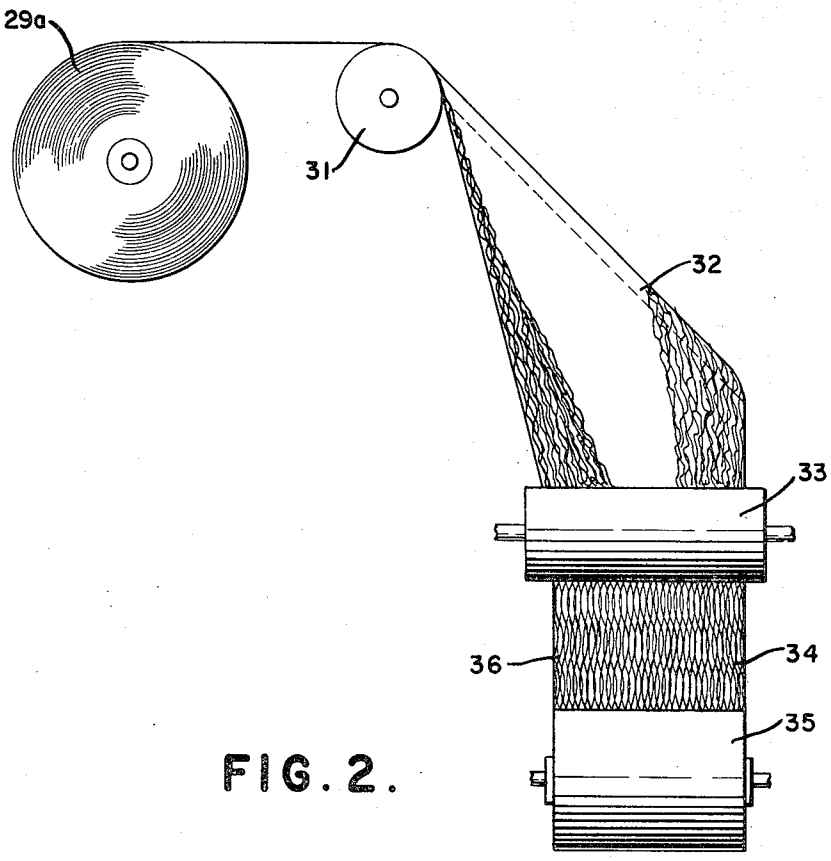

FIG. 2.

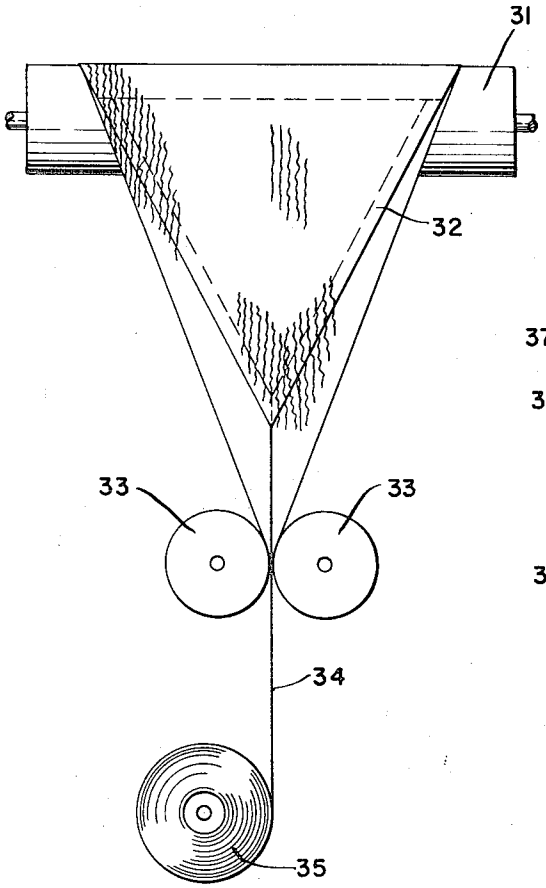

FIG. 3.

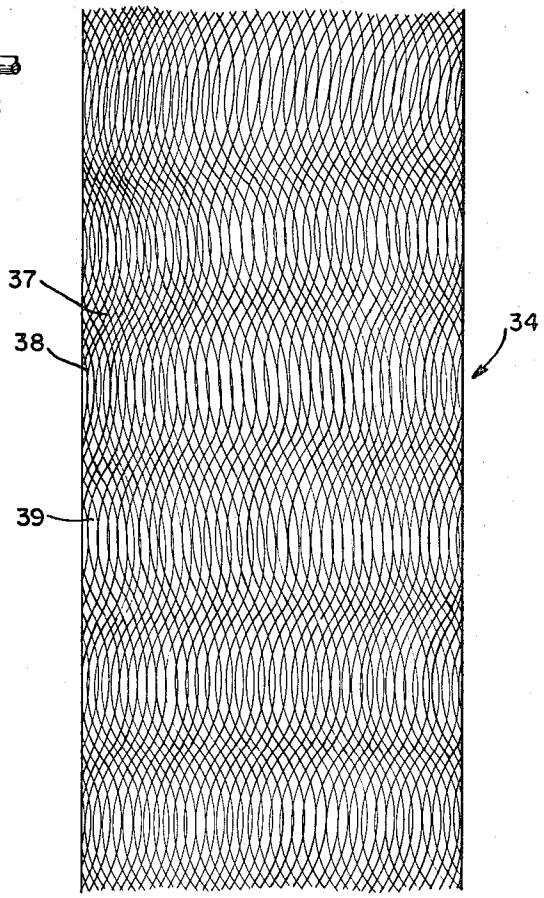

FIG. 4.

United States Patent Office

3,553,064

Patented Jan. 5, 1971

1

3,553,064

HIGHLY-DRAFTED, SINUSOIDAL PATTERNED NONWOVEN FABRIC LAMINATES AND METHOD OF MAKING SAME

Ronald H. Wideman, Menasha, Wis., assignor to Kimberly-Clark Corporation, Neenah, Wis., a corporation of Delaware

Filed May 20, 1966, Ser. No. 551,605
Int. Cl. B32b *5/12, 7/14;* D04h *1/74*
U.S. Cl. 161—59 15 Claims

ABSTRACT OF THE DISCLOSURE

A nonwoven fabric comprising at least one layer of highly-drafted, staple length fibers extended to substantially their full length and arranged in a sinusoidal pattern with the fibers embedded in and bonded by a spaced patterned layer of flexible adhesive to at least one layer of lightweight cellulose wadding and the method of making same are disclosed. Also disclosed is the method and product resulting from laminating two such nonwoven fabrics together wtih the fiber layers facing one another and with the sinusoidal pattern of fibers in the opposing layers out of phase with one another.

This invention relates to an improved process for the manufacture of nonwoven webs and to products obtained thereby. More specifically it relates to a process for forming a bonded nonwoven web from a lamination of highly-drafted fibers and a carrier sheet.

It is known that individual textile fibers may be drawn out and substantially aligned to form a thin web-like layer by passing an array of juxtaposed slivers of staple length fibers through a multiple roll draw frame. The layer of fibers discharged from such a device is flimsy, film-like and gossamer in character, and, to be useful in web form while still retaining its highly-drafted alignment, must be immediately bonded to each other by some means, or supported by and bonded to as supplementary web. Highly-drafted fiber webs have approximately 80% to 95% of the fibers oriented substantially in the longitudinal direction. As disclosed in U.S. Pat. No. 3,327,708, such a high degree of fiber alignment is desirable in that it contributes substantially to improved longitudinal strength properties per unit weight when compared with prior art carded fiber webs in which only about 50% to 70% of the fibers are longitudinally aligned. However, while this high degree of fiber alignment improves the longitudinal strength, the transverse strength of the resulting web is lessened because of the relative paucity of crossing fibers, even though the bonding means may comprise transverse lines of strong adhesive or the like. Ordinarily this problem may be overcome by cross-laying and bonding two such webs together whereby the strength in each direction is equalized as disclosed in copending Saunders et al. application Ser. No. 498,929, filed Oct. 20, 1965 and assigned to the same assignee as the present application. However, known cross-laying methods usually entail either costly or low-speed equipment, adding considerable expense to the cost of the finished product.

The present invention overcomes the latter difficulties and provides a drawn-fiber nonwoven web of high transverse strength without cross-laying.

Accordingly, a primary object of the invention is to provide a process for fabricating a nonwoven web having

2

improved cross-direction strength from a laminate of highly-drafted fibers and an integral carrier sheet.

Another object is to provide a laminated web in which at least one element is an array of highly-drafted and aligned fibers, and a second element comprises a carrier sheet to which the highly-drafted and aligned fibers are bonded in a regular sinusoidal pattern.

An additional object is to provide a laminated web comprised of multiple layers of highly-drafted substantially parallelized fibers arranged in a regular sinusoidal pattern combined with tissue carrier sheets.

Still another object is to provide a method for the economical, high-speed manufacture of webs of the character indicated.

Other objects and advantages will become apparent to persons skilled in the art upon examination of the following description and drawings.

In the drawings:

FIG. 1 is a diagrammatic view in persepective of a device suitable for carrying out one embodiment of the process of this invention.

FIG. 2 illustrates in side elevation a schematic arrangement for folding and further laminating the web produced by the device of FIG. 1.

FIG. 3 is a front elevation of the arrangement shown in FIG. 2.

FIG. 4 is a representation of the appearance of a laminated product fabricated as taught herein, when viewed by transmitted light.

In one embodiment of the invention, as shown in FIG. 1, multiple slivers of textile fibers **11** are drawn from their respective supply cans over a guide comb **13** in juxtaposed relationship into a draw frame **15** comprising a series of paired grooved rolls **14** and **14***a*. The rolls of each pair are driven by appropriate gearing, well known in the art, at a peripheral speed slightly faster than the rate of operation of the preceding pair to draw out and align the individual fibers from the slivers into substantially parallelized arrangement with the fibers extended to their full length. The drawn fibers are discharged from draw frame **15** in the form of a flat web **16** in substantially aligned arrangement. Web **16** is of such flimsy and gossamer-like character that it must be quickly deposited on a supporting carrier sheet **17** immediately after discharge from draw frame **15** in order to maintain its form. While other types of carrier sheets may be employed for this purpose, in the particular embodiment here shown and described, the carrier sheet **17** comprises a single ply of lightweight cellulose wadding which eventually becomes an integral part of the finished product. Wadding sheet **17** preferably has been stretched and ironed to facial tissue softness by known means to provide a like softness and hand to the finished product. However, for certain products stretching and ironing may not be desirable.

The wadding sheet **17** is drawn from supply roll **21** into a nip formed by a printing roll **22** and a back-up roll **24** maintained in very light pressure engagement with sheet **17**. In this case, the surface of printing roll **22** is provided with an intaglio pattern **23** which picks up adhesive **25** from dip pan **26**. Excess adhesive is scraped off by doctor blade **27**. The adhesive preferably is a low viscosity thermoplastic adhesive which remains substantially on the surface of the wadding in the form of the pattern selected.

The pattern shown on the drawing comprises parallel, discontinuous transverse lines in a brick-like design as shown at **18** merely for illustrative purposes, it being un-

derstood that the adhesive actually is on the underside of sheet **17** at this point. The printed sheet **17**, bearing adhesive **18** on its undersurface, is then drawn around roll **19** positioned adjacent the discharge end of draw frame **15** at which point the adhesive is on the upper surface and the drawn fiber web **16** is deposited thereon. Roll **19**, in addition to rotating in the direction shown, is also simultaneously oscillated transversely as indicated by double arrow **12**, by known means, such as by a mechanized Scotch yoke or similar device. Because wadding sheet **17** is flexible, the oscillating roll **19** can move the sheet back and forth transversely without tearing the sheet. The drawn fiber web **16** is discharged from the draw frame with the fibers aligned substantially in the direction of discharge. However, when the aligned fibers are deposited on the adhesive printed sheet **17***a*, the oscillating motion causes the web to take the form of a sinusoidal pattern shown at **10** while the fibers still remain substantially parallel to one another. The adhesive **18** has sufficient tack and viscosity to hold the fibers in alignment in spite of the oscillating movement. As a result, the sinusoidal pattern comprises individual fibers in a substantially parallel wave-like arrangement. While the sinusoidal pattern **10** is shown as parallel continuous lines, this showing is merely figurative. In reality, the web at this stage comprises a multiplicity of individual fibers aligned in side-by-side arrangement in the pattern illustrated by these continuous lines.

The combined sheet **17** and patterned fiber lay **10** is carried around guide roll **28** into prolonged contact with heated drum **20**. The heat fuses and cures the adhesive to a substantially nontacky condition while the fibers are in firm contact with the drum surface. To provide this curing effect, travel around a substantial portion of drum **20** as in the manner shown is desirable. The laminated web with the fibers partially embedded in the adhesive then passes under a pressure roll, or calender roll **30**, which presses the fiber layer more firmly into the adhesive to assure permanent attachment. The laminated web is subsequently wound up in a roll **29**.

The laminated product in roll **29** which comprises a drawn fiber web with the fibers arranged in an aligned sinusoidal pattern and adhesively bonded and laminated to a lightweight cellulose wadding sheet, has a limited number of uses without further processing, especially for uses where cross-direction strength is unimportant. However, a larger number of potential uses are obtained when the resulting sheet is further laminated to develop cross-direction strength.

One means of accomplishing this is shown in FIGS. 2 and 3. As shown in these figures, the laminated sinusoidal pattern material produced in the above-described manner is fed from supply roll **29***a* around guide roll **31**, over a conventional V-shaped folding board or frame **32**, between the nip of heated calender rolls **33**, bringing the fiber side of the material together in face-to-face contact to form laminated web **34** which is wound up into finished roll **35**. The heat and pressure from the calender rolls activates the adhesive causing portions, causing adhesive in one layer to intrude between the fibers in that layer to join the adhesive from the opposing layer whereby the laminated material is bonded together into a unitary web. Selvage edge **36** subsequently may be trimmed off.

While the preferred embodiment of the folded laminated material has the fiber surfaces disposed face-to-face, the material may also have the wadding surfaces face-to-face before calendering. However, the resulting product has less transverse strength than the preferred embodiment, probably because less adhesive migrates between layers to form bonds between sheets.

The appearance of the finished web **34**, when viewed by transmitted light, is shown in FIG. 4. The arrangement as illustrated might be defined as the overlapping of several parallelly-aligned vibrating strings in which the nodes **37** intersect and are bonded to each other, and the segments **38** and **39** overlie and cross each other at multiple points to form additional bonds. These multiple bonds form a diamond-like arrangement of fibers and adhesive and when force is exerted in a transverse direction provide flexible restraint and resilient cross-direction strength.

While the above-described process provides bonding between the sinusoidal array of drawn fibers and the underlying carrier sheet by means of a thermoplastic adhesive previously applied to the carrier sheet, another means of bonding may be used without materially disturbing the fiber alignment. In the latter case, a number of the slivers introduced into the draw frame may comprise thermoplastic fibers, or preferably, thermoplastic fibers may be mixed into each sliver. A large variety of such man-made fibers are now available including polyethylene, polypropylene, polyesters, polyacrylonitrile, polyvinyls, etc.

In one specific example, slivers were prepared containing 20% polypropylene fibers and 80% rayon fibers. These mixed slivers were run through the draw frame as shown in FIG. 1 and described above. Roll **19** was oscillated as before causing the highly-drafted fiber web emerging from the draw frame to be deposited on the carrier sheet in a uniform sinusoidal pattern of parallelly-aligned fibers. No adhesive was applied to the tissue carrier sheet. The fibers, nevertheless, retain the aligned sinusoidal pattern. It is not known why the fibers remain aligned in the wave pattern shown, but apparently, sufficient electrostatic or frictional attraction exists between the carrier sheet and the drawn web to keep the pattern undisturbed. Upon hot calendering, a self-sustaining laminate was obtained. This product was in turn folded and further laminated to provide a nonwoven web with improved cross-directional strength, and having an appearance similar to that shown in FIG. 4. The bonding strength in this instance coming from the thermoplastic nature of some of the fibers.

While a folding arrangement is shown in FIGS. 2 and 3 as the means employed to obtain the laminated product of FIG. 4, it will readily be seen that a similar product may be obtained by taking two rolls of the product obtained from the first stage of the process, and by running the webs together in face-to-face arrangement between rolls of a heated calender stack for bonding purposes. To be effective with respect to cross-direction strength, however, the sinusoidal patterns of the webs before lamination should be arranged with respect to one another so that the sinusoidal pattern in one web is out of phase from the sinusoidal pattern in the other web, to overlap and intersect the aligned fibers of the other web in the manner shown in FIG. 4.

While various well-known adhesives may be employed in the process, advantages reside in the use of plastisols, which, as is well known, comprise colloidal dispersions of synthetic resins in a suitable organic ester plasticizer, and which, under the influence of heat, provide good binding power while remaining soft and flexible. While many adhesives of this type are known, those found particularly useful for incorporation in the product of this invention include vinyl chloride polymers, and copolymers of vinyl chloride with other vinyl resins, plasticized by organic phthalates, sebacates, adipates, or phosphates. These provide a fast curing plastisol adhesive characterized by relatively low viscosity, low migration tendencies, and minimum volatility. Such adhesives remain soft and flexible after curing, can be reactivated by the application of heat and pressure, such as by hot-calendering for the aforesaid lamination purposes, and insure that the resultant product retains a desirable softness and proper hand and feel.

While plastisols are preferred, polyvinyl resins per se, plasticized or unplasticized may also be used. Other flexible adhesives, which may be employed, although generally less desirable, include materials such as acrylic res-

ins like the alkyl acrylates and butadiene resins such as buna-S and buna-N.

The adhesive pattern shown in the illustrations comprises a spaced brick-like arrangement. Other well-known patterns may be employed, such as spaced continuous parallel lines, spaced circles, dots, V's, herringbones, etc. It is preferred that the pattern be substantially open with large adhesive free areas. If flexibility is desired, it is preferred that the total area occupied by the adhesive comprise not more than 25% of the total area of the original fiber-wadding laminate. No matter what adhesive arrangement is chosen, care should be taken to assure that the adhesive-free area between adjoining adhesive patterns be less in the longitudinal direction of the fibers than the average length of the individual fibers, in order that the integrity of the web is maintained.

The fibers used in the process may comprise most of the staple length fibers employed in textiles. These include both natural and synthetic fibers such as cotton, viscose or acetate rayon, nylon, polyesters, acrylonitriles, polyolefins, and the like. When synthetic fibers are used, a denier range of 0.5 to 3 is preferred. However, coarser denier may be used. It is also preferred that the fibers be of staple length, or in the range of ½ to about 3 inches or longer, with the majority of fibers being at least one inch in length. For most purposes, the drafted web should be as light weight as possible commensurate with handleability on the drawing frame. Suitable webs in the weight range of 3 to 20 grams per square yard have been successfully drafted and bonded at speeds of from 20 feet per minute to well over 500 feet per minute. Webs of a higher weight may also be successfully made by this process.

While in the illustrated process, sheet **17** is oscillated transversely by means of oscillating roll **19**, it will readily be seen that a sinusoidal pattern may also be obtained by oscillating the entire draw frame **15**.

It will be apparent to those skilled in the art that many variations from the examples given may be employed without departing from the spirit of this invention. For example, the weight of the starting slivers may be varied to provide a drawn web of varying thickness throughout its width. Similarly, various mixtures of thermoplastic and nonthermoplastic fibers may be used.

What is claimed is:

1. A method for producing a laminated web from layers of highly-drafted fibers and plies of cellulose wadding; said method comprising the steps of providing multiple slivers of staple length textile fibers; juxtaposing said slivers in side-by-side relation and drawing the individual fibers in said slivers out to substantially their full length while parallelly disposed with other drawn fibers to form a tenuous web of highly-drafted and longitudinally aligned individual fibers; applying a thin layer of adhesive to a lightweight cellulose wadding sheet in a spaced pattern; positioning a continuous length of said adhesive carrying wadding under said aligned fiber tenuous web; moving said tenuous web and said sheet in the same direction at approximately the same speed and depositing said tenuous web on said adhesive printed wadding sheet while providing oppositely reciprocating side-to-side motion between said tenuous web and said wadding sheet at the point where said tenuous web is deposited on said sheet in contact with said adhesive whereby said tenuous web assumes a regular sinusoidal pattern on said sheet; maintaining said fibers and said adhesive in contact, while applying heat thereto, and pressing said fibers firmly in said adhesive to embed said fibers therein in said sinusoidal pattern, and curing said adhesive.

2. The method of claim **1** in which fiber-faced surfaces of the resulting fiber-wadding sheet laminate are placed in face-to-face contact with the sinusoidal pattern of fibers in one of said surfaces out of phase with the sinusoidal pattern of fibers in the opposing surface, and hot calendering said contacting sheets to reactivate said adhesive, causing said adhesive to migrate between fibers and bind said laminates to each other.

3. The method of claim **2** in which the fiber-faced surfaces are placed in face-to-face contact by folding.

4. The method of claim **2** in which the fiber-faced surfaces are placed in contact by aligning separately formed sheets of said laminate.

5. An adhesively bonded nonwoven fabric consisting essentially of at least one layer of highly-drafted individual staple length fibers extended to substantially their full length and arranged in a sinusoidal pattern wherein the individual fibers are substantially parallel to each other, at least one layer of lightweight cellulose wadding, and a layer of flexible adhesive between said fiber layer and said wadding layer to bond said layers together; said adhesive being arranged in a spaced pattern and partially penetrating said wadding; said fiber layer being embedded and held in said adhesive.

6. An ahesively-bonded nonwoven fabric consisting essentially of outer layers of lightweight cellulose wadding, inner layers of highly-drafted individual staple length fibers extended to substantially their full length and arranged in a sinusoidal pattern wherein the individual fibers are substantially parallel to each other, and a layer of flexible adhesive in a predetermined pattern between each of said wadding layers and said fiber layers; said fiber layers being arranged in face-to-face relationship so that the sinusoidal pattern of one layer is out of phase with the sinusoidal pattern of the opposing layer and the fibers in one layer cross the fibers in the adjoining layer; said adhesive partially penetrating said wadding layers with the fibers embedded in said adhesive and with portions of said adhesive between one fiber layer and one wadding layer extending between fibers in one layer to join portions of said adhesive extending between the fibers of the other fiber layer and bonding the layers into a unitary fabric.

7. The fabric of claim **6** in which the adhesive is a plastisol.

8. The fabric of claim **6** in which the fibers are selected from the group consisting of cotton, viscose, acetate, rayon, nylon, polyesters, acrylonitriles, and polyolefins.

9. The fabric of claim **8** in which the fibers are in the denier range of 0.5 to 3.

10. The fabric of claim **8** in which the fibers have a length in the range of about ½ to about 3 inches.

11. The fabric of claim **10** in which the space between adjoining portions of adhesive in the spaced pattern is less than the average length of the individual fibers.

12. A method for producing a laminated web from layers of highly-drafted fibers and plies of cellulose wadding; said method comprising the steps of providing multiple slivers of staple length textile fibers containing a portion of thermoplastic fibers therein; juxtaposing said slivers in side-by-side relation and drawing the individual fibers in said slivers out to substantially their full length while parallelly disposed with other drawn fibers to form a tenuous web of highly-drafted and longitudinally aligned individual fibers; positioning a continuous sheet of lightweight cellulose wadding sheet under said aligned fiber tenuous web; moving said sheet and said tenuous web in the same direction at approximately the same speed and depositing said tenuous web on said sheet while providing oppositely reciprocating side-to-side motion between said tenuous web and said sheet at the point where said tenuous web is deposited on said sheet whereby said tenuous web assumes a regular sinusoidal pattern of aligned fibers in contact with said sheet; and while maintaining said tenuous web and said sheet in contact applying heat and pressure to said sheet to activate said thermoplastic fibers and bond said tenuous web and said sheet into a unitary fabric.

13. The method of claim **12** in which fiber-faced surfaces of the resulting unitary fiber-wadding fabric are placed in face-to-face contact with the sinusoidal pattern

of fibers in one of said surfaces out of phase with the sinusoidal pattern of fibers in the opposing surface, and hot calendering said contacting fabrics to reactivate said thermoplastic fibers and bind said fabrics together.

14. A nonwoven fabric consisting essentially of at least one layer of highly-drafted individual staple length fibers extended to substantially their full length and arranged in a sinusoidal pattern wherein the individual fibers are substantially parallel to each other and at least one layer of lightweight cellulose wadding; a portion of said fibers being thermoplastic; said thermoplastic fibers binding said fiber layer and said wadding layer together.

15. The fabric of claim **14** in which two of said fiber layers are in face-to-face contact with the sinusoidal pattern in one layer out of phase with the sinusoidal pattern of the other layer, the fibers in one layer intersecting and overlying the fibers in the other layer.

References Cited

UNITED STATES PATENTS

197,502	11/1877	Turner et al.	156—176X
2,958,608	11/1960	Barnard	161—170X
3,110,609	11/1963	Bletzinger	161—59X
3,314,841	4/1967	Romanin	156—179
2,407,548	9/1946	Goldman	161—57X
3,139,365	6/1964	Andrews	156—289X
3,327,708	6/1967	Sokolowski	161—143X

WILLIAM J. VAN BALEN, Primary Examiner

W. W. SCHWARZE, Assistant Examiner

U.S. Cl. X.R.

156—73, 290, 306; 161—141, 148, 150, 156