United States Patent

[11] 3,551,616

[72] Inventors **Hans Y. Juliusburger**
Putnam Valley;
Morris Krakinowski, Ossining; George R. Stilwell, Jr., West Nyack, N.Y.

[21] Appl. No. **791,406**
[22] Filed **Jan. 15, 1969**
[45] Patented **Dec. 29, 1970**

[73] Assignee **International Business Machines Corporation**
Armonk, N.Y.
a corporation of New York

[54] **MULTIPLE SWITCH ENCODING DEVICE**
4 Claims, 8 Drawing Figs.

[52] **U.S. Cl.** **200/46,** 317/101, 339/18
[51] **Int. Cl.** **H01h 43/08**
[50] **Field of Search** ..... 339/18; 317/101CX; 200/6A, 16.1, 83.8, 86, 46, 168G, 175—180

[56] **References Cited**
UNITED STATES PATENTS
3,120,584 2/1964 Grunfelder et al. 200/166.1X

Primary Examiner—Robert K. Schaefer
Assistant Examiner—H. J. Hohauser
Attorneys—Hanifin and Clark and John J. Goodwin

ABSTRACT: An encoding device is provided in which a first plurality of parallel conductive lines are located proximate to a second plurality of lines extending normal to the first plurality. The intersection points of the lines are selectively connected by switches to connect pairs of the lines to form current paths. The lines are also permanently connected together by contacts to reduce the number of output lines required for a given number of switches. The first set of lines is located on the upper surface of a substrate and the second set of lines is located on the lower surface of a diaphragm separated from the substrate by an insulating layer having holes at the intersection points of the lines. The lines are connected by pressing the diaphragm through the holes.

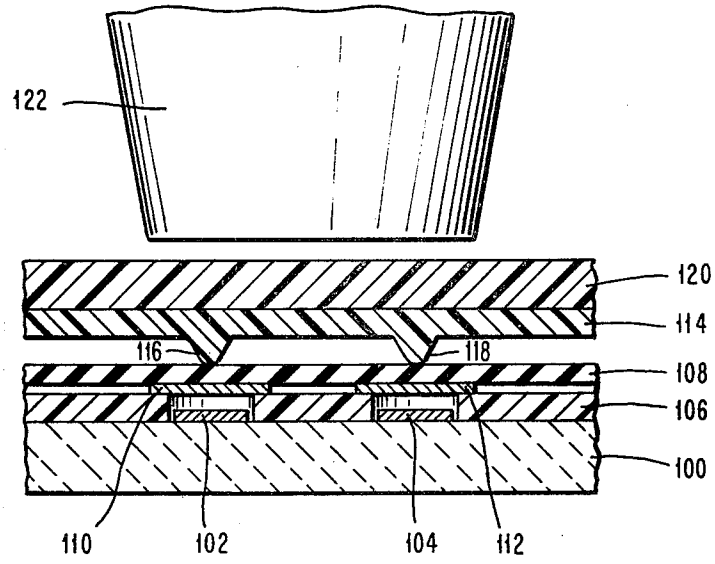

FIG. 1

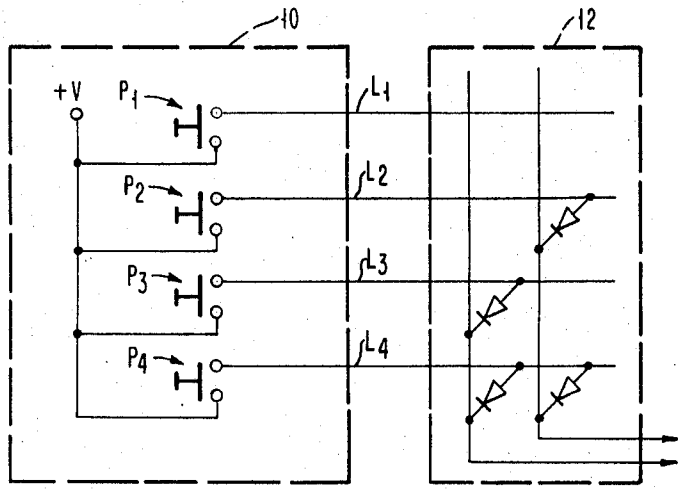

FIG. 2

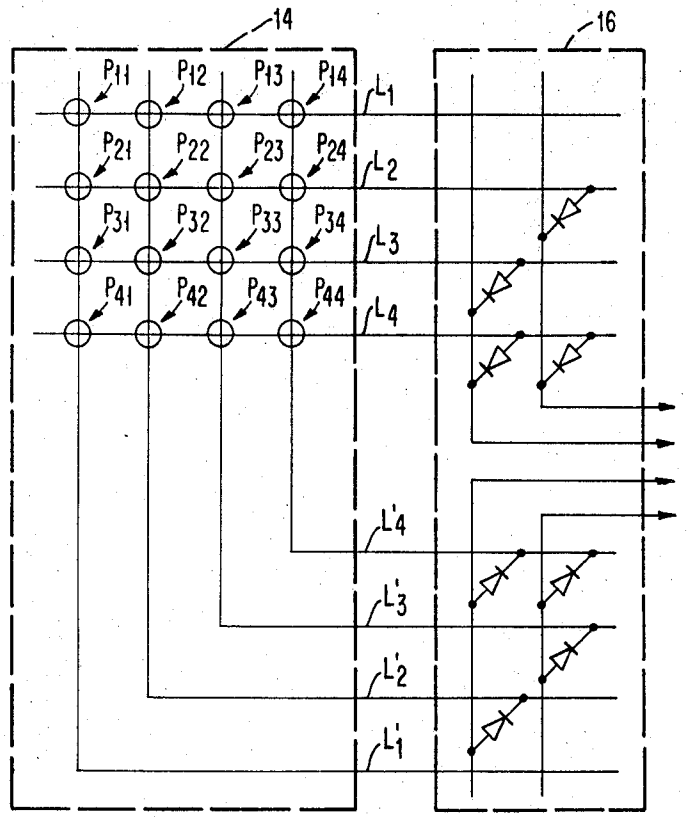

INVENTORS
HANS Y. JULIUSBURGER
MORRIS KRAKINOWSKI
GEORGE R. STILWELL, JR.

BY John J. Goodwin

ATTORNEY

FIG. 3

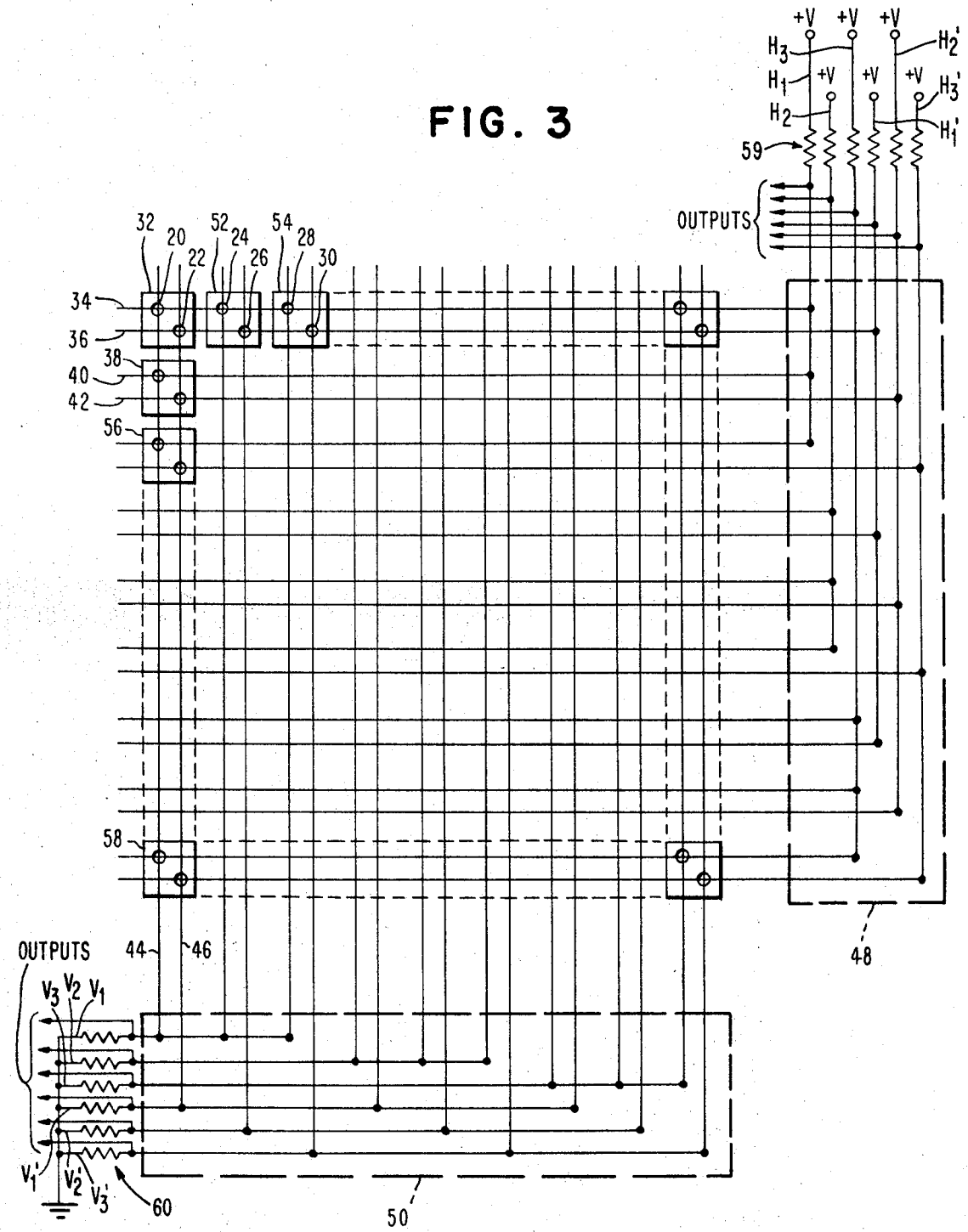
+V
+V
+V
H3
H2'
H1
+V
+V
+V
H3'
H2
H1'
59
OUTPUTS
32
20
22
52
24
26
54
28
30
34
36
38
40
42
56
58
48
OUTPUTS
44
46
V3
V2
V1
V1'
V2'
V3'
60
50

FIG. 4

FIG. 4A	FIG. 4B

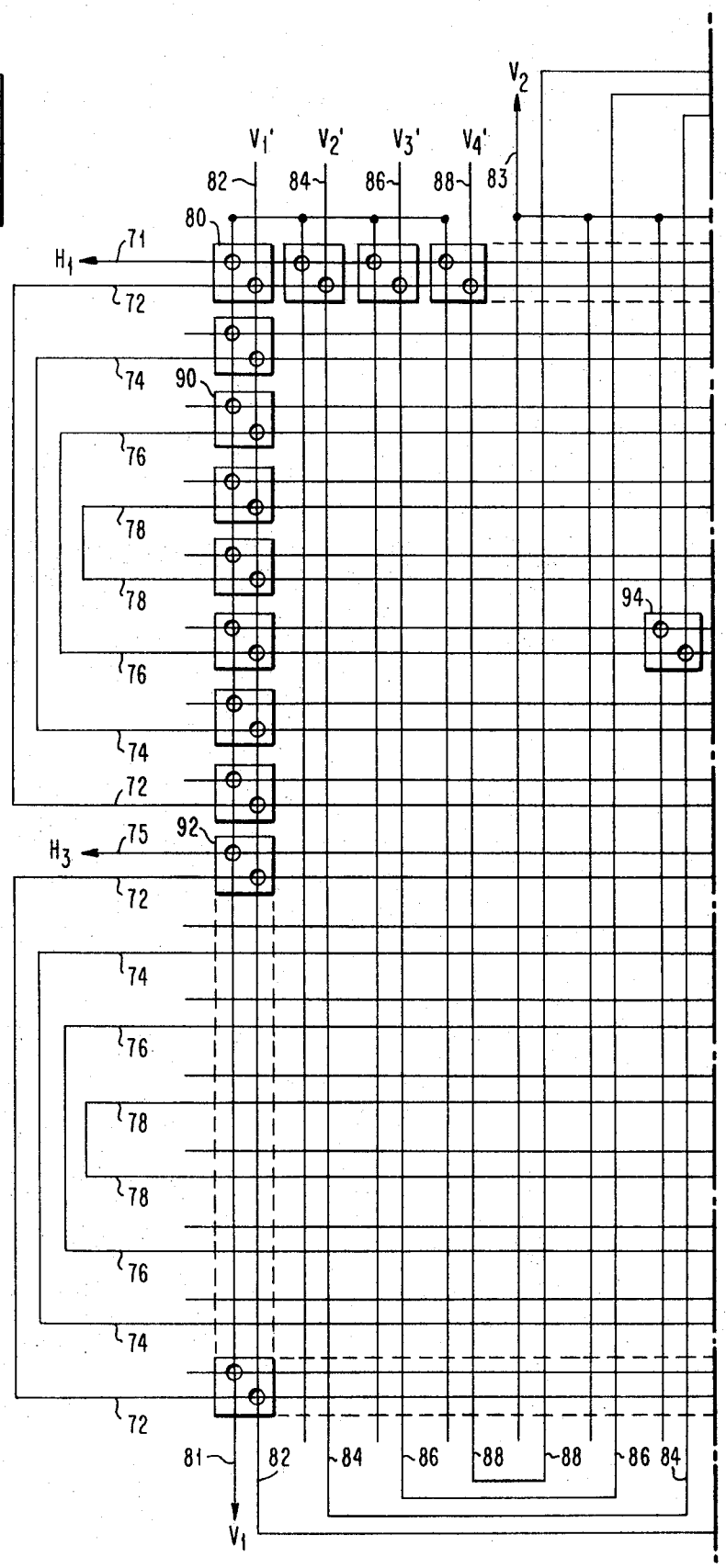

FIG. 4A

FIG. 4B

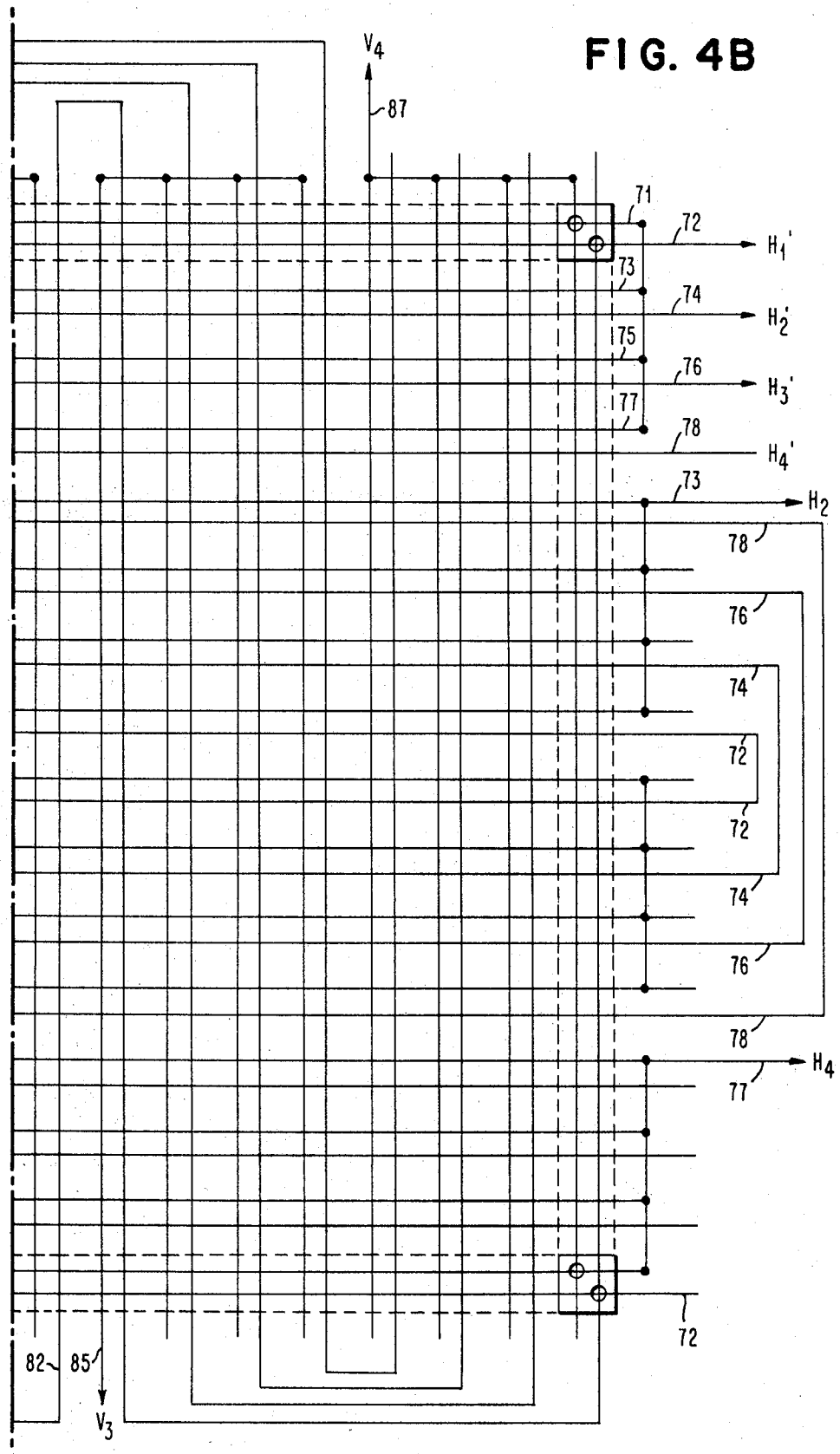
V4
87
71
72
H1'
73
74
H2'
75
76
H3'
77
78
H4'
73
H2
78
76
74
72
72
74
76
78
H4
77
72
82
85
V3

FIG. 5

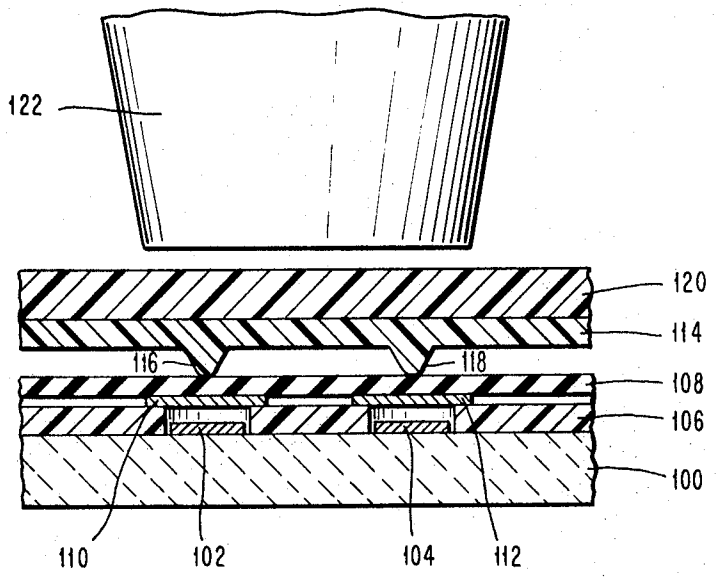
122
120
114
116
118
108
106
100
110
102
104
112

FIG. 6

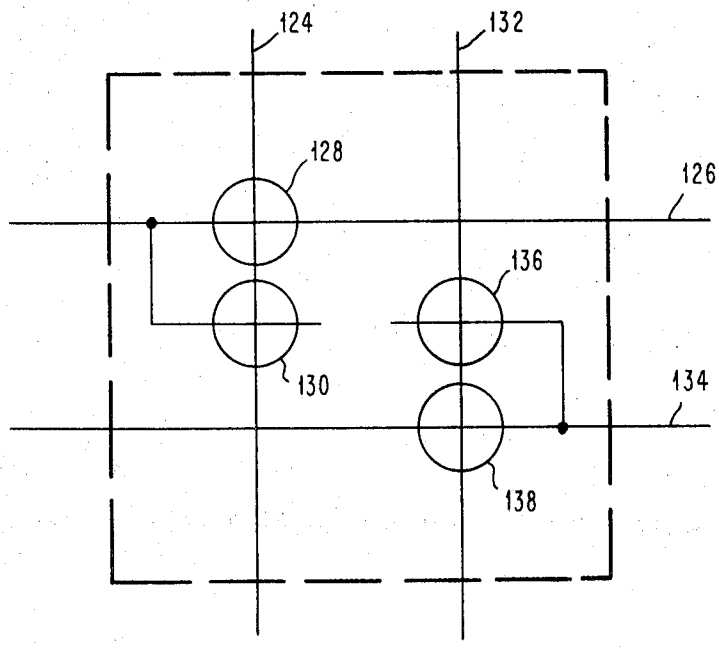
124
132
128
126
136
130
134
138

MULTIPLE SWITCH ENCODING DEVICE

BACKGROUND OF THE INVENTION

1. Field of the Invention

The present invention is in the field of multiple switch or binary encoding devices which selectively interconnect multiple electrical conductors.

2. Description of the Prior Art

U.S. Pat. No. 3,308,253 issued Mar. 7, 1967, to M. Krakinowski, entitled "Diaphragm Switch Having A Diaphragm Supported On An Incompressible Layer and An Elastomar Overlaying the Diaphragm," describes an encoding device similar to the present invention. The prior art device is distinct in that it has only two outputs for each switch and does not employ contact encoding.

SUMMARY OF THE INVENTION

In conventional multiple switch encoding devices, pairs of electrical conductors are brought into contact by the switches. If there are N switches, the device will have 2N½ output lines. It is an object of the present invention to provide a novel multiple switch which has fewer than 2N½ output lines. In the device of the present invention, the switch encoding portion is connected into tensors of lower rank by a scheme referred to as contact encoding.

The foregoing and other objects, features and advantages of the invention will be apparent from the following more particular description of the preferred embodiments of the invention, as illustrated in the accompanying drawings.

BRIEF DESCRIPTION OF THE DRAWINGS

In the drawings:

FIG. 1 is a schematic diagram of a conventional pushbutton switch arrangement which is used to explain the present invention;

FIG. 2 is a schematic diagram of a conventional multiple switch encoding device which is used to explain the present invention;

FIG. 3 is a schematic diagram of one embodiment of the present invention employing switch encoding and contact encoding;

FIGS. 4A and 4B, when combined as shown in FIG. 4, show a schematic diagram of another embodiment of the present invention employing switch encoding, contact encoding and self-encoding;

FIG. 5 is a partial view of a section of a particular encoding device which can be employed in the present invention; and

FIG. 6 is a schematic diagram of a switching arrangement which may be employed in the present invention.

DESCRIPTION OF THE PREFERRED EMBODIMENTS

In many electronic devices and systems, a large number of signals are controlled and operated by reducing each signal to a code, for example, the binary code in which different combinations of electrical circuits are selectively and separately actuated. A switching device for encoding such signals is required and a matrix switch has often been employed.

A matrix switch is a useful encoding device which includes a first group of electrical conductors or lines usually arranged in parallel and a second group of parallel electrical conductors or lines arranged normal to the first group to form a grid having a number of possible intersection points. Each intersection point includes a switch element connected between a first conductor and a second conductor so that pairs of conductors can selectively be brought into electrical contact. Each switch element brings a unique pair of conductors into contact so that the signal produced by bringing a pair into contact is a coded indication of the particular closed switch.

If the first group contains I conductors and the second group contains J conductors, I × J intersection points are formed so that the number of switch elements P is equal to I × J. If each group contains the same number of conductors (I = J), then P is equal to I^2. The matrix switch is used in combination with electronic devices which utilize the code. It can be seen that if a matrix switch having a large number of switch elements is required, a large number of external conductors will be required and therefore the number of necessary electronic devices will also be large.

For example, if 64 switch elements are required, 16 conductors are necessary, eight in each group for a square matrix (8×8=64). The general expression for the relationship between the number of conductors I for a given number of switch elements P is

$$I=2P^{1/2} \quad (1)$$

The value "2" in the expression is determined by the fact that each switching element connects two conductors thereby providing two outputs for each switching element. One of the important features of the present invention is the reduction of the number of external conductors representing the P switching elements by increasing the number of outputs per switching element. Thus, if expression (1) can be generalized as

$$I=nP^{1/n}$$

where n is the number of outputs per switch, then the number of external conductors for given values of P can be reduced.

For example, presume that a large value of P such as 4,096 is required. For 4,096 switching elements in a conventional matrix switch, expression (1) is

$$I=2\times 4{,}096^{1/2}=2\times 64=128$$

However, if n can be 4, then

$$I=4\times 4{,}096^{1/4}=4\times 8=32$$

Thus, 96 less external conductors are connected to the logic devices for the same value of P as a consequence of increasing n. Increasing the value of n becomes a topological problem as well as an electrical problem, particularly when the conductors occupy only two planes. An explanation of the theory of the present invention follows wherein the elements of the invention are described in terms of vectors and tensors.

When there are P switches each connected to one of P input lines, the resulting information produced by switch closure can be compressed at the most into $\log_2 P$ output lines. This is defined as encoding. This encoding procedure can be arbitrarily broken down into two partial encoding steps, the first performed by switches, and the second by means of electronic devices, such as diodes and/or transistors. An illustration of a simple two stage encoding device is shown in FIG. 1. The first stage 10 consists of pushbutton switches P_1, P_2, P_3 and P_4, each respectively connected to output lines L_1, L_2, L_3 and L_4. The output lines are connected by diodes in second stage 12 so that two-bit binary code words 00, 01, 10 and 11 are produced when switches P_1 through P_4 are respectively closed.

Assuming that the switches P_1 through P_4 are activated one at a time only, any input can be considered as a vector of rank 1 and be designated P_i $(i=1, 2 \ldots I)$

The magnitude of any particular vector is given by the specific value of i. The total set of vectors represented by the switches may be called a vector field. The magnitude of the vector field in the above example is represented by I. In FIG. 1, I = 4, which is the same as the magnitude of the largest vector.

In the example illustrated in FIG. 1, the output of the first stage 10 (i.e., the input to the second stage 12) is a vectors L_i $(i=1, 2\ldots)$ where I = 4.

In further developing the vector concept, it should be noted that advantage can be taken of the fact that a switch P has two contacts which both can be used as information bearing output lines. FIG. 2 illustrates a matrix switch having sixteen switch elements in first stage 14. The lines L_1, L_2, L_3 and L_4 of FIG. 2 and L'_1, L'_2, L'_3 and L'_4 are in different planes and are normally not connected at the 16 intersection points but contact can selectively be made by various methods. An illustration of a matrix switch of this type wherein contact is made by a stylus which presses the two lines together is described in the aforesaid U.S. Pat. No. 3,308,253, issued Mar. 7, 1967, to M. Krakinowski.

The switch described in the patent includes a group of parallel conductors printed on the upper surface of a substrate. A spacer layer is placed over the upper surface of the substrate and contains holes at the intended intersection

points. A diaphragm of elastic material having a group of parallel conductors printed on its bottom surface is placed on the spacer such that the two groups of conductors are normal to each other and are separated by the spacer layer. A switch contact is formed by pressing at a point above a spacer hole to press the diaphragm down into the spacer hole to bring a pair of conductors into contact. A switch of this type has been termed an Elastic Diaphragm Switch and will hereinafter be referred to as an EDS.

In FIG. 2, instead of labeling the switches P_1 through P_{16}, it is more desirable to adopt a two-dimensional labeling scheme wherein each switch is designated by

$$P_{ij} \begin{matrix}(i=1,2 \ldots I)\\(j=1,2 \ldots J)\end{matrix} \quad (I=J=4).$$

These quantities may be defined as vectors of rank 2.

The outputs of the first stage **14**, (i.e., lines L_1—L_4, L'_1—L'_4) are defined as vectors of rank 1 referred to as L_i and L_j respectively and provide a partially encoded code using a total of eight lines to the electronic stage **16**. These output vectors are related to the switch elements by the cartesian product $P_{ij} = L_i \times L_j$. The physical significance of the cartesian product is that activation of a particular switch P_{ij} causes electrical connections to be established between the switch P_{ij} and the outputs L_i and L_j. For example, if switch P_{23} is closed, current can flow from L_2 via the switch to L'_3.

As previously stated, it is very desirable to perform as much encoding as possible in the first or switching stage to reduce the number of output lines in order to minimize the number of components in the second stage containing the relatively more costly electronic components. The number of electronic components is related to the number L of input lines (output lines from the first switching stage). Thus, the object is to reduce the number L and, as previously stated, this is accomplished by making the number *n* as large as practically possible. When *n* is greater than two, the resultant switching vector becomes more complex than P_{ij} and requires more than two-dimensional space for appropriate representation and presents a serious problem when the conductor patterns are confined to printed wire arrangements on two two-dimensional layers.

Also, on each of the two-dimensional surfaces such as in the EDS, only one dimension is available for differentiating between the signals. For example, the lower substrate may have horizontal conducting lines and thus only the vertical dimension conveys the signal information. The upper diaphragm then will have vertical conductors and the information is conveyed horizontally. In view of these dimensional-topological limitations, the tensor concept to be described becomes useful.

The use of the tensor concept adapts itself conveniently to the description of planar switching patterns in that through the utilization of subscripts and superscripts horizontal and vertical components of the encoding device are kept notationally separated.

Since the output lines of the EDS can be considered as horizontal and vertical, the output lines L_i and L_j will now be designated L^r for vertical lines and L_h for horizontal lines. Each switch is defined by the cartesian product $L_h \times L^r$ and is designated by the notation $P^r{}_h$.

In the case where *n* is 4, each switch has four outputs and the switching vector is written $P^{v_1v_2}_{h_1h_2}$.

Unlike the usual case where *n* is 2, the number of switches is not the cartesian product of two output tensors L_i and L_j. For an $n>2$, the switches are the product of intermediate horizontal and vertical tensors designated K.

Thus, $P^{v_1v_2}_{h_1h_2} = K_{h_1h_2} \times K^{v_2v_1} \times$ where $P^{v_1v_2}_{h_1h_2}$ is a mixed tensor of rank 4 and $K_{h_1h_2}$ and $K^{v_1v_2}$ are rank 2 tensors represented by a pair of conductors.

The K tensors must be further encoded into the L vectors by a scheme referred to as contact encoding since the tensors are encoded by direct contacts between lines rather than by switches.

The multilevel encoding scheme using two planar surface line arrays can now be formally described as follows: Given an original input represented as a tensor field of the form $P^{v_1v_2 \ldots v_j}_{h_1h_2 \ldots h_i}$, a first encoding level uses switch encoding to partition the original tensor field into two intermediate tensor fields $K_{h_1h_2 \ldots h_i}$ and $K^{v_1v_2 \ldots v_j}$ such that the cartesian product of the intermediate tensors equal the original tensor field

$$P^{v_1v_2 \ldots v_j}_{h_1h_2 \ldots h_i} = K_{h_1h_2 \ldots h_i} \times K^{v_1v_2 \ldots v_j}$$

Subsequent levels of contact encoding on the same planar surfaces perform further partitioning until the final set of tensors (or vectors) $L_{h_1}, L_{h_2} \ldots L_{h_i}$ and $L^{v_1}, L^{v_2} \ldots L^{v_j}$ is obtained.

The ultimate relationship is

$$P^{v_1v_2 \ldots v_j}_{h_1h_2 \ldots h_i} = L_{h_1} \times L_{h_2} \times \ldots \times L_{h_i} \times L^{v_1} \times L^{v_2} \times \ldots \times L^{v_j}$$

and the total number of output lines is

$$L = L_{h_1} + L_{h_2} + \ldots + L_{h_i} + L^{v_1} + L^{v_2} + \ldots + L^{v_j}$$

Referring to FIG. 3, a switch encoding arrangement is shown wherein the number of switches P = 81 and *n* is equal to 4. A conventional matrix switch having 81 switch elements with *n* equal to 2 would require nine horizontal lines and nine vertical lines, giving a total of 18 output lines. In the encoding arrangement of FIG. 3, each switch element has four outputs and the total number of output lines is $4 \times 81\frac{1}{4} = 12$. However, to carry out the encoding, the device of FIG. 3 requires a switch encoding stage and a contact encoding stage.

In FIG. 3, the encoding switch arrangement is shown in schematic form. In actual construction, one set of lines, for example, the horizontal, are printed on the top surface of a substrate. There are 18 horizontal lines divided into nine pairs of two lines each. A spacer consisting of insulated material having holes at predetermined points, such as holes **20**, **22**, **24**, **26**, **28**, **30**, etc., is placed over the substrate. A diaphragm of deformable material is placed over the spacer. The diaphragm has 18 vertical lines printed on its bottom surface such that an array of horizontal and vertical lines is produced as schematically shown in FIG. 3.

The horizontal and vertical lines are insulated from each other by the spacer, however, the intersections of the horizontal and vertical lines occur at the hole positions of the spacer. Each switch element actuation consists of pressing the diaphragm locally above pairs of holes to bring two horizontal and two vertical lines into contact as the diaphragm is deformed into the two holes. Thus, switch **32** (depicted by the square area in FIG. 3) connects line **34** to line **44** via hole **20** and line **36** to line **46** via hole **22**. Likewise, switch **38**, when depressed, connects line **40** to line **44** and line **42** to line **46**. All 81 switch elements in FIG. 3, when actuated, connect two horizontal lines to two vertical lines and provide the tensors $P^{v_1v_2}_{h_1h_2}$ of rank 4.

The intermediate tensors $K_{h_1h_2}$ and $K^{v_1v_2}$ are further encoded through contact encoding. Contact encoding is the permanent connection of horizontal and vertical lines, preferably at the edge of the EDS. Tensor $K_{h_1h_2}$ is shown in FIG. 3 in block **48** and tensor $K^{v_1v_2}$ is shown in block **50**. The intermediate tensors are of rank 2 and each has a magnitude of 3. The contact encoding is arranged so that each switch closure (one of 81 code) which connects four lines (four of 36 code) is further encoded into a four of 12 code. The 12 output lines are labeled H_1, **2**, **1**, H_3, H'_1, H'_2, H'_3 and V_1, V_2, V_3, V'_1, V'_2, V'_3. Each switch closure produces a unique connection of H, V, H' or V' lines. For example, switch **32** connects H_1 to V_1 and H'_1 to V'_1, switch **52** connects H_1 to V_1 and H'_1 to V'_2. Switch **56** connects H_1 to V_1 and H'_3 to V'_1. Switch **58** connects H_3 to V_1 and H'_3 to V'_1. Thus, for each closure of one of the 81 switches, current flows in a unique combination of four output lines. In a conventional matrix switch, a total of 18 output lines would be required whereas in the present invention, only 12 lines are needed. The saving in output lines increases with the number of switch elements used.

The contacts for the contact encoding can be constructed in a number of ways, for example, by plated through holes or by a clamping device which permanently presses the diaphragm through holes at the contact points.

The essential feature of the encoding device is that unique pairs of lines are brought into contact. One manifestation of such contact is to have current flow in the connected lines. Thus, H_1, H_2, H_3, H'_1, H'_2 and H'_3 may be connected through resistors **59** to potential sources +V and V_1, V_2, V_3, V'_1, V'_2 and V'_3 may be connected through resistors **60** to ground. No current will flow in the lines until a switch is closed to create a current path from +V to ground which produces voltage drops in the output lines. The lines H_1, H_2, H_3, H'_1, H'_2, H'_3, V_1, V_2, V_3, V'_1, V'_2 and V'_3 are then connected to electronic utilization devices, such as transistors, diodes, etc.

The foregoing discussion illustrated how an encoding device can be formed in two planes using a combination of switch encoding and contact encoding, such that less output lines are required than conventional encoding devices. The encoding device was restricted to horizontal lines in one plane and vertical lines in the other plane. An alternate approach can be used to reduce the number of contacts used in the contact encoding, however, horizontal and vertical lines are located in both planes. The alternate approach is referred to as self-encoding.

Referring to FIGS. 4A and 4B, an encoding device is shown having 256 switching elements ($P = 256$, $n = 4$, $L = 16$).There are 32 horizontal lines and 32 vertical lines arranged in groups of two, such that each switching element has two intersection points and four outputs. As in FIG. **3**, there are two intermediate K tensors, however, one is formed by contact encoding while the other is formed by self-encoding produced by having certain horizontal lines "wrap around" via vertical line connections and certain vertical lines "wrap around" by horizontal line connections. Thus, the second horizontal line **72** extends vertically and becomes the 16th horizontal line, again extends vertically and becomes the 18th horizontal line, and extends vertically once again to become the 32nd horizontal line. The fourth, sixth and eighth horizontal lines **74, 76** and **78** also "wrap around" and extend through the switches a total of four times. **18**

The horizontal lines which are not self-encoded (the odd lines in the example of FIGS. 4A and 4B) are connected together in groups of four by contact encoding. Thus, the first, third, fifth and seventh lines **71, 73, 75** and **77** are connected together by contacts as are the other three groups of four odd lines each. The vertical lines in the other plane are arranged identical to the horizontal lines but oriented by 90 90. The H_1, H_2, H_3 and H_4 output lines are derived directly from the first, ninth, 17th and 25th lines labeled respectively **71, 73, 75** and **77**. The H'_1, H'_2, H'_3 and H'_4 lines are derived directly from the ends of the wrap around lines **72, 74, 76** and **78** respectively. The same is true in the vertical plane, V_1, V_2, V_3 and V_4 labeled **81, 83, 85** and **87** and V'_1, V'_2, V'_3 and V'_4 labeled **82, 84, 86** and **88**.

Each switch closure will connect a unique two pairs of two leads each to produce a four-bit output code (the electrical portion of the encoding device shown in FIG. **3** has been omitted from FIGS. 4A and 4B for clarity). Thus, closing switch **80** connects H_1 to V_1 and H'_1 to V'_1 permitting current to flow in these four lines. Closing switch **90** connects H_1 (via a contact and line **71**) to V_1 and H'_3 to V'_1. Closing switch **92** connects H_3 to V_1 and H_1 (via lead **72**) to V'_1. Switch **94** connects H_2 (via a contact) to V_2 (via a contact) and H'_3 (via lead **76**) to V'_2.

In like manner, each of the 256 switch elements connect a unique group of four lines to establish current flow. There are a total of 16 output lines. In a conventional matrix encoder, 256 switches require 32 output lines. Since each of the output lines are normally connected to a transistor or similar electronic element which is relatively more costly than the encoding switch, it is more desirable, for example, to have a four out of 16 code rather than a two out of 32 code for the same number of switching elements.

FIGS. **3** and 4A and 4B illustrates encoding devices wherein $n = 4$ and each switch element has four outputs. This is accomplished by two switch points actuated at the same time. For values of n greater than four, more lines and more switch points are included in each switch element.

It was previously stated that when the encoding device of the present invention is embodied in an EDS, the switches are actuated by means of a stylus which depresses the diaphragm through holes in a separator to make contact with the substrate. FIG. **5** shows a specific arrangement for closing the switches in an EDS. FIG. **5** is a representation of a sectional view taken through two holes of the separator layer. FIG. **5** is drawn for purposes of explanation and therefore the relative scales of the element are not uniform. In FIG. **5**, the substrate **100** contains the first two lines **102** and **104**. The separator layer **106** is mounted over substrate **100**. The diaphragm **108** contains the other two conductors **110** and **112**. An elastometric actuator sheet **114** containing conically-shaped bumps **116** and **118** is placed over the diaphragm **108**, A relatively thick layer of soft elastometric material **120** is placed over the actuator sheet. Force is applied, for example, by finger or by stylus **122**, and transmitted to the actuator bumps **116** and **118** which cause lines **110** and **112** to contact lines **102** and **104** respectively.

The structure of FIG. **5** is particularly useful if more than one contact is used for each line connection. If desired, in order to insure switch closure, more than one contact point may be used to each line connection. Thus, in FIG. **6**, lines **124** and **126** are brought into contact through holes **128** and **130**. Likewise, lines **132** and **134** are brought into contact through holes **136** and **138**. In such case, the actuator sheet **114** will contain four bumps. The thick elastomer **120** serves to spread the force applied by the stylus. The localized load will be supported by at least three or all four of the bumps. Any combination of the at least three bumps will bring the necessary two lines into contact.

What has been described is a unique encoding device including a plurality of switches wherein the number of output lines from the device for a selected number of switches is minimized. The encoding device has been embodied as a keyboard employing elastic diaphragm switch technology. The invention is not limited to this technology however. For example, an optical encoding device using the principles of the present invention may be formed wherein the horizontal and vertical lines are connected at their intersection by photoconductors which, when dark, provide an open circuit condition. The switch closures can then be made by directing a light beam at selected photoconductors which, when illuminated, provide current paths between the lines. In the optical version, the same theory of switch encoding and contact encoding to reduce the number of output lines is employed.

While the invention has been particularly shown and described with reference to preferred embodiments thereof, it will be understood by those skilled in the art that various changes in form and details may be made therein without departing from the spirit and scope of the invention.

We claim:

1. An encoding device for selectively connecting electrical conductors comprising:

a first support member located in a first plane;

a first plurality of conductive lines disposed on one surface of said first support member;

a second support member located in a second plane proximate to said first plane;

a second plurality of conductive lines disposed on one surface of said second support member opposing said first plurality of conductive lines on said first support member;

a plurality of P switching elements for selectively connecting conductors of said first plurality to conductors of said second plurality, each one of said P switching elements adapted to connect a total of n conductors where n is an integer greater than 2;

a third plurality of electrical conductors for permanently

connecting together selected ones of said first plurality of electrical conductors; and

a fourth plurality of electrical conductors for permanently connecting together selected ones of said second plurality of electrical conductors, said third and fourth plurality of conductors constituting a total of L output lines wherein L is equal to $n \times P^{1/n}$.

2. An encoding device for selectively connecting electrical conductors comprising:

a rigid substrate having upper and lower planar surfaces;

a first plurality of conductive lines disposed in parallel on the upper surface of said substrate;

a layer of insulating material mounted on said upper surface of said substrate and containing a plurality of holes arranged in rows and columns each column of holes being located above and colinear with a separate one of said first plurality of conductive lines to provide access to said lines through said holes;

a layer of flexible material having upper and lower planar surfaces mounted on top of said insulating layer and having a second plurality of conductive lines disposed on said lower surface in a direction normal to the direction of said first plurality of lines each of said second plurality of lines being located above a separate row of said plurality of holes;

a plurality of depressible switch members located above the upper surface of said flexible member, each switch member adapted to be depressed to press said flexible material through at least two adjacent holes in said insulating material to bring at least two of said second plurality of lines into contact with at least two of said first plurality of lines;

a third plurality of conductive lines, each one permanently connecting together separate groups of at least two of said first plurality of conductive lines to form output lines; and

a fourth plurality of conductive lines, each one permanently connecting together separate groups of at least two of said second plurality of conductive lines to form output lines.

3. An encoding device for selectively connecting electrical conductors comprising:

a first plurality of electrical conductors located in a first plane;

a second plurality of electrical conductors located in a second plane proximate to said first plane;

a plurality of switching means for selectively connecting conductors of said first plurality to conductors of said second plurality;

a third plurality of electrical conductors for permanently connecting together separate groups of at least two of said first plurality of electrical conductors in said first plane to form output conductors; and

a fourth plurality of electrical conductors for permanently connecting together selected ones of separate groups of at least two of said second plurality of electrical conductors in said second plane to form output conductors.

4. An encoding device according to claim 3 wherein each one of said plurality of switching means is adapted to connect at least two pair of said electrical conductors each pair consisting of one conductor from said first plurality of electrical conductors and one conductor from said second plurality of electrical conductors.