Aug. 6, 1968 H. Y. FISHER 3,396,354

SOLENOID WITH PLUNGER

Filed Sept. 1, 1966 2 Sheets-Sheet 1

Fig. 1.

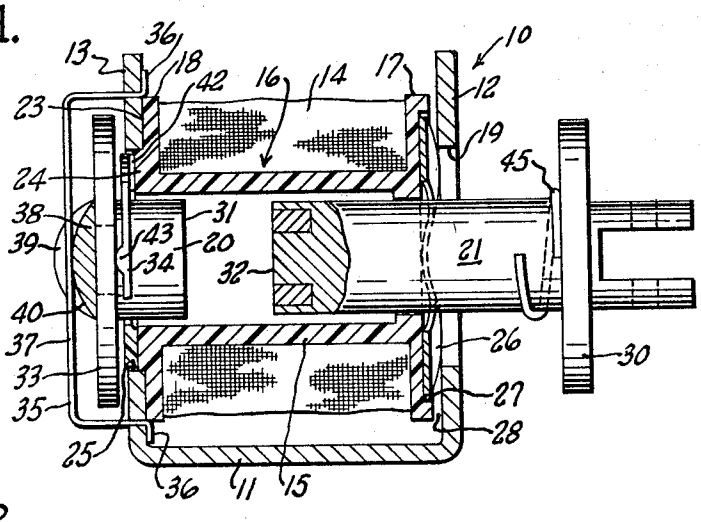

Fig. 2.

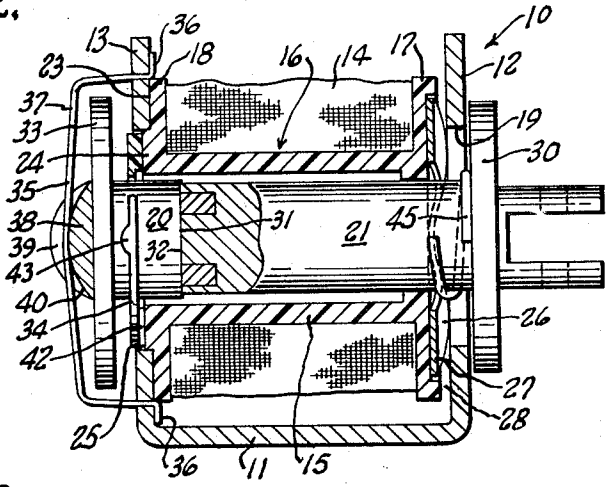

Fig. 3.

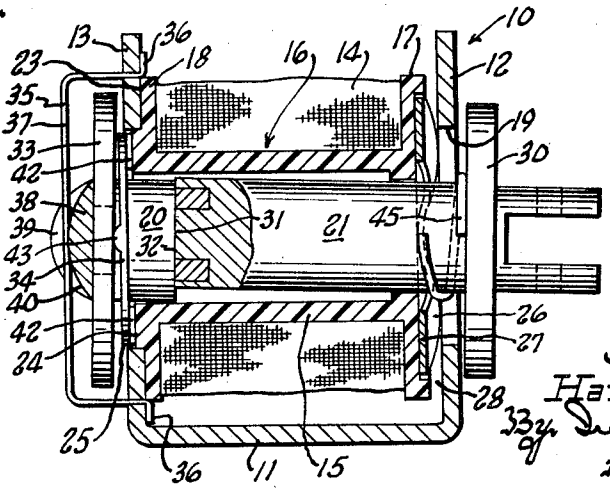

Fig. 4a.

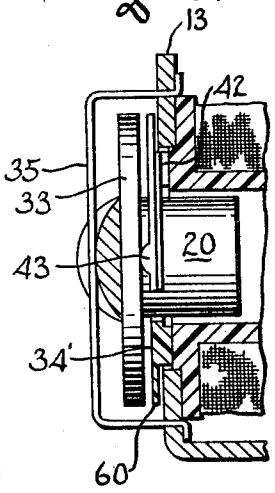

Inventor
Hardin Y. Fisher
By Dearmon Jones
Attorneys

SOLENOID WITH PLUNGER

Filed Sept. 1, 1966 2 Sheets-Sheet 2

Fig. 4.

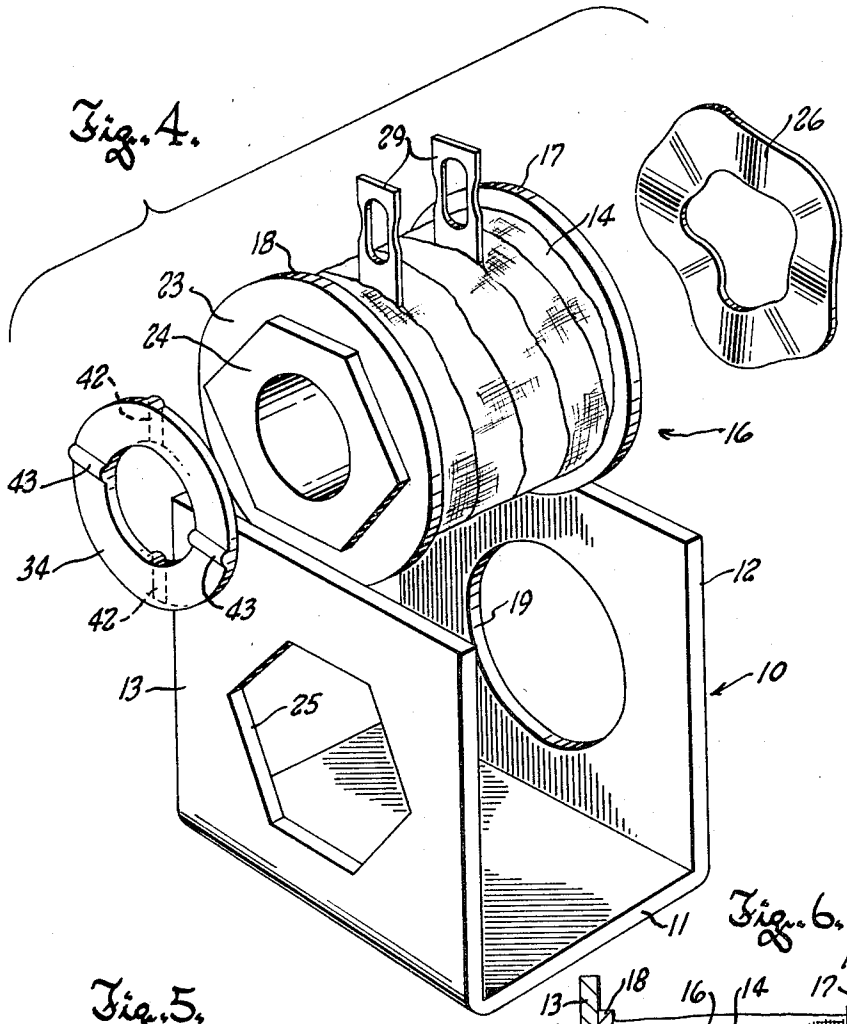

Fig. 5.

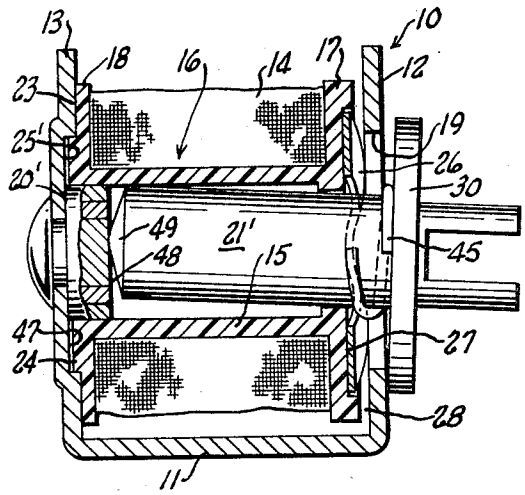

Fig. 6.

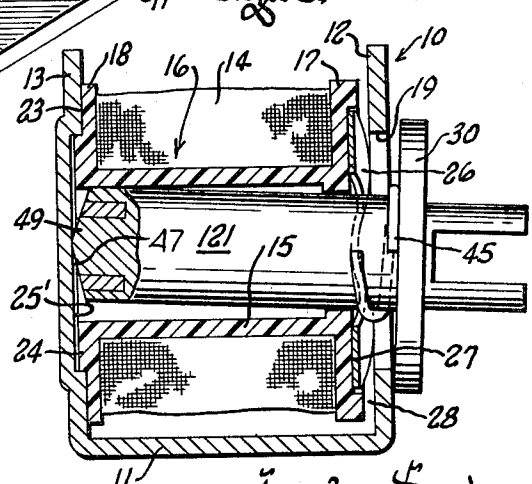

Inventor
Hardin Y. Fisher
By [illegible]
Attorney

United States Patent Office 3,396,354 Patented Aug. 6, 1968

3,396,354

SOLENOID WITH PLUNGER

Hardin Y. Fisher, Hillside, Ill., assignor to Deltrol Corp., Bellwood, Ill., a corporation of Delaware

Filed Sept. 1, 1966, Ser. No. 576,620
12 Claims. (Cl. 335—248)

This invention relates to solenoids, and refers more particularly to improvements in solenoids intended primarily, though not exclusively, for alternating current service.

A typical solenoid of the type to which this invention pertains comprises a stamped generally U-shaped frame of magnetically permeable material having a straight bight and parallel legs projecting from the opposite ends of the bight and embracing flanges on the opposite ends of a tubular plunger guiding and coil supporting bobbin upon which the coil is wound. A solid cylindrical plunger or armature is axially slidably guided in the tubular portion of the bobbin and its forward end projects therefrom through a hole in the adjacent front leg of the frame to enable attachment of the plunger to mechanism to be actuated by the solenoid.

In its attraction stroke, the plunger moves rearwardly into the tubular portion of the bobbin in response to energization of the coil, and the attracted position of the plunger is usually defined by the engagement of its rear or inner end with a plug-like plunger stop fixed in a hole in the rear leg of the frame.

Solenoids of this type are frequently quite noisy in operation. They are particularly subject to loud humming and/or buzzing noises in the attracted position of their plungers, and in addition, the engagement of the plungers with their stops produces hammer blows which can be very loud and annoying.

With these objections in mind, it is the primary purpose of this invention to provide an alternating current solenoid of the character described which is singularly free of hum and buzz in the attracted position of its plunger, and in which hammer blow is minimized when the plunger reaches its attracted position.

Another purpose of this invention resides in the provision of a solenoid of the character described with a coil carrying bobbin in which the solenoid plunger is guided, and which bobbin is so mounted on the solenoid frame that it can be rotated to and releasably held in any one of a number of different positions of angular adjustment about its axis to thereby enable terminals projecting from the coil to be disposed where they are most accessible for any particular wiring plan.

With the above and other objects in view which will appear as the description proceeds, this invention resides in the novel construction, combination and arrangement of parts substantially as hereinafter described and more particularly defined by the appended claims, it being understood that such changes in the precise embodiments of the hereindisclosed invention may be made as come within the scope of the claims.

The accompanying drawings illustrate several examples of the physical embodiment of the invention, constructed according to the best modes so far devised for the practical application of the principles thereof, and in which:

FIGURE 1 is a side view of a solenoid of this invention, showing the same partly in section and partly in elevation and with its plunger in an extended position;

FIGURE 2 is a view similar to FIGURE 1 but showing how the plunger is cushioned when it reaches its attracted position;

FIGURE 3 is a view similar to FIGURE 2 but illustrating the plunger in a final seated position and tilted (to an exaggerated degree) out of parallelism with the bobbin axis;

FIGURE 4 is a group perspective view of several of the main components of the solenoid;

FIGURE 4*a* is a fragmentary view of part of the solenoid shown in FIGURE 1, but illustrating a slightly modified embodiment of the invention; and

FIGURES 5 and 6 are views similar to FIGURE 3 but illustrating modified embodiments of the invention.

Referring now to the accompanying drawings, the numeral **10** generally designates the substantially U-shaped magnetically permeable frame of the solenoid of this invention. As is conventional, the frame is a sheet metal stamping formed with a bight portion **11** that provides a substantially flat base, and opposite front and rear legs **12** and **13**, respectively, which project perpendicularly upwardly from the ends of the base in substantially parallel relation to one another.

The coil **14** is wound upon the tubular portion **15** of spool shaped bobbin **16**, between front and rear flanges **17** and **18**, respectively, on the bobbin. The bobbin, of course, is mounted in the frame, between the legs thereof, with the axis of the bobbin substantially parallel to the base **11** of the frame and substantially coaxial with a hole **19** in the front leg **12** and with a plug-like plunger stop **20** that projects into the rear of the bobbin from the rear leg **13** of the frame.

The plunger or armature **21** of the solenoid is cylindrical and of solid construction. It is guided for axial back and forth sliding motion in the tubular portion **15** of the bobbin, between an extended position such as seen in FIGURE 1, and an attracted position defined by the engagement of its inner end with the stop **20**.

The solenoid of this invention departs from the conventional in several important respects. Whereas in the past, the plunger stop was fixed in a hole in the rear leg of the frame and projected snugly into the tubular portion of the bobbin to locate the latter on the frame, the plunger stop **20** here fits within the tubular portion of the bobbin with substantial clearance between its periphery and the surrounding wall of the bobbin. Hence, the stop **20** plays no part in location of the bobbin on the frame.

Instead, interengaging surfaces on the rear flange **18** of the bobbin and on the rear leg **13** of the frame are relied upon to accurately locate the bobbin on the frame. For this purpose, the bobbin flange **18** is formed with a flat rearwardly facing surface **23** which is normal to the bobbin axis and which intimately seats against the flat inner face of the rear frame leg **13** to assure that the axis of the bobbin will be exactly normal to the leg **13**. These interengaging surfaces further include the peripheral surface of a boss **24** integral and coaxial with the bobbin and projecting rearwardly from its flange **18**, and the edge of a recess **25** in the rear leg **13** of the frame, into which the boss projects.

The recess **25** is defined by a hole substantially coaxial with the hole **19** in the front leg of the frame, and it is sized to substantially snugly but axially slidingly receive the boss **24**. If desired the boss and the hole **24** can have

a hexagonal shape as shown, although other noncircular but regular geometrical shapes would serve as well to hold the bobbin against rotation on its axis, relative to the frame, as long as the boss remains engaged in its correspondingly shaped recess.

A resilient wave washer **26**, confined in a shallow forwardly opening well **27** in the front flange **17** of the bobbin and reacting against the front leg **12** of the frame, at all times exerts force on the bobbin to urge it rearwardly so as to maintain the boss **24** engaged in its recess and to hold the flat surface **23** on the rear bobbin flange **18** pressed firmly against the inner face of the rear frame leg **13**.

It should be noted that there is a slight space **28** between the front bobbin flange **17** and the adjacent frame leg **12**, which space is slightly greater than the axial depth of the boss **24** to allow the bobbin to be assembled into the frame from either side thereof or from its open end. The space **28** also allows the bobbin to be forced axially forwardly against the action of the resilient wave washer the extent necessary to disengage the boss **24** from its recess **25**, to free the bobbin for rotational adjustment relative to the frame to a new position at which its noncircular boss again registers with the recess **25**. This feature makes terminals **29** on the exterior of the coil accessible in any of a number of different positions to facilitate connection of the solenoid in an energizing circuit.

As mentioned earlier, the hole defining the recess **25** is substantially coaxial with the hole **19** in the front leg **12** of the frame. Exact coaxiality of these holes is seldom achieved with ordinary production methods of stamping and forming the sheet metal of which the frame is made. According to this invention, it is of no consequence if the hole **19** in the front leg of the frame is not coaxial with the hole or recess **25** in the rear leg of the frame, and hence eccentric to the bobbin axis. The hole **19** is substantially larger in diameter than the plunger **21**, being substantially twice the diameter of the latter and it is not relied upon in any way to hold the bobbin in place or locate it upon the frame.

This contrasts with past solenoids of this type, where the hole in the front leg of the frame was made larger than the plunger by only the slight amount necessary to accommodate a short thin walled pilot on the bobbin somewhat loosely encircling the plunger and projecting forwardly into the hole in the frame. A plunger stop fixed in a hole in the rear leg of the frame and closely fitted into the rear of the bobbin cooperated with the pilot to locate and hold the bobbin in place upon the frame. As a result, if the hole in the front frame leg was not coaxial with the hole in the rear frame leg, as was most often the case, the bobbin had to be twisted or tilted about its pivoted end after being wedged down between the frame legs, to enable the neck on a plug-like plunger stop previously inserted into the bobbin to be brought into register with the hole in the rear frame leg for the riveting or swaging operation customarily employed to secure the stop to the frame.

As a consequence, the bobbins of conventional solenoids were frequently mounted in noticeably cocked positions on their frames, with their axes tilted out of normal to the frame legs and away from coincidence with the axis of the small plunger receiving hole in the front leg of the frame. When this occurred, it was inevitable that the plunger, being guided by the tubular portion of the bobbin, would be eccentric to the hole in the front of the frame. In its attracted position, therefore, it would be subjected to a strong side pull by reason of such eccentricity. This side pull is one of the main reasons for the hum and buzz inherent in A.C. solenoids of the type herein concerned; and it is present in such solenoids even though the holes in the frame legs are coaxial because the necessary tolerance between the bobbin pilot and the plunger always allows tilting movement of the forward end portion of the plunger to an eccentric position in the hole in the front leg of the frame.

The hole **19** in the front leg of the solenoid of this invention is so much larger in diameter than the plunger as to eliminate hum or buzz producing side pull on the plunger even though a marked degree of eccentricity may exist between the plunger and the hole. Since the large size of this hole would leave a high reluctance air gap in the magnetic circuit through the plunger at the front of the frame, a large diameter collar or flange **30** of magnetically permeable material is so fixed to the outer end of the plunger that it will closely overlie a substantial area of the front leg of the frame outwardly of the edge of its hole **19** in the attracted position of the plunger. Consequently, the flange **30** completes the magnetic circuit at the front of the frame.

While the plunger stop **20** is carried by the rear leg of the frame and quite loosely projects into the tubular portion **15** of the bobbin from the rear thereof, it is not fixed to the frame but is free to swivel around in any direction necessary to assure intimate contact between its flat inner end **31** and a cooperating flat surface **32** on the inner end of the plunger, normal to the plunger axis.

For this purpose, the reduced outer end of the stop **20** is centrally riveted to a magnetically permeable washer **33** of a size to overlie a substantial surface area of the rear leg **13** of the frame outwardly of the edge of the hole **25** therein, and a fulcrum washer **34** of non-magnetic material, such as nylon for example, is interposed between the washer **33** and the end surface of the boss **24** on the bobbin. The three components comprising the stop **20** and washers **33** and **34** provide a stop assembly which is mounted on the frame by means of a bail shaped wire spring **35**. The opposite arms of the bail spring are connected as at **36** to the rear frame leg, and its bight **37** extends across the peened over head **38** on the outer end of the plunger stop to be loosely received in a cross slot **39** therein. The spring, of course, exerts force on the stop to cause the fulcrum washer **34** to be firmly clamped between the washer **33** and the adjacent end of the boss **24** on the bobbin, and thus define the normal position of the stop **20**.

It should be noted that the cross slot in the head **39** has a rounded bottom **40** which cooperates with the slot to enable rocking or swiveling motion of the stop **20** in all directions limited, of course, by the amount of clearance between the stop and the bore of the bobbin.

The fulcrum washer **34** loosely fits within the hole **25** in the rear leg **13** of the frame, and it also loosely surrounds the cylindrical inner portion of the stop forwardly of the washer **33** thereon. It is formed with a first pair of rounded diametrically opposite radially extending fulcrum lugs **42** which project from its inner face and bear upon the end of the bobbin boss **24**, and it has a second pair of similar fulcrum lugs **43** which project from its outer face and bear against the forwardly facing surface of the stop carried washer **33**. The two pairs of fulcrum lugs **42–43** are displaced at an angle of 90° from one another, so that the washer **33** and the stop carried thereby can rock about either or both of the two transverse axes provided by the lugs.

The stop **20** can thus be considered as capable of universal rocking or swiveling motion relative to the frame, so that it can be automatically shifted by contact of the inner end of the plunger therewith to whatever position will bring its flat inner surface **31** into intimate engagement with the flat rear surface **32** on the plunger.

This self-adjusting mounting for the stop **20** eliminates a second cause of hum and buzz in A.C. solenoids of the type herein concerned. Hum and buzz often occurred in the past because of improper seating of the plunger against its stop, particularly in the event the plunger was held by the load connected thereto in a cocked position with its axis tilted lengthwise out of parallelism with that of the bobbin. FIGURE 3 exaggeratingly illustrates such a

cocked attitude of the plunger in its attracted position, and shows how the stop **20** of the solenoid of this invention can tilt to match the tilted attitude of the plunger. FIGURE 3 also illustrates how the two large magnetically permeable washers **30** and **33** on the plunger and the stop **20** cooperate with the frame legs **12** and **13** to complete a substantially low reluctance flux path through the plunger despite the presence of the relatively large holes **19** and **25** in the opposite legs of the frame.

Another important feature of the solenoid of this invention derives from the particular swivel mounting of the plunger stop **20** in the manner described. By that mounting the plunger stop **20** can move rearwardly against the force exerted on it by the bail spring **35**, at times when the stop is impinged by the plunger at the end of its attraction stroke to cushion the impact of the plunger thereon. This action of the stop can be seen from FIGURE 2, where it will be apparent that the inertia force in the plunger is partly absorbed by the combined mass of the stop **20** and the large washer **33** to which it is affixed when the plunger initially strikes the stop. The bail spring **35** yieldingly absorbs the remainder of this inertia force to very effectively cushion the hammer blow imposed upon the stop by the plunger.

It is important, of course, to guard against the possibility of the magnetically permeable washer **33** tilting into contact with the rear leg **13** of the frame in the energized condition of the solenoid. If it did, it could freeze magnetically to the frame and cause the same type of chattering or humming noise that this invention seeks to eliminate.

While this condition will not ordinarily be encountered if the stop assembly shown in FIGURES 1 to 3 is properly designed, positive assurance against the possibility of the outer washer **33** coming into contact with the rear leg of the frame may be had if the stop assembly incorporates a slightly modified form of wobble plate or fulcrum washer **34'** such as seen in FIGURE 4*a*.

As therein shown, the fulcrum washer is formed with a thin rim portion **60** which is normal to the axis of the washer and overlies the outer surface of the rear leg **13** of the frame. The rim portion **60** preferably has a diameter substantially equal to that of the metal outer washer **33**, and it is normally spaced from the latter and from the adjacent leg of the frame. This spacing enables the stop **20** and the outer washer **33** to tilt whatever slight amounts are necessary to bring the squared inner end of the stop into intimate engagement with the opposing squared end of the plunger, while maintaining the rim portion **60** at all times interposed between the rear leg of the frame and the outer washer **33**.

A so-called residual spring **45** can also be provided to assure against the tendency of the plunger to remain in its attracted position under the effects of residual magnetism at times when the coil is de-energized. The spring can comprise a single convolution of spring wire encircling the outer end portion of the plunger rearwardly of the washer **30** thereon, and of a diameter to readily clear the inner edges of the wave washer and bear upon the forward end of the bobbin when the plunger travels to its attracted position.

The solenoids seen in FIGURES 5 and 6 operate with the same characteristic absence of hum and buzz as that first described, but lack the plunger cushioning feature thereof. In the solenoid of FIGURE 5, the rear leg **13** of the frame is formed with a recess **25'** of hexagonal or other regular geometric shape, which opens forwardly toward the bobbin to slidingly receive the correspondingly shaped boss **24** on the rear thereof. The recess **25'**, in this case, is not punched through the leg but has a flat bottom **47** in which the plunger stop **20'** is fixed, as by riveting or swaging. The plunger stop **20'** may again fit somewhat loosely into the tubular portion **15** of the bobbin, since it is not relied upon to locate the bobbin on the frame, and it has a flat inner end surface **48** normal to the leg **13**. The plunger **21'**, however, is provided with a rounded or shallow conical rear end **49** which engages the stop to define the attracted position of the plunger. In all other respects, the solenoid of FIGURE 5 is the same as that described previously. The rounded or shallow conical inner end **49** on the plunger **21'**, of course, enables good seating of the plunger against the stop even though the plunger may be cocked or tilted out of coincidence with the bobbin axis, as seen in exaggerated fashion in FIGURE 5.

The solenoid of FIGURE 6 is like that of FIGURE 5, except that the attracted position of its plunger **121** is defined by the engagement of its rounded inner end **49** directly with the flat bottom **47** of the hexagonal recess **25'** in the rear leg **13** of the frame. Since the solenoid of FIGURE 6 has no plug-like plunger stop, the plunger is made somewhat longer, so that the magnetically permeable flange or washer **30** on its outer end will not contact the front leg **12** of the frame before the inner end of the plunger strikes the bottom **47** of the noncircular recess in the rear leg of the frame.

Again in this case, the plunger is shown in an exaggeratingly cocked or tilted position to make it more apparent that such cocking of the plunger is possible without danger of any external portion thereof approaching the edge of the hole **19** in the forward leg of the frame closely enough to result in hum or buzz producing side pull on the plunger.

From the foregoing description, together with the accompanying drawings, it will be readily apparent to those skilled in the art that this invention provides an A.C. solenoid of the solid plunger type, which is singularly free of hum and buzz and in which hammer blow can be reduced to a substantial extent.

What is claimed as my invention is:

1. A solenoid of the type comprising a coil mounted on a bobbin having a tubular portion coaxial with the coil and flanges at its opposite ends between which the coil is confined, a plunger guided in the tubular portion of the bobbin for endwise reciprocatory motion between an extended position and a defined attracted position, and a magnetically permeable frame having spaced substantially parallel legs between which the bobbin is axially received, one of said legs having an opening through which an outer portion of the plunger projects, said solenoid being further characterized by the following:

(A) resilient means acting upon one end of the bobbin to yieldingly hold the same in a predetermined axial position defined by the engagement of the opposite end of the bobbin with the adjacent leg of the frame;

(B) means holding the bobbin with its tubular portion substantially centered with respect to said plunger opening, and preventing all but axial motion of the bobbin in a direction away from said adjacent leg of the frame, said means comprising interengaging surfaces on said opposite end of the bobbin and on said adjacent leg of the frame maintained in cooperative relationship by said resilient means, said surfaces being disengageable in consequence of axial movement of the bobbin in said direction to release it for rotary motion about its axis, and said surfaces being adapted to interengage and nonrotatably hold the bobbin in any one of a plurality of different positions of angular adjustment on its axis;

(C) and terminals fixed on and projecting from the exterior of the coil, said terminals being positionable in any one of a plurality of different attitudes relative to the frame corresponding to the angular disposition of the bobbin on the frame.

2. The solenoid of claim **1**, further characterized by:

(A) said opposite end of the bobbin and the adjacent leg of the frame constituting cooperating members;

(B) and said interengaging surfaces comprising surfaces on the edge of a recess in one of said members, which recess opens toward the other of said members and is of noncircular but regular geometri-

cal shape, and cooperating surfaces on the exterior of a boss on said other member, which boss engages in said recess and has a corresponding shape.

3. The solenoid of claim 2, further characterized by:

(A) said recess being defined by a well in said adjacent leg of the frame;

(B) and said boss being on said opposite end of the bobbin and being coaxial therewith.

4. The solenoid of claim 3, further characterized by:

(A) said well having a bottom defined by an axially outwardly offset portion of said adjacent leg of the frame;

(B) and the inner end of the plunger engaging the bottom of said well to define the attracted position of the plunger.

5. The solenoid of claim 3, further characterized by a plunger stop fixed to the bottom of the well and projecting coaxially into said tubular portion of the bobbin from said opposite end thereof for engagement by the inner end of the plunger to define the attracted position of the latter.

6. The solenoid of claim 1, further characterized by:

(A) mating flat surfaces on said opposite end of the bobbin and said adjacent leg of the frame held in engagement with one another by said resilient means and disposed to position the bobbin with its axis normal to said adjacent leg of the frame;

(B) said opening through which the plunger projects being substantially larger than the plunger and having its edge remote from the exterior of the plunger so as to minimize vibration producing side pull on the plunger in its attracted position in the event the plunger is not coaxial with said opening;

(C) and a magnetically permeable flange on the projecting portion of the plunger, having a surface of substantial area which is brought into contiguous relation to the surface of said one frame leg outwardly of the edge of the opening therein upon movement of the plunger to its attracted position, to provide a low reluctance flux path between said one leg of the frame and the plunger.

7. A solenoid of the type comprising a coil mounted on a bobbin having a tubular portion coaxial with the coil and flanges at its opposite ends between which the coil is confined, a plunger guided in the tubular portion of the bobbin for endwise reciprocatory motion between an extended position and a defined attracted position, and a magnetically permeable frame having spaced substantially parallel legs between which the bobbin is axially received, one of said legs having an opening through which an outer portion of the plunger projects, said solenoid being further characterized by the following:

(A) said plunger having a flat stop engaging surface on its inner end, which surface is normal to the plunger axis;

(B) the other leg of the frame having a hole therein substantially coaxial with the bobbin;

(C) a plunger stop loosely received in said hole and projecting loosely into the adjacent tubular portion of the bobbin, and having a flat surface which is engageable by the plunger in the attracted position thereof;

(D) means carried by the frame defining the innermost position of the plunger stop, from which it can be moved outwardly by the plunger when the latter strikes the stop;

(E) spring means acting upon the stop to normally hold the same in its innermost position, said spring means being adapted to yield momentarily under plunger produced outward motion of the stop to cushion hammer blow incidental to engagement of the plunger with the stop;

(F) and means mounting the stop on the frame for a degree of substantially universal tilting motion to provide for self-adjustment of the stop to the position necessary to enable its plunger engaging surface to flatwise mate with the stop engaging surface on the plunger in the event the latter assumes a cocked attitude at which its axis is disposed at an angle to the bobbin axis in the attracted position of the plunger.

8. A solenoid of the type comprising a coil mounted on a bobbin having a tubular portion coaxial with the coil and flanges at its opposite ends between which the coil is confined, a plunger guided in the tubular portion of the bobbin for endwise reciprocatory motion between an extended position and a defined attracted position, and a magnetically permeable frame having spaced substantially parallel legs between which the bobbin is axially received, one of said legs having an opening through which an outer portion of the plunger projects, said solenoid being further characterized by the following:

(A) the other leg of the frame having a hole therein substantially coaxial with the bobbin;

(B) the inner end of the plunger having a flat stop engaging surface thereon normal to its axis;

(C) a plunger stop mounted on the frame adjacent to said other leg thereof for back and forth motion along the bobbin axis and for wobbling movement relative to the frame, said stop having a flat ended portion projecting through said hole and into the tubular portion of the bobbin from the adjacent end of the latter;

(D) cooperating means on said other leg of the frame and on the stop limiting motion of the latter into the tubular portion of the bobbin and defining the normal position of the stop, from which position the stop is displaceable upon being struck by the plunger when the latter responds to energization of the coil;

(E) and resilient means acting upon the stop to yieldingly resist such displacement thereof and thereby cooperate with the stop in yieldingly absorbing the impact of the plunger on the stop when the plunger reaches its attracted position, said resilient means permitting the stop to wobble and adjust itself to whatever position is necessary to matingly engage its flat ended portion with the flat surface on the plunger in the event the latter occupies an attracted position with its axis non-coincident with that of the bobbin.

9. The solenoid of claim 7, wherein said stop is part of an assembly comprising the following:

(A) a magnetically permeable washer fixed to the stop and closely overlying a substantial surface area of said other leg of the frame at the exterior thereof;

(B) and a wobble plate loosely carried by the stop and confined between said washer and a part carried by the frame, said wobble plate having means on one face thereof providing a fulcrum disposed transversely of the bobbin axis and upon which the washer seats to enable it and the stop to tilt relative to the frame about a first transverse axis, and having means on its opposite face providing another fulcrum disposed transversely of the bobbin axis and at right angles to said first fulcrum, said second fulcrum bearing against said frame carried part to enable the assembly provided by the wobble plate, the washer and the stop to tilt relative to the frame about a second transverse axis displaced 90° from said first axis.

10. The solenoid of claim 9, further characterized by:

(A) the hole in said other leg of the frame loosely accommodating the wobble plate;

(B) and said other fulcrum engaging the adjacent end of the bobbin.

11. The solenoid of claim 9, further characterized by means on the wobble plate engageable by the stop carried washer to prevent contact between the latter and said other leg of the frame.

12. The solenoid of claim 9, wherein said last named

means comprises a thin circumferential rim portion on the periphery of the wobble plate, having a diameter at least as great as that of the stop carried washer and at all times interposed between the latter and said other leg of the frame.

References Cited

UNITED STATES PATENTS

2,480,057 8/1949 Soreng et al. ____ 335—262 XR

3,117,257 1/1964 Stone _____ 335—262 XR

3,134,932 5/1964 Ray _____ 335—248 XR

3,185,902 5/1965 Fecho et al. _____ 335—247 XR

BERNARD A. GILHEANY, *Primary Examiner.*

GEORGE HARRIS, *Assistant Examiner.*