AU9212325

(12) PATENT ABRIDGMENT (11) Document No. AU-B-12325/92
(19) AUSTRALIAN PATENT OFFICE (10) Acceptance No. 663696

(54) Title
DEVICE FOR ROUTING COINS

International Patent Classification(s)
(51)[5] **G07F 003/04**

(21) Application No. : **12325/92** (22) Application Date : **18.02.92**

(87) PCT Publication Number : **WO92/16917**

(30) Priority Data

(31) Number	(32) Date	(33) Country
9106010	**21.03.91**	**GB UNITED KINGDOM**

(43) Publication Date : **21.10.92**

(44) Publication Date of Accepted Application : **19.10.95**

(71) Applicant(s)
MARS INCORPORATED

(72) Inventor(s)
TREVOR THOMPSON

(74) Attorney or Agent
WATERMARK PATENT & TRADEMARK ATTORNEYS , Locked Bag 5, HAWTHORN VIC 3122

(57) Claim

1. A device for selectively routing coins moving edgewise on to either of two paths, the coins being orientated in a plane containing the direction of movement of the coins, and the device comprising a flap (12) pivotable about an axis (Y) such that its upstream end is selectively movable between two positions, one on each side of said plane, to cause the coin to go either to one side or to the other side of the flap depending upon the position of the flap, an electrically powered actuator for selectively moving the flap (12) between the two positions, a coin support (16) arranged to support, from below and at its edge, a coin going to said one side of the flap, so that the coin continues edgewise and on edge on the support past the flap, and an open region arranged such that a coin going to said other side of the flap will fall edgewise into the open region, characterised in that the open region extends at least partially upstream of the pivot axis (Y).

OPI DATE 21/10/92 APPLN. ID 12325 / 92
AOJP DATE 26/11/92 PCT NUMBER PCT/GB92/00286
IN ATION TREATY (PCT)

(51) International Patent Classification 5 : G07F 3/04

A1

(11) International Publication Number: WO 92/16917

(43) International Publication Date: 1 October 1992 (01.10.92)

(21) International Application Number: PCT/GB92/00286

(22) International Filing Date: 18 February 1992 (18.02.92)

(30) Priority data:
9106010.3 21 March 1991 (21.03.91) GB

(71) Applicant *(for all designated States except US)*: MARS INCORPORATED [US/US]; 6885 Elm Street, McLean, VA 22101-3883 (US).

(72) Inventor; and
(75) Inventor/Applicant *(for US only)* : THOMPSON, Trevor [GB/GB]; Trinity Cottage, Quarley, Nr. Andover, Hampshire SP11 8PZ (GB).

(74) Agent: R.G.C. JENKINS & CO.; 26 Caxton Street, London SW1H ORJ (GB).

(81) Designated States: AT (European patent), AU, BE (European patent), CA, CH (European patent), DE (European patent), DK (European patent), ES (European patent), FR (European patent), GB (European patent), GR (European patent), IT (European patent), JP, KR, LU (European patent), MC (European patent), NL (European patent), SE (European patent), US.

Published
With international search report.

663696

(54) Title: DEVICE FOR ROUTING COINS

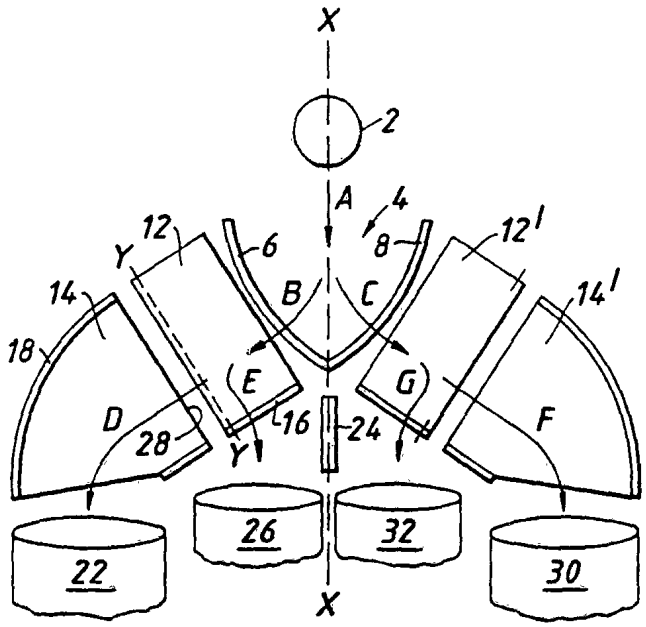

(57) Abstract

A device for selectively routing coins (2) moving edgewise on to either of two paths (D, E), comprising a flap (12) lying generally in the plane of movement of a coin, the flap being pivoted (Y-Y) such that its upstream end is selectively movable between two positions to cause the coin to go either to one side or to the other side of the flap depending upon the position of the flap, a coin support (16) arranged to support a coin going to said one side of the flap, so that the coin continues edgewise (on path D) past the flap, and an opening into which a coin going to said other side of the flap will fall edgewise (on path E).

DEVICE FOR ROUTING COINS

This invention relates to the routing of moving coins in coin handling equipment, and provides a device and apparatus for that purpose.

In goods vending machines, gaming machines, and other applications it is well known to provide a coin mechanism which includes an electronic coin validator which can determine the authenticity and denomination of inserted coins, storage means, normally in the form of respective tubes for storing accepted coins of respective different denominations, a coin routing apparatus controlled by signals from the validator indicative of the denomination of each coin and operable to cause the coin to be delivered to the correct tube, and a payout system for paying out coins stored in the tubes, either as change or as prize money.

The present invention is concerned with devices and apparatus which may be utilised in routing coins, for example from the validator to the coin tubes of a coin mechanism such as that just referred to.

It has been common for such coin mechanisms to have four or perhaps more coin tubes standing vertically and arranged in a row. Different coin denominations have been separated from each other by

means of a plurality of solenoid-operated gates which define different routes for different coin denominations when they are actuated in different combinations.

The passageways along which coins travel in such coin mechanisms are almost always arranged so that the coins travel edgewise at least through the validating and coin routing parts of the mechanism. One type of gate which has been used frequently in routing the coins is often referred to as a "flipper" gate and comprises a flap which is pivoted such that its upstream end (relative to the direction of travel of coins) is selectively movable between two positions to cause the coin to go either to one side or to the other side of the flap depending on the position of the flap. This is a very simple arrangement and it is easy to move the flap between its two positions using a solenoid.

Because of the nature of that type of gate, coins leaving the flap on one side of it will be on a path only a few millimetres, or a few coin thicknesses, away from coins which leave the other side of the flap, the two coins then travelling in planes generally parallel to each other but not spaced far apart. The coin tubes, into the tops of which the coins need to be routed, are of necessity on centres

spaced apart by distances of the order of at least a typical coin diameter. It has therefore been necessary to provide, in addition to a gating arrangement which causes initial separation of the coin paths, a manifold section which spreads the paths further apart so as to match them to the positions of the tops of the coin tubes. The need for both separation and manifolding requires a substantial amount of vertical space within the coin mechanism. The overall size of a coin mechanism is constrained by industry standards and machine design requirements, and it is desirable within that constraint to maximise the space available for coin storage and consequently to minimise the space occupied by the other components of the system, including the coin routing and manifolding arrangements.

The invention provides a device for selectively routing coins moving edgewise on to either of two paths, comprising a flap lying generally in the plane of movement of a coin, the flap being pivotable about an axis such that its upstream end is selectively movable between two positions to cause the coin to go either to one side or to the other side of the flap depending upon the position of the flap, an electrically powered actuator for selectively moving the flap between the two positions, a coin support arranged to support, from below and at its edge, a coin going to said one side of the flap, so that the

United ... Office ...

coin continues edgewise and on edge on the support past the flap, and an opening into which a coin going to said other side of the flap will fall edgewise, characterised in that the device is arranged such that a coin going to said other side of the flap will begin thus to fall at a position upstream of the pivot axis.

Although a simple and compact "flipper" type of gate is used, coins leaving the flap on the two different routes follow paths which over a short distance become spaced fairly widely apart, by much more than the few millimetres of spacing normally associated with the use of "flipper" gates. There is a wide angular divergence of the two paths in the plane in which the coin was originally travelling, in addition to a relatively small and not particularly significant divergence in the direction perpendicular to that plane. This enables a reduction in the total volume taken up for the purpose of separating and manifolding coins of two different denominations.

In a particular form, the invention provides apparatus for selectively routing coins moving edgewise onto any one of four paths, comprising means for selectively directing arriving coins onto either of two paths which diverge in the plane of movement of the coins, and a respective device of the type in accordance with the invention as defined earlier, arranged to receive coins directed to each of said two

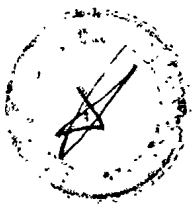

Office
plication

diverging paths.

In an embodiment to be described, a particular type of V-shaped gate is used to achieve the initial selective direction onto either of two divergent paths and it will become apparent that in conjunction with two "flipper" type gates in accordance with the invention this enables manifolding into four different coin tubes to be achieved within a height not much greater than that which is utilised for the purpose simply of separating the different coin denominations.

In order that the invention may be more clearly understood, an embodiment thereof will now be described with reference to the accompanying drawings in which;

Figure 1 is a front elevation of an apparatus for routing coins onto four paths in accordance with the invention, and

Figure 2 is a partial top view of the same apparatus showing the components spread laterally for the purpose of clarity.

The apparatus is to a large extent symmetrical about a plane indicated by the broken lines X-X in Figures 1 and 2 and extending perpendicular to the plane of those drawings. Figure 2 shows only the left-hand half fully.

A coin 2 travels vertically and substantially in

the plane of Figure 1 on an initial path A into the apparatus from, for example, the valid coin outlet of an electronic coin validator.

The coin first enters a generally V-shaped gate indicated at 4 which comprises two coin deflectors 6 and 8 formed as a unitary part and which form the V. Looking down on gate 4, as in Figure 2, it can be seen that the deflectors 6 and 8 are displaced relative to each other in a direction substantially perpendicular to the plane of the V. The gate is also movable in that same direction between the position shown in full lines in Figure 2 and the position shown in broken lines at 4' in Figure 2, movement being along the direction of the double-headed arrow 10. The mounting of the gate for such movement, and the arrangement of a solenoid which can impose that movement selectively, are well within the competence of an engineer skilled in the art and therefore need not be described in detail.

When gate 4 is in its full-line position an arriving coin 2 will be deflected leftwards onto path B by deflector 8 as will be clear from Figure 2. When gate 4 is in the broken-line position, the coin will be deflected to the right on path C, which path is shown in broken lines in Figure 2.

Referring to Figure 1, it can be seen that when

a coin is initially deflected onto path B, it will next encounter a flap 12 followed by a component 14. Illustration of these components exactly as seen from above is difficult, and the results unclear, because they would to a substantial effect be overlapping each other. For the purpose of the top view in Figure 2, the flap 12 is shown displaced to the left so that it is clear of deflector 6, rather than partially below it, and similarly component 14 is shown displaced to the left relative to flap 12, so that it is spaced from the flap rather than below it.

Flap 12 is pivoted about an axis Y which is close to its trailing end. It is actuated between two positions, namely the positions shown respectively in full lines and in broken lines in Figure 2, by means of a solenoid. The solenoid and its coupling to the gate need not be shown because they are well within the capabilities of an engineer skilled in the art. At the bottom of flap 12, and integral and movable with it, there is a coin support 16 in the form of a projection or shelf along the lower edge of the flap and substantially at right angles thereto. Component 14 includes an outer guide wall 18 and an inner guide wall 20 which both protrude in a direction perpendicular to the plane of Figure 1, as can be seen in Figure 2.

When V-shaped gate 4 has been set to deflect a coin onto path B, and flap 12 is set to the full line position, then deflector 8, coin support 16 and inner guide 20 effectively form an interrupted coin track so that the coin will, because of the position of flap 12, roll in front of flap 12 (as viewed in Figure 1) along the coin support 16 onto guide 20, following path D which leads it to a coin tube 22.

When the V-shaped gate 4 is in the same position, but the flap 12 is shifted to the broken-line position as shown in Figure 2, then the coin on path B will pass behind flap 12 as viewed in Figure 1 and, as it does so, leaving the lower end of deflector 8 it finds itself above an opening lying between inner guide 20 and a central partition 24 shown in Figure 1, through which opening it drops on path E into coin tube 26. To ensure that the coin falls through this opening, component 14 is provided with a wall 28 which faces a coin passing behind flap 12 on path B so that the coin will hit the wall and drop down it on path E.

As has been mentioned, when the V-shaped gate 4 is switched to the broken-line position in Figure 2, the coin 2 will initially take path C. Along that path lie flap 12′ and component 14′ which are equivalent to flap 12 and component 14 already described. Hence, by appropriate actuation of flap

12' the coin can be routed either on path F to coin tube 30 or on path G to coin tube 32.

It will be understood that in the arrangement described above, each time two paths diverge from each other, they do so by a substantial angle, substantially in the plane of Figure 1, and hence over a short vertical distance the paths become widely spaced apart. This enables the coins to be distributed or manifolded into respective different tubes 22, 26, 32 and 30 for respective different denominations, within a vertical dimension not very much greater than that which would be required merely to separate (but not additionally distribute or manifold) the coins in most widely used prior coin handling systems.

Of course, the apparatus shown additionally requires front and rear walls, lying generally in planes parallel to Figure 1, so as to prevent coins from being able to escape from the apparatus in directions perpendicular to that Figure. Such front and rear walls may in fact be made integral with the components 14 and 14' and include respective slots in which deflector 6 can be accommodated when the V-shaped gate 4 is in the full line position of Figure 2, deflector 8 can be accommodated when the gate 4 is in the broken-line position of Figure 2, and the coin

support 16 can be accommodated when the flap 12 is in the broken-line position of Figure 2. The design and provision of such walls to prevent coins escaping in devices of this general kind is well within the ability of those skilled in the art and to seek to illustrate them in the Figures would confuse rather than clarify them.

THE CLAIMS DEFINING THE INVENTION ARE AS FOLLOWS:

1. A device for selectively routing coins moving edgewise on to either of two paths, the coins being orientated in a plane containing the direction of movement of the coins, and the device comprising a flap (12) pivotable about an axis (Y) such that its upstream end is selectively movable between two positions, one on each side of said plane, to cause the coin to go either to one side or to the other side of the flap depending upon the position of the flap, an electrically powered actuator for selectively moving the flap (12) between the two positions, a coin support (16) arranged to support, from below and at its edge, a coin going to said one side of the flap, so that the coin continues edgewise and on edge on the support past the flap, and an open region arranged such that a coin going to said other side of the flap will fall edgewise into the open region, characterised in that the open region extends at least partially upstream of the pivot axis (Y).

2. A device as claimed in claim 1 comprising a wall (28) which faces a coin going to said other side of the flap so that the coin will hit the wall (28) and fall into said open region.

3. A device as claimed in claim 1 or claim 2, wherein said coin support (16) moves with the flap as the flap is moved between its two positions.

4. A device according to claim 3, wherein the coin support (16) extends generally perpendicularly from the flap (12).

5. A device according to claim 3 or 4, wherein the coin support (16) extends from a peripheral edge portion of the flap (12).

PATENT OFFICE AUSTRALIA

6. A device according to claim 3, 4 or 5, wherein the coin support (16) is integrally formed with the flap (12).

7. Apparatus for selectively routing coins moving edgewise on to any one of four receiving paths, comprising means (4) for selectively directing arriving coins on to either of first and second intermediate paths which diverge, a first device for routing a coin in said first intermediate path selectively to either a first receiving path or a second receiving path, and a second device for routing a coin in said second intermediate path selectively to either a third receiving path or a fourth receiving path, wherein said first and second devices each comprise a device as defined in any of claims 1 to 6.

8. Apparatus as claimed in claim 7, wherein said means for selectively directing comprises a generally V-shaped gate (4) comprising two coin deflectors (6, 8) which form the V, the deflectors being displaced relative to each other in a direction perpendicular to the plane of V, and the gate being movable also in that direction so that either one, or the other, of the deflectors can be placed in the path of an arriving coin to deflect the coin and on to a respective one of said two intermediate paths.

9. Apparatus for selectively routing coins moving edgewise on to any one of four receiving paths, comprising means (4) for selectively directing arriving coins on to either of first and second intermediate paths which diverge, a first device for routing a coin in said first intermediate path selectively to either a first receiving path or a second receiving path, and a second device for routing a coin in said second intermediate path selectively to either a third receiving path or a fourth receiving path, wherein each of said first and second devices comprises a flap (12) pivotable about an axis (Y) such that its upstream end is selectively movable between two positions, one on each side of a plane containing the direction of movement of a coin in the respective first or second intermediate path, to cause the coin to go either to one side or to the other side of the flap (12) depending upon the position of the flap (12), an electrically powered actuator for selectively moving the flap (12) between the two positions, a coin support (16) arranged to support, from below and at its edge, a coin going to said one side of the flap so that the coin continues edgewise and on edge on the support past the flap, and an opening into which a coin going to said other side of the flap will fall edgewise.

10. Apparatus as claimed in claim 9, wherein said means for selectively directing comprises a generally V-shaped gate (4) comprising two gate deflectors (6, 8) which form the V, the deflectors being displaced relative to each other in a direction perpendicular to the plane of the V, and the gate being movable also in that direction so that either one or the other of the deflectors can be placed in the path of an arriving coin to deflect the coin and on to a respective one of said two intermediate paths.

11. Apparatus according to claim 9 or 10, wherein each device further comprises a wall (28) which faces a coin going to said other side of the flap (12) so that the coin will hit the wall (28) and fall into said open region.

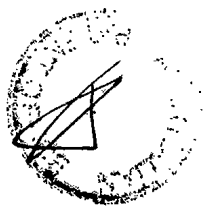

12. Apparatus according to claim 9, 10 or 11, wherein the coin support (16) for each flap (12) moves with that flap.

13. Apparatus according to claim 12, wherein the coin support (16) for each flap (12) extends generally perpendicularly from that flap.

14. Apparatus according to claim 12 or 13, wherein the coin support (16) for each flap (12) extends from a peripheral edge portion of that flap.

15. Apparatus according to claim 12, 13 or 14, wherein the coin support (16) for each flap (12) is integrally formed with that flap.

DATED this 11th day of August 1995

MARS INCORPORATED

WATERMARK PATENT & TRADEMARK ATTORNEYS
LEVEL 4, AMORY GARDENS
2 CAVILL AVENUE
ASHFIELD N.S.W. 2131
AUSTRALIA

LJD:MEJ:GXL DOC15 AU1232592.WPC

1/1

12325/92

FIG. 1.

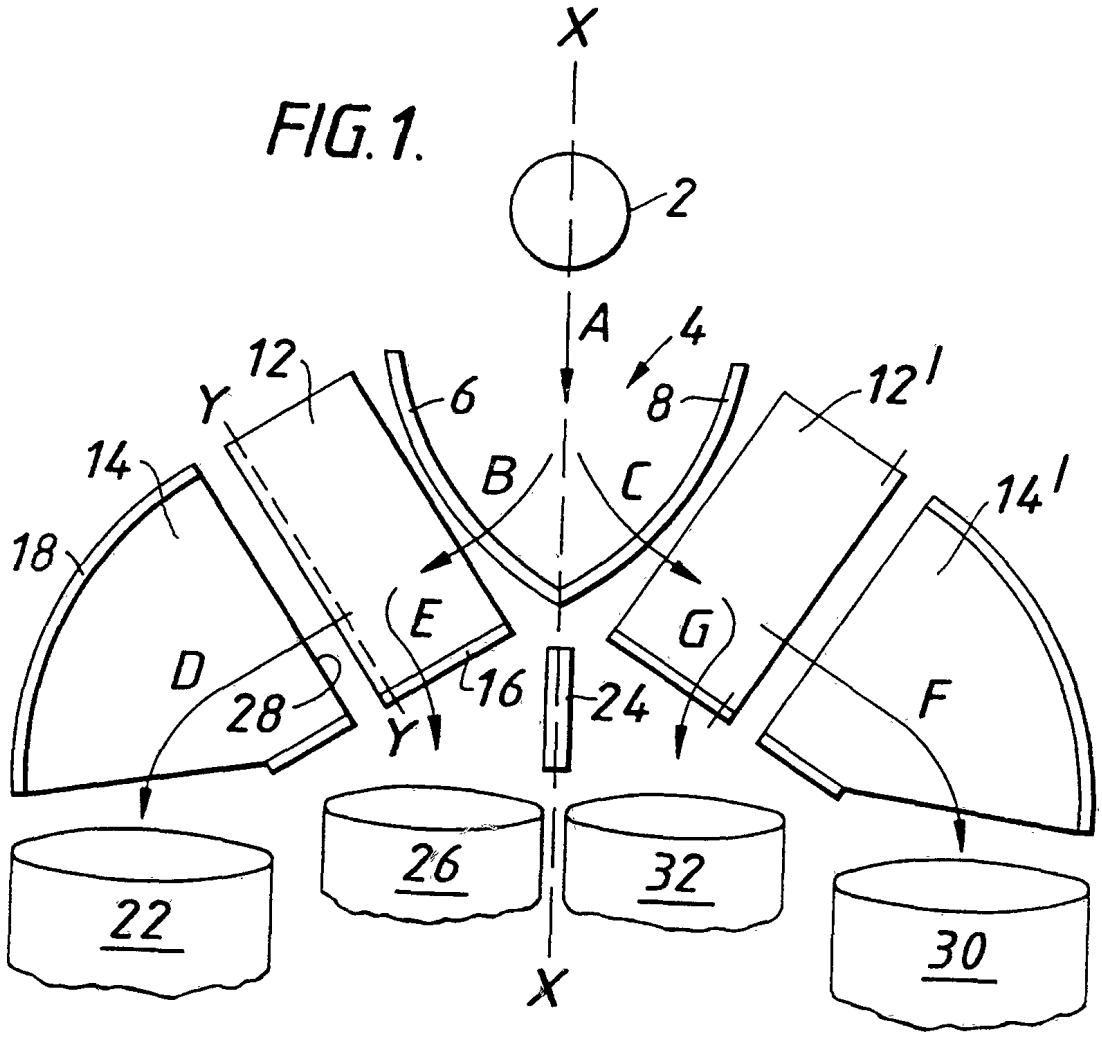

FIG. 2.

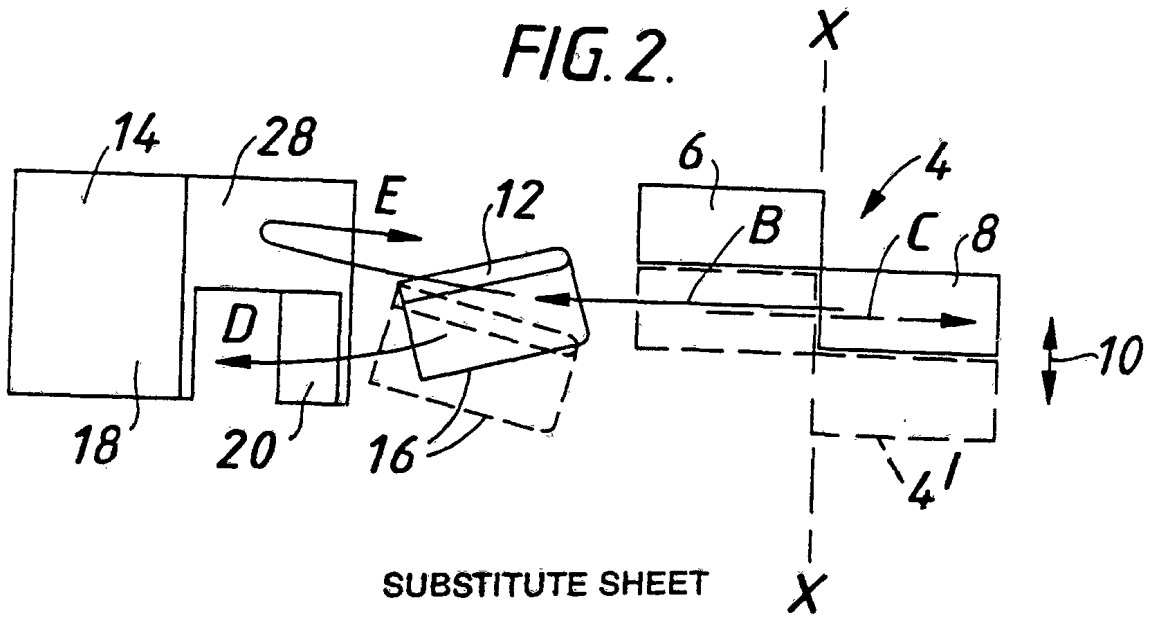

INTERNATIONAL SEARCH REPORT

International Application No PCT/GB 92/00286

I. CLASSIFICATION OF SUBJECT MATTER (if several classification symbols apply, indicate all)[6]

According to International Patent Classification (IPC) or to both National Classification and IPC

Int.Cl. 5 G07F3/04

II. FIELDS SEARCHED

Minimum Documentation Searched[7]

Classification System	Classification Symbols
Int.Cl. 5	G07F

Documentation Searched other than Minimum Documentation to the Extent that such Documents are Included in the Fields Searched[8]

III. DOCUMENTS CONSIDERED TO BE RELEVANT[9]

Category °	Citation of Document,[11] with indication, where appropriate, of the relevant passages[12]	Relevant to Claim No.[13]
Y	GB,A,1 415 559 (LANDIS & GYR) 26 November 1975 see page 2, line 37 - page 3, line 15; figures	1,3
Y	US,A,4 082 099 (G. IWERSEN) 4 April 1978 see column 2, line 9 - column 2, line 56; figures	1,3
A	DE,A,4 001 188 (AZKOYEN INDUSTRIAL) 19 July 1990 see abstract; figures see column 4, line 29 - column 4, line 52	1-5
A	US,A,3 916 922 (G.J. PRÜMM) 4 November 1975 see abstract; figures	1,4,5
A	US,A,4 393 972 (R.M. MALOY) 19 July 1983	

° Special categories of cited documents :[10]

"A" document defining the general state of the art which is not considered to be of particular relevance

"E" earlier document but published on or after the international filing date

"L" document which may throw doubts on priority claim(s) or which is cited to establish the publication date of another citation or other special reason (as specified)

"O" document referring to an oral disclosure, use, exhibition or other means

"P" document published prior to the international filing date but later than the priority date claimed

"T" later document published after the international filing date or priority date and not in conflict with the application but cited to understand the principle or theory underlying the invention

"X" document of particular relevance; the claimed invention cannot be considered novel or cannot be considered to involve an inventive step

"Y" document of particular relevance; the claimed invention cannot be considered to involve an inventive step when the document is combined with one or more other such documents, such combination being obvious to a person skilled in the art.

"&" document member of the same patent family

IV. CERTIFICATION

Date of the Actual Completion of the International Search	Date of Mailing of this International Search Report
04 JUNE 1992	24.06.92
International Searching Authority	**Signature of Authorized Officer**
EUROPEAN PATENT OFFICE	DAVID J.Y.H.

Form PCT/ISA/210 (second sheet) (January 1985)

ANNEX TO THE INTERNATIONAL SEARCH REPORT ON INTERNATIONAL PATENT APPLICATION NO. GB 9200286 SA 56596

This annex lists the patent family members relating to the patent documents cited in the above-mentioned international search report. The members are as contained in the European Patent Office EDP file on
The European Patent Office is in no way liable for these particulars which are merely given for the purpose of information. 04/06/92

Patent document cited in search report	Publication date	Patent family member(s)	Publication date
GB-A-1415559	26-11-75	CH-A- 563627	30-06-75
		DE-B- 2358548	20-02-75
		FR-A,B 2245030	18-04-75
		SE-A- 7411939	23-09-74
US-A-4082099	04-04-78	DE-A- 2419597	30-10-75
		AT-B- 335204	25-02-77
		AU-B- 498363	08-03-79
		AU-A- 8032475	21-10-76
		CA-A- 1052883	17-04-79
		CH-A- 589330	30-06-77
		FR-A- 2268315	14-11-75
		GB-A- 1486519	21-09-77
		JP-A- 50147398	26-11-75
		NL-A- 7504414	21-10-75
		SE-B- 397420	31-10-77
		SE-A- 7504307	20-10-75
DE-A-4001188	19-07-90	GB-A- 2228126	15-08-90
US-A-3916922	04-11-75	DE-A- 2331361	23-01-75
		DE-A- 2331362	23-01-75
		AU-A- 7032874	08-01-76
		JP-A- 50037498	08-04-75
		AU-A- 7032774	08-01-76
		JP-A- 50037499	08-04-75
US-A-4393972	19-07-83	None	