PCT WORLD INTELLECTUAL PROPERTY ORGANIZATION
International Bureau

INTERNATIONAL APPLICATION PUBLISHED UNDER THE PATENT COOPERATION TREATY (PCT)

(51) International Patent Classification 6 : C23C 16/44, 16/00 — A1

(11) International Publication Number: **WO 95/25829**

(43) International Publication Date: 28 September 1995 (28.09.95)

(21) International Application Number: PCT/SE95/00276

(22) International Filing Date: 17 March 1995 (17.03.95)

(30) Priority Data:
9400950-3 18 March 1994 (18.03.94) SE

(71) Applicant: SANDVIK AB [SE/SE]; S-811 81 Sandviken (SE).

(72) Inventors: NORRGRANN, Tor; Dalkarlsvägen 27, S-141 40 Huddinge (SE). PÅLSSON, Kjell; Hökvägen 2, S-740 52 Gimo (SE). LJUNGBERG, Björn; Kulstötarvägen 96, S-122 44 Enskede (SE).

(74) Agents: ÖSTLUND, Alf et al.; Sandvik AB, Patent Dept., S-811 81 Sandviken (SE).

(81) Designated States: JP, European patent (AT, BE, CH, DE, DK, ES, FR, GB, GR, IE, IT, LU, MC, NL, PT, SE).

Published
With international search report.

(54) Title: BATCH LOADING SYSTEM FOR CVD

(57) Abstract

According to the present invention there is provided a method of coating cutting tool inserts by CVD-methods with a completely covering coating. During the coating step the inserts are resting on a support and are in contact with the support in only a few tiny spots and sufficient space is allowed around each insert to ascertain optimum coating conditions. The support is a peg, comprising a foot (A) and shoulders (B), said foot is attached to a carrier. In case the pegs serve also as support for a following carrier placed on top of the carrier, they further comprise a neck (C) and a head (D). This batch loading system allows a rational production in larger scale and fully automatic CVD loading.

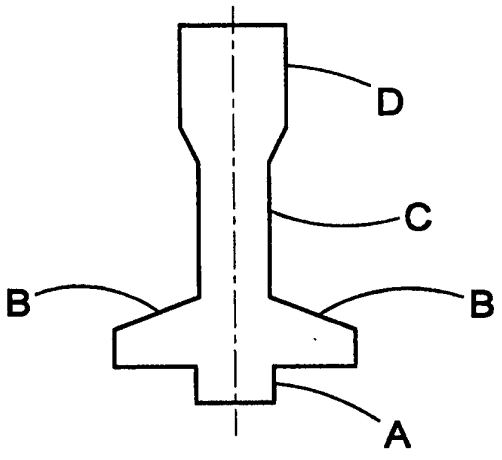

FOR THE PURPOSES OF INFORMATION ONLY

Codes used to identify States party to the PCT on the front pages of pamphlets publishing international applications under the PCT.

AT	Austria	**GB**	United Kingdom	**MR**	Mauritania
AU	Australia	**GE**	Georgia	**MW**	Malawi
BB	Barbados	**GN**	Guinea	**NE**	Niger
BE	Belgium	**GR**	Greece	**NL**	Netherlands
BF	Burkina Faso	**HU**	Hungary	**NO**	Norway
BG	Bulgaria	**IE**	Ireland	**NZ**	New Zealand
BJ	Benin	**IT**	Italy	**PL**	Poland
BR	Brazil	**JP**	Japan	**PT**	Portugal
BY	Belarus	**KE**	Kenya	**RO**	Romania
CA	Canada	**KG**	Kyrgystan	**RU**	Russian Federation
CF	Central African Republic	**KP**	Democratic People's Republic of Korea	**SD**	Sudan
CG	Congo			**SE**	Sweden
CH	Switzerland	**KR**	Republic of Korea	**SI**	Slovenia
CI	Côte d'Ivoire	**KZ**	Kazakhstan	**SK**	Slovakia
CM	Cameroon	**LI**	Liechtenstein	**SN**	Senegal
CN	China	**LK**	Sri Lanka	**TD**	Chad
CS	Czechoslovakia	**LU**	Luxembourg	**TG**	Togo
CZ	Czech Republic	**LV**	Latvia	**TJ**	Tajikistan
DE	Germany	**MC**	Monaco	**TT**	Trinidad and Tobago
DK	Denmark	**MD**	Republic of Moldova	**UA**	Ukraine
ES	Spain	**MG**	Madagascar	**US**	United States of America
FI	Finland	**ML**	Mali	**UZ**	Uzbekistan
FR	France	**MN**	Mongolia	**VN**	Viet Nam
GA	Gabon				

Batch loading system for CVD

The present invention relates to a CVD-batch loading method used in connection with coating of cutting inserts suitable for a rational production in larger scale allowing fully automatic CVD loading.

Chemical vapour deposition (CVD) of wear resistant coatings on cemented carbide inserts has been an industrial practise for more than 20 years. The CVD-technique has extensively been discussed in the literature.

In order to minimise the production costs for coated inserts large sized (10000 - 15000 inserts) CVD-batches are generally used. Rational loading and unloading of the inserts from the CVD-reactor is thus required. Transportation of the whole load or parts of the loads must be possible to be carried out safely particularly prior to the coating operation.

Another problem related to mass volume CVD is to find an appropriate loading arrangement of the inserts that will allow a well controlled gas flow through the CVD-reactor in order to ensure high and even coating quality throughout the whole load.

Yet another problem is to avoid contact marks on the inserts formed during the coating process in the zone between the inserts and their support. Contact marks on the inserts are not acceptable from a cosmetic point of view and also not since they may deteriorate the cutting performance of the coated inserts.

There are many different batch loading systems or methods known in the art.

In one loading arrangement the inserts are allowed to hang in slits in a tray. This method has the disadvantage of leaving contact marks on the clearance faces of the inserts. The system is unstable and there is always a potential risk during transportation that the in-

serts fall over and completely rearrange the packing. In addition, all surfaces of an insert with this type of loading will not be exposed to the same amount of gas flow during the coating process. This may result in serious variation in the coating thickness and hence the quality of the coating.

In another similar system the inserts hang between rods. This system suffers from the same drawbacks as those mentioned for the previous system.

In the so called net loading arrangement the inserts are placed on woven metal nets. The load is built up by piling each metal net on top of each other. When using this method: a) the gas supply to the regions between the inserts and the metal net wire may be insufficient b) care has to be taken during transportation to avoid that inserts slide together resulting in contact marks between individual inserts c) contact marks between the nets and the inserts are always formed.

In yet another method the inserts are threaded up on a rod. Spacers between each insert are generally used to avoid contact between the inserts. The rods may be oriented horizontally or vertically in the CVD-reactor. The main drawbacks of this method are the very complicated and time consuming loading and unloading procedure. Contact marks between the spacer and the inserts are difficult to avoid. This method can be applied to inserts having a central hole for clamping.

In German patent DE 39 02 532 a loading system is disclosed in which the inserts are stacked on top of each other on a central pin possibly with a spacer between. As a result the inserts will be only partially coated. This method is aimed for plasma CVD and will not be fully applicable to ordinary CVD since the inserts will be "glued" or grown together during an ordinary CVD-process.

The object of the present invention is to eliminate most of problems associated with the prior art loading systems.

The batch loading system according to the present invention consist of a peg attached to a carrier. As a result of this method of stacking cutting tool inserts in a CVD-reactor complete, even coating coverage with minimal contact marks are obtained.

Fig 1 shows an example of a peg according to the present invention in side view. The peg comprises a foot A and shoulders B and a neck C and a head D. The shoulders B have a cicular as well as non-circular cross-section such as square, triangular or rectangular but can also be in the form of wings. The foot A is preferably circular.

Figs 2 - 7 show various embodiments of the present invention. P is peg, X carrier, I_1 insert 1, I_2 insert 2, I_3 insert 3, I_4 insert 4 and F depression.

According to the invention inserts with a central hole for clamping, which generally is the case for inserts used for turning, is positioned on a peg P as shown in Fig 2. The insert rests on the peg shoulder B having such a shape that there is minimal contact between the peg and the insert and preferably so that contact occurs at only a few tiny points. This can be done by altering the shape of the shoulder (e.g. circular, rectangular, square or in the from of wings) depending upon the shape of the hole or the insert itself. Inside the hole H there is a wide passage around the neck to ensure even coating thickness of the inner walls of the hole. (The dimension of the hole H is important for a safe fixturing of the insert into its tool holder.) The function of the head D, which protrudes above the top surface of the insert I_1, is to serve as a support for the next carrier placed on top. In case the hole H is

straight the thicker head acts to prevent the inserts from tilting from their horizontal position and touch the upper and/or the lower carrier surfaces. In some types of inserts the hole is wider on the top surface of the insert and then a peg without a head can be used. The peg P is attached to the carrier X.

For inserts without a central hole a loading arrangement according to the invention is illustrated in Fig 3 for square inserts in which the pegs are placed between the inserts and generally supports at least two inserts. The peg shoulder shall have such a shape e.g. a sharp edge or tip that the contact area is minimised.

In one embodiment a peg similar to Fig 1 is used as shown in Fig 4 in which the peg supports an insert only at the middle of the edge. This arrangement is preferably used for single sided inserts.

In an alternative embodiment which can be used for positive inserts a peg as shown in Fig 5 is used. In this case the peg supports an insert essentially in the middle of each clearance face.

In yet an alternative embodiment for inserts with chipbreaker a peg as shown in Fig 6 is used. In this case the peg supports essentially in the bottom of the chipbreaker which has to deep enough so as to ensure maximum stability of the loading arrangement. Alternatively, plane inserts are provided with a depression between the corners to receive the shoulders of the pegs.

In the various embodiments above the pegs serve also as support for a following carrier. In case such support is provided in other ways the neck C and head D can be excluded. In such case an alternative embodiment according to Fig 7 can be used. In this case inserts are provided with a central hole (not shown) or depression F of a suitable depth and shape adapted to the peg.

These embodiments are given as examples only. Other embodiments are, of course, possible within the gist of the invention.

Pegs according to the invention are made of a refractory material such as ceramics, reinforced graphite, molybdenum preferably cemented carbide.

The carrier may be a woven metal net of e.g. an iron alloy with a suitable mesh size or a tray of graphite or other refractory material with mounting holes drilled for the pegs.

The peg foot is snapped into the metal net or pressed into the mounting holes in the tray. A desired number of pegs is mounted in each carrier in a regular pattern. The distance between the pegs as well as the height of the pegs is selected to give a desired free gas volume around each insert. A free volume around each insert of 1 - 5 mm is generally suitable. The carriers are piled on top of each other (preferably resting on the peg heads) to complete a full CVD load.

When using a tray carrier and a vertical gas flow, holes are suitably drilled in the trays in the areas between the pegs. The size and positioning of these holes can be optimized so that the gas flow can be controlled and directed in almost any desired way through the pile of trays.

When using horizontal or radial gas flows e g when employing the MTCVD (Moderate Temperature CVD)-technique the holes in the trays can optionally be omitted.

The loading system of the presently claimed invention allows the process gases to reach all essential surfaces of the inserts improving the coating thickness distribution, minimising discoloration due to irregular gas flow pattern and reducing coating time. The rigid and exact positioning of the inserts allows a safe transportation prior to and after the coating step and

also an automatic loading system. By using a suitable cross-section of the shoulders, the only contact between the peg and the insert will occur at only a few, less than five, tiny points which are not critical for the performance of the coated inserts.

In the foregoing description only very few specific details have been given by way of examples only. The reason hereto is that the exact conditions depend to a certain extent on the design of the equipment and the deposition conditions used. It is within the purview of the skilled artisan to adapt the method of the present invention with regard to the design and deposition conditions of his equipment.

Claims

1. Method of coating cutting tool inserts by CVD-methods with a completely covering coating during which coating step the inserts are resting on a support c h a r a c t e r i s e d in that said support is a peg attached to a carrier said peg comprising a foot A and shoulders B.

2. Method according to the preceding claim c h a r a c t e r i s e d in that said peg further comprises a neck C and a head D serving as support for another carrier placed on top of said carrier.

3. Method according to any of the preceding claims c h a r a c t e r i s e d in that said peg passes through a hole in an insert whereby the insert rests on the shoulders portion.

4. Method according to any of claims 1 and 2 c h a r a c t e r i s e d in that the pegs are placed between the inserts.

5. Method according to claim 4 c h a r a c t e r i s e d in that the insert rests on said shoulders in the bottom of a chipbreaker.

6. Method according to claim 4 c h a r a c t e r i s e d in that the insert rests on said shoulders essentially in the middle of a clearance face.

7. Method according to claim 4 c h a r a c t e r i s e d in that the insert rests on said shoulders in the middle of an edge.

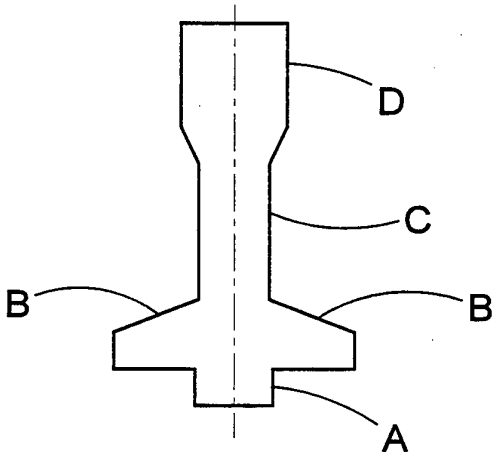

Fig.1

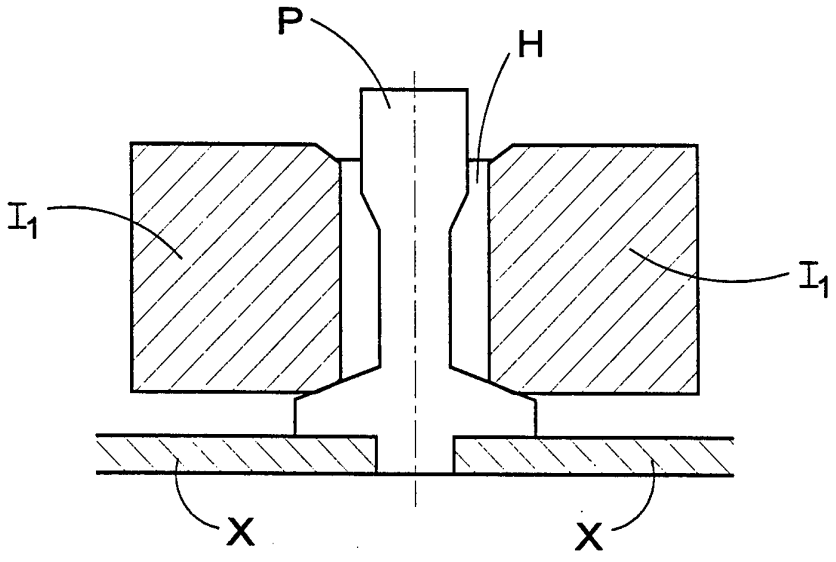

Fig. 2

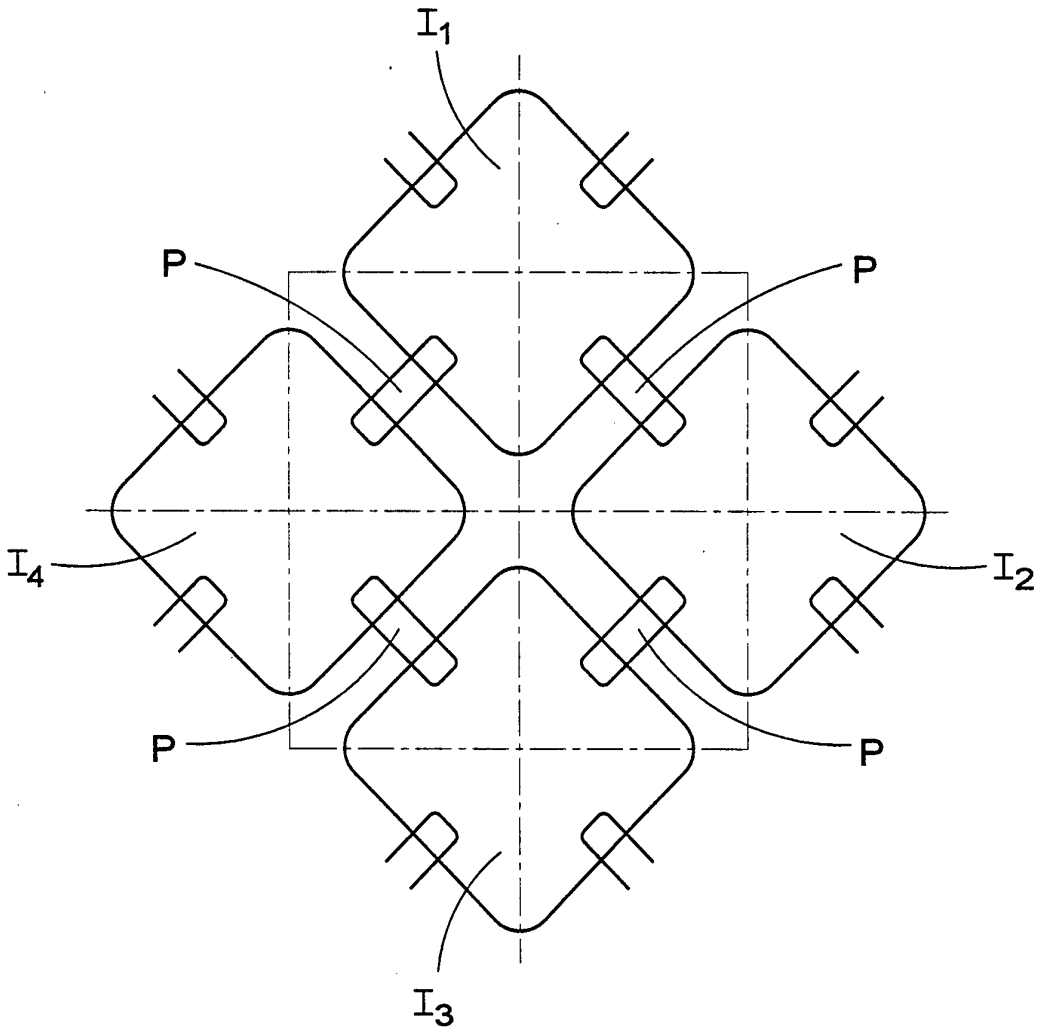

Fig. 3

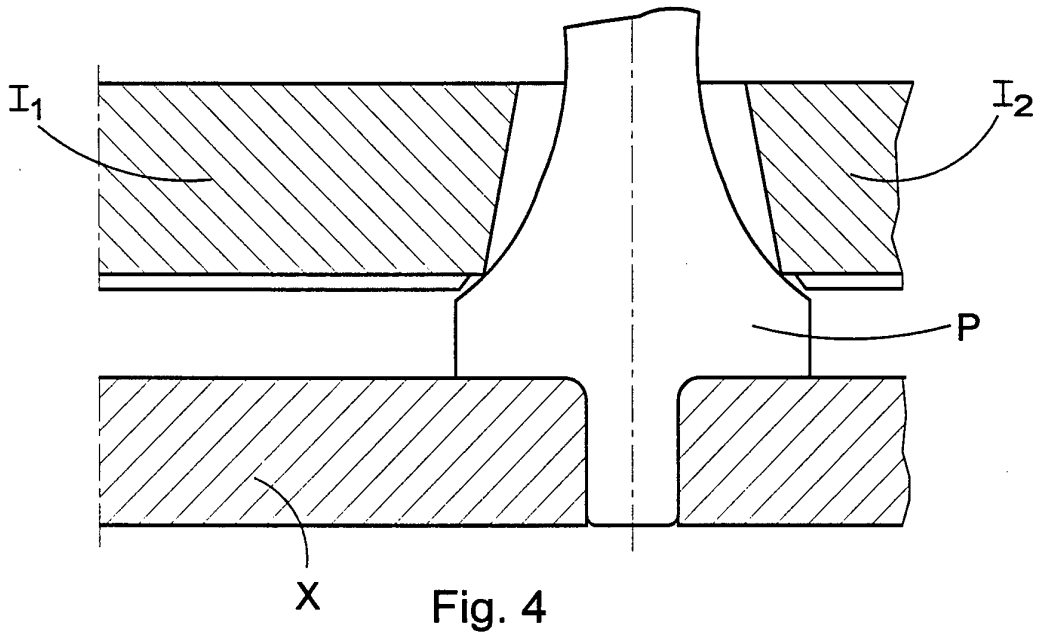

Fig. 4

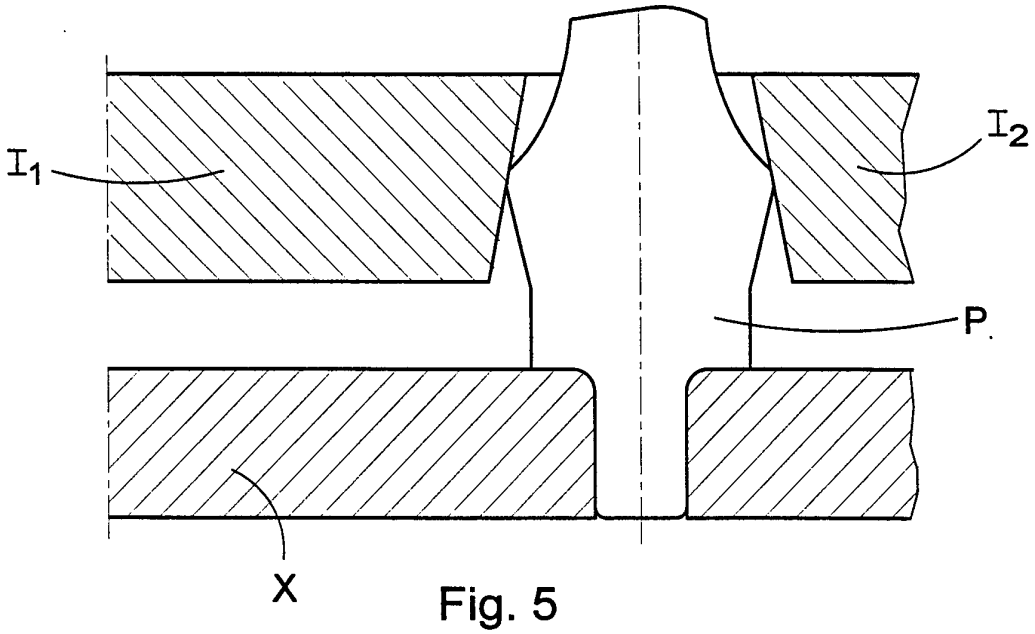

Fig. 5

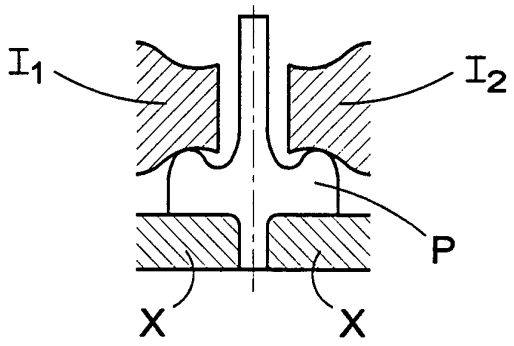

Fig. 6

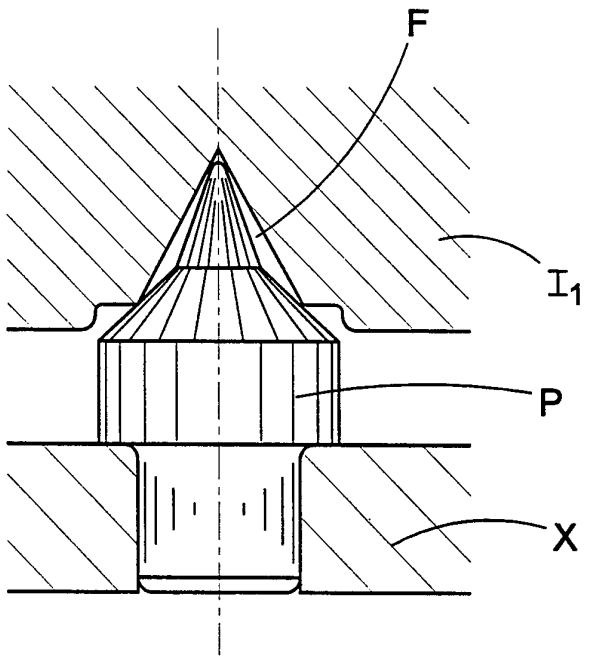

Fig. 7

INTERNATIONAL SEARCH REPORT

International application No.
PCT/SE 95/00276

A. CLASSIFICATION OF SUBJECT MATTER

IPC6: C23C 16/44, C23C 16/00
According to International Patent Classification (IPC) or to both national classification and IPC

B. FIELDS SEARCHED

Minimum documentation searched (classification system followed by classification symbols)

IPC6: C23C

Documentation searched other than minimum documentation to the extent that such documents are included in the fields searched

SE,DK,FI,NO classes as above

Electronic data base consulted during the international search (name of data base and, where practicable, search terms used)

EDOC

C. DOCUMENTS CONSIDERED TO BE RELEVANT

Category*	Citation of document, with indication, where appropriate, of the relevant passages	Relevant to claim No.
A	Patent Abstracts of Japan, Vol 12,No 242, C-510, abstract of JP, A, 63-33571 (NIPPON TELEGR / TELEPH CORP), 13 February 1988 (13.02.88) --	1-7
A	EP, A1, 0458342 (IDEMITSU PETROCHEMICAL COMPANY LIMITED), 27 November 1991 (27.11.91), figures 2,7, abstract --	1-7
A	EP, A1, 0551737 (AMERICAN TELEPHONE AND TELEGRAPH COMPANY), 21 July 1993 (21.07.93), column 3, line 16 - line 18, figures 1,2, claim 12, abstract --	1-7

☐ Further documents are listed in the continuation of Box C. ☒ See patent family annex.

* Special categories of cited documents:
"A" document defining the general state of the art which is not considered to be of particular relevance
"E" erlier document but published on or after the international filing date
"L" document which may throw doubts on priority claim(s) or which is cited to establish the publication date of another citation or other special reason (as specified)
"O" document referring to an oral disclosure, use, exhibition or other means
"P" document published prior to the international filing date but later than the priority date claimed
"T" later document published after the international filing date or priority date and not in conflict with the application but cited to understand the principle or theory underlying the invention
"X" document of particular relevance: the claimed invention cannot be considered novel or cannot be considered to involve an inventive step when the document is taken alone
"Y" document of particular relevance: the claimed invention cannot be considered to involve an inventive step when the document is combined with one or more other such documents, such combination being obvious to a person skilled in the art
"&" document member of the same patent family

Date of the actual completion of the international search	Date of mailing of the international search report
7 June 1995	27 -06- 1995
Name and mailing address of the ISA/ Swedish Patent Office Box 5055, S-102 42 STOCKHOLM Facsimile No. +46 8 666 02 86	Authorized officer Ingrid Grundfelt Telephone No. +46 8 782 25 00

INTERNATIONAL SEARCH REPORT

Information on patent family members

03/05/95

International application No.
PCT/SE 95/00276

Patent document cited in search report	Publication date	Patent family member(s)	Publication date
EP-A1- 0458342	27/11/91	JP-A- 4028873	31/01/92
		US-A- 5304249	19/04/94
		JP-A- 4191372	09/07/92
EP-A1- 0551737	21/07/93	JP-A- 6080487	22/03/94
		US-A- 5380551	10/01/95