E. J. SWEETLAND.

FILTER LEAF CONSTRUCTION.

APPLICATION FILED MAR. 7, 1916.

1,323,421.

Patented Dec. 2, 1919.

FIG. 1

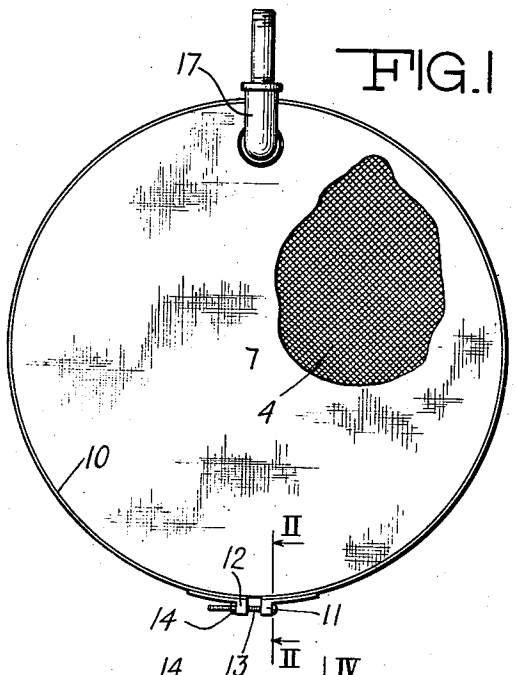

FIG. 2

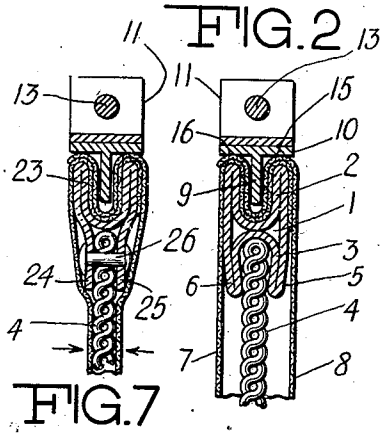

FIG. 7

FIG. 4

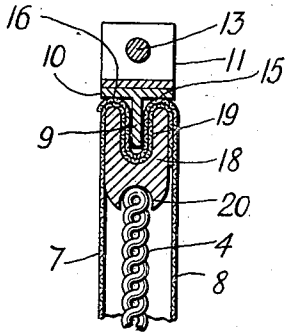

FIG. 3

FIG. 6

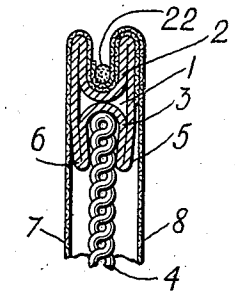

FIG. 5

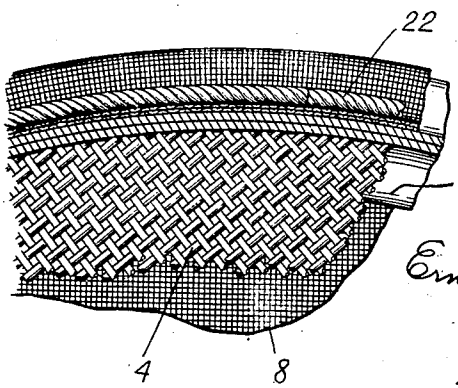

Ernest J. Sweetland INVENTOR.

BY

G. E. Terwilliger ATTORNEY

UNITED STATES PATENT OFFICE.

ERNEST J. SWEETLAND, OF MONTCLAIR, NEW JERSEY, ASSIGNOR, BY MESNE ASSIGNMENTS, TO UNITED FILTERS CORPORATION, A CORPORATION OF DELAWARE.

FILTER-LEAF CONSTRUCTION.

1,323,421. Specification of Letters Patent. Patented Dec. 2, 1919.

Application filed March 7, 1916. Serial No. 82,637.

To all whom it may concern:

Be it known that I, ERNEST J. SWEETLAND, a citizen of the United States, residing in the town of Montclair, in the county of Essex and State of New Jersey, have invented certain new and useful Improvements in Filter-Leaf Constructions, of which the following is a specification.

My invention relates to improvements in filter leaf devices, particularly that type of device in which the filter medium is cloth or similar fabric, usually mounted upon a frame, which holds it in position. In the prior devices of this general construction, such for instance as that shown and described in my United States Letters Patent No. 1,083,305 the frame may take the form of a ring within which is a central spacing member designed to afford a drainage area, and on each side of this spacing member a layer of cloth is provided to act as a filter medium. It is, of course, necessary in this type of filter that there shall be such a joint between the sections of cloth forming the filter medium that the sludge or residue from filtration will not find any interstices through which it may pass into the interior of the leaf.

As shown in my prior patent above referred to, it has been customary to sew the cloth in such a way as to accomplish this purpose, but this sewing operation is expensive and in many ways unsatisfactory, since from its nature, it is a permanent means of edging the sections of the filter cloth together, whereas there frequently arises a need for disassembling the parts of the filter leaf. When a sewn filter leaf is used, it is of course necessary to rip out the stitches in order to take the leaf apart.

One of the main objects of my present invention is to do away with the necessity of any stitching of the cloth or other fabric that forms the filter medium. This I accomplish by providing suitable clamping means preferably coöperating with interlocking devices on the filter frame, so that the sections of filter fabric may be detachably clamped in position without the need for any stitching whatever. My invention also contemplates certain other improvements in the construction of the filter leaf frame, drainage means and its associated parts as will more fully appear.

In the accompanying drawings, which form a part of the specification, Figure 1 is a front elevation of a filter leaf of a type designed to be used in connection with the type of filter shown in my Patent No. 1,083,305. Fig. 2 is an inverted fragmentary vertical sectional view on an enlarged scale on line 2—2 of Fig. 1. Fig. 3 is an enlarged central sectional view of a modified form of construction showing the clamping means in detail. Fig. 4 is a sectional view on line 4—4 of Fig. 3. Fig. 5 is a view similar to Fig. 3 showing a further modification of which Fig. 6 is a transverse sectional view. Fig. 7 is a transverse sectional view showing a further modification.

Referring to the drawings in detail, the numeral 1 designates a filter leaf frame, which may preferably be formed from a ring of tubing bent into the shape shown in Fig. 2 and having a peripheral channel 2 and a smaller channel 3 formed on its internal circumference. A disk 4 of any suitable spacing material, such as coarse screen, is centrally mounted within the ring and has its outer edge received within the channel 3. The legs of this channel are preferably crimped inward, as shown at 5 and 6, to clamp the spacing disk firmly in place. Over one face of this disk is spread a somewhat larger disk 7 of filter fabric, which has its outer edge or periphery folded over or looped into the peripheral channel 2, as clearly shown in Fig. 2. A second similar disk 8 of filter fabric covers the other face of the spacing disk and its edge is similarly looped into channel 2, being folded over the loop of the first disk. In order to retain the two sections of filter cloth in place some suitable clamping means, such as the vertical leg 9 of a T-section ring 10 is forced into the channel 2 over the two layers of cloth. The T member is preferably in the form of a hoop, as shown in Fig. 1, and any suitable means may be provided for forcing the leg 9 into the peripheral channel 2, such for instance, as the tension device 10 furnished by the lugs 11 and 12 and the bolt 13 connecting them, the lugs being secured to the flange of the T in any suitable way, as by brazing or soldering. It will be obvious that when the ring or hoop is placed in tension by screwing up the nut 13 on the bolt 14 not only will the leg 9 be forced into the channel 2, thus clamping the two looped edges of the cloth firmly in place, but the

flange of the T-ring will be forced down against the portions 15 and 16 of the cloth, which pass over the top edges of the channel. This construction insures a joint between the cloth and the ring frame that will obviate any possibility of the impurities in the fluid to be filtered passing into the interior drainage area afforded by the drainage disk 4. The usual drainage pipe 17 is provided for leading the clear filtrate to the outlet manifold.

Figs. 3 and 4 show a modification in which the tubular ring frame is supplanted by a solid ring 18 provided with the channels 19 and 20 for the receptacle respectively of the edges of the filter fabric and that of the drainage disk. Fig. 3 shows in detail the overlapping ends of the locking ring. As shown in this figure, the web or leg 9 is preferably continued beyond the flange 10 which ends at the lug 11. The web thus bridges the gap between the two lugs and the other end of the web is cut away at 21 for a sufficient distance to permit an adequate amount of adjustment of the bolt and nut which connect the lugs. This construction maintains the two abutting ends of the locking ring in alinement.

Figs. 5 and 6 show a further modification in which a cord or wire 22 is substituted for the locking ring above described. This cord, which may preferably be sash cord or the like is driven into the peripheral channel 2 after the cloth has been looped over it on both sides and will retain the cloth permanently in place. The outer ends of the channel 2 may preferably be forced together slightly either before or after the insertion of the cord, so as to aid in retaining it in place. After the cord is subjected to moisture, as it will be in the filter, it will tend to swell and this action will clamp the cloth all the more tightly against the inner walls of the channel.

In Fig. 7 I have shown a further modification in which the tubular frame is replaced by a pressed metal construction. In this form, there is a peripheral channel 23 corresponding to the channel 2, the metal being folded back upon itself to form the two inwardly extending flanges 24 and 25, between which the spacing disk 4 is received. The disk may merely be clamped between these two flanges by their own resiliency or may be riveted thereto at intervals by means of rivets 26. In this figure, the cloth is shown as clinging closely to the spacing disk. This is the position which the cloth actually assumes in the filter when it is in operation, since there is a liquid pressure acting in the direction of the arrows as the filtrate passes through the filter medium into the central drainage section of the leaf. Figs. 2, 4 and 6, on the other hand, show the cloth in the position which it will normally assume when the filter is not in operation.

It will be appreciated that, while I have used the general form of filter leaf shown in my Patent No. 1,083,305 for purposes of illustration, the features of my invention are applicable to many other types of filter construction. Furthermore, while I have illustrated and described only certain embodiments of my invention, I realize that it is susceptible of wide application, and I do not desire to be limited to the specific forms shown and described.

Having thus described my invention, I claim:—

1. In a filter leaf, a peripheral frame and an annular clamping ring surrounding the peripheral frame, one of said members being formed with a channel and the other of said members being formed with lateral portions adapted to engage the side walls of the channel and also a web adapted to enter the channel, in combination with a section of filter fabric having a portion thereof received within the channel.

2. In a filter leaf, a peripheral frame and an annular clamping ring surrounding the same, one of said members being formed with a channel and the other having a T-shaped cross section and arranged so that the central web thereof will enter the channel, in combination with a section of filter fabric having a portion thereof received within the channel.

3. In a filter leaf, a peripheral frame formed with a channel, filter fabric coverings having the edges thereof received within the channel, and an annular clamping ring extending around the peripheral frame and having portions which clamp the filter fabric within the channel and also at the edges thereof.

4. In a filter leaf, a frame having a channel therein, a section of filter fabric having a portion entering said channel and a T locking ring having its web entering said channel for clamping the fabric to the frame.

5. In a filter leaf, a frame having a channel therein, a section of filter fabric having a portion looped into said channel and a locking strip having a leg adapted to enter said channel to clamp the fabric therein and a flange adapted to clamp the fabric in place within the frame.

6. In a filter leaf, a frame having a double channel, a spacing member having its edge received in one of the channels, a section of filter fabric covering said member and having a portion received in the other channel and means for clamping said fabric in said channel.

7. In a filter leaf, a peripheral frame having an inner channel and an outer channel, a spacing member having its edge received in the inner channel, a section of filter fab-

ric entering said member and having a portion received in the outer channel and means for clamping said fabric in said channel.

8. In a filter leaf, a peripheral frame having an inner channel and an outer channel, a central spacing member having its edge received in the inner channel, a section of filter fabric covering one face of said member, a second section of filter fabric covering the other face of said member, each of said sections having a portion received in the outer channel and means for clamping said portion therein.

9. A peripheral frame for filter leaves and the like, comprising a tubular member having a depression in its outer edge to form a peripheral channel and a depression in its inner edge forming a similar channel facing in the opposite direction.

E. J. SWEETLAND.