PCT WORLD INTELLECTUAL PROPERTY ORGANIZATION
International Bureau

INTERNATIONAL APPLICATION PUBLISHED UNDER THE PATENT COOPERATION TREATY (PCT)

(51) International Patent Classification 6 :
H01L 29/15, 29/16, H01S 3/19, H01L 33/00, 31/0352, 39/12

A2

(11) International Publication Number: **WO 96/25767**

(43) International Publication Date: 22 August 1996 (22.08.96)

(21) International Application Number: PCT/US96/02052

(22) International Filing Date: 14 February 1996 (14.02.96)

(30) Priority Data:
08/393,380 17 February 1995 (17.02.95) US

(71) Applicant: PAINTER, B., A., III [US/US]; Lee Highway North, P.O. Box 477, Troutville, VA 24175 (US).

(72) Inventor: BROWN, Thomas, G.; 205 Doncaster Road, Rochester, NY 14623 (US).

(74) Agent: JARRELL, Brenda, H.; Choate, Hall & Stewart, Exchange Place, 53 State Street, Boston, MA 02109 (US).

(81) Designated States: AL, AM, AT, AU, AZ, BB, BG, BR, BY, CA, CH, CN, CZ, DE, DK, EE, ES, FI, GB, GE, HU, IS, JP, KE, KG, KP, KR, KZ, LK, LR, LS, LT, LU, LV, MD, MG, MK, MN, MW, MX, NO, NZ, PL, PT, RO, RU, SD, SE, SG, SI, SK, TJ, TM, TR, TT, UA, UG, UZ, VN, ARIPO patent (KE, LS, MW, SD, SZ, UG), Eurasian patent (AZ, BY, KG, KZ, RU, TJ, TM), European patent (AT, BE, CH, DE, DK, ES, FR, GB, GR, IE, IT, LU, MC, NL, PT, SE), OAPI patent (BF, BJ, CF, CG, CI, CM, GA, GN, ML, MR, NE, SN, TD, TG).

Published
Without international search report and to be republished upon receipt of that report.

(54) Title: PHONON RESONATOR AND METHOD FOR ITS PRODUCTION

(57) Abstract

A structure of periodically varying density is provided, that acts as a phonon resonator for phonons capable of participating in phonon-electron interactions. Specifically, a phonon resonator that is resonant for phonons of appropriate momentum to participate in indirect radiative transitions and/or inter zone intervalley scattering events is provided. Preferably, the structure is an isotope superlattice, most preferably of silicon. The structure of the present invention has improved optical, electrical, and/or heat transfer properties. A method of preparing the structure of the present invention is also provided.

FOR THE PURPOSES OF INFORMATION ONLY

Codes used to identify States party to the PCT on the front pages of pamphlets publishing international applications under the PCT.

AM	Armenia	**GB**	United Kingdom	**MW**	Malawi
AT	Austria	**GE**	Georgia	**MX**	Mexico
AU	Australia	**GN**	Guinea	**NE**	Niger
BB	Barbados	**GR**	Greece	**NL**	Netherlands
BE	Belgium	**HU**	Hungary	**NO**	Norway
BF	Burkina Faso	**IE**	Ireland	**NZ**	New Zealand
BG	Bulgaria	**IT**	Italy	**PL**	Poland
BJ	Benin	**JP**	Japan	**PT**	Portugal
BR	Brazil	**KE**	Kenya	**RO**	Romania
BY	Belarus	**KG**	Kyrgystan	**RU**	Russian Federation
CA	Canada	**KP**	Democratic People's Republic of Korea	**SD**	Sudan
CF	Central African Republic			**SE**	Sweden
CG	Congo	**KR**	Republic of Korea	**SG**	Singapore
CH	Switzerland	**KZ**	Kazakhstan	**SI**	Slovenia
CI	Côte d'Ivoire	**LI**	Liechtenstein	**SK**	Slovakia
CM	Cameroon	**LK**	Sri Lanka	**SN**	Senegal
CN	China	**LR**	Liberia	**SZ**	Swaziland
CS	Czechoslovakia	**LT**	Lithuania	**TD**	Chad
CZ	Czech Republic	**LU**	Luxembourg	**TG**	Togo
DE	Germany	**LV**	Latvia	**TJ**	Tajikistan
DK	Denmark	**MC**	Monaco	**TT**	Trinidad and Tobago
EE	Estonia	**MD**	Republic of Moldova	**UA**	Ukraine
ES	Spain	**MG**	Madagascar	**UG**	Uganda
FI	Finland	**ML**	Mali	**US**	United States of America
FR	France	**MN**	Mongolia	**UZ**	Uzbekistan
GA	Gabon	**MR**	Mauritania	**VN**	Viet Nam

PHONON RESONATOR AND METHOD FOR ITS PRODUCTION

Background of the Invention

Semiconducting materials have proven to be the cornerstone of the electronics revolution; and silicon, thanks to its purity, ease of fabrication, and high yield in manufacturing, has been the dominant material utilized in integrated circuit technology. With the constant pressure for faster, more efficient devices, there is much interest in developing or identifying new, low-cost materials that can meet the interconnect demands associated with increasing parallelism and higher data rates. Additionally, pressure to reduce device size and density has focused efforts on identifying materials with improved heat dissipation and/or electrical conductivity characteristics.

The use of superconducting materials, in combination with established semiconductor technologies, has been proposed as a solution to the heat dissipation problems encountered with present-day semiconducting materials. Specifically, it has been suggested that superconducting wires and junctions could be used in integrated circuits to reduce heat dissipation. Unfortunately, even recently-discovered "high temperature" superconductors do not operate above cryogenic temperatures. Moreover, the expense and engineering difficulty associated with integration of available superconducting and semiconducting technologies make this possibility impractical, if not infeasible.

Optical communication systems offer a potential solution to the interconnect problem, but development efforts have been hampered by the difficulties associated with integrating efficient light sources into available silicon circuits. Silicon itself, like the other members of its periodic-table family (group IV), has limited optical capabilities due to its centrosymmetric crystal structure and an indirect band gap, which prohibits photon emission via efficient, band-to-band radiative transmission (see below).

Much effort has been directed at circumventing the selection rules that forbid band-to-band radiative transmission in indirect bandgap semiconductors, in order to develop semiconducting materials with improved optical properties (Iyer et al. Science 260:40-46, 1993). One approach has been to introduce suitable impurities into the group IV lattice. Tight binding of an exciton (an electron-hole pair) to an impurity can provide efficient radiative transmissions if a sufficient volume of impurities has been introduced. The most successful of these efforts have involved isoelectronic complexes and the rare-earth dopant Erbium. However, Erbium, like other radiative impurity complexes, is difficult to introduce in a concentration sufficient to provide optical gain.

Efforts have also been directed at growing ordered alloys and superlattices, with the idea of using band gap engineering to "fold" the Brillouin zone and achieve a quasi direct-gap material (Presting et al. Semicond. Sci. Technol. 7:1127-1148, 1992). The most popular of these materials systems has been silicon-germanium, with some recent interest in the quaternary alloy carbon-silicon-germanium-tin. These materials have yet to show the radiative efficiency found in direct bandgap materials.

A widely studied (but poorly understood) mechanism for light emission occurs in silicon that has undergone an electrochemical etching process (Iyer et al. *supra*). The etch produces a porous structure with nanometer-size particles that, upon passivation, provides efficient, visible photoluminescence. Samples of etched silicon have also been excited in electroluminescence, and have attracted some interest for display devices.

In addition, LEDs have been fabricated using silicon carbide. However, it has not been possible to produce optical amplifiers (e.g. lasers) using indirect bandgap materials for a discussion of the underlying reasons.

Thus, there is a need for development of materials with improved optical, electronic, and/or heat dissipation properties. There is a particular need for

improved semiconductor materials. Preferably, the improved materials should be compatible with present-day electronic materials (e.g. silicon).

Summary of the Invention

The present invention provides an improved material in which optical, electronic, and/or heat dissipation characteristics are modified because certain electron-phonon interactions are enhanced or suppressed in the material. Specifically, the present invention provides an indirect bandgap material that functions as a resonator for phonons of desired wavenumbers. In some embodiments, the phonon resonator of the present invention displays increased photon emission or absorption capability relative to known indirect bandgap materials. In other embodiments, the present phonon resonator has enhanced electrical properties, such as electrical conductivity. The phonon resonator of the present invention can also show improved thermal conductivity characteristics, and can be incorporated into electronic devices to provide improved heat transfer. The present invention also provides an isotope superlattice that is a phonon resonator.

The phonon resonator of the present invention can be incorporated into any of a variety of different optical devices such as, for example, LEDs and lasers. The present phonon resonator can be utilized, for example, in optical communications, data storage, printing, uv-light emission, infrared lasers, etc.. Other embodiments of the phonon resonator of the present invention have enhanced electrical conductivity and can be utilized in electrical applications such as, for example, superconducting applications.

The present invention also provides methods of fabricating an isotope superlattice that is a phonon resonator.

In some embodiments, the phonon resonator of the present invention is a structure of substantially periodically varying density, which structure comprises at least one first region of a first density; and at least one second region of a second density, the first and second regions being adjacent one another and alternating in

the structure so that the structure has a substantially periodically varying density. The period of the structure is selected such that the structure is substantially resonant for phonons of appropriate wavevector to participate in electron-phonon interactions (e.g. phonons of appropriate wavevector to participate in radiative electronic transitions, phonons of appropriate wavevector to participate in interzone and/or intervalley scattering of conduction band electrons).

In other embodiments, the phonon resonator of the present invention is a structure having degenerate conduction band valleys and substantially periodic variations in material composition so that scattering of electrons between the degenerate conduction band valleys is enhanced relative to intervalley electron scattering in a structure that lacks the substantially periodic variations.

In some embodiments, the density or material composition of the structure varies periodically in more than one dimension; in other embodiments, each region comprises a layer, so that the density or material composition of the structure varies periodically in only one dimension.

In preferred embodiments of the present invention, the phonon resonator is a layered structure comprising an isotope superlattice in which each layer is enriched for one isotope of an element. Most preferably, the layers are enriched for different isotopes of the same element, preferably silicon. In some preferred embodiments of a silicon isotope superlattice of the present invention, the superlattice has a period that is an integer multiple of five atomic layers; in alternate preferred embodiments, the period is an integer multiple of ten atomic layers.

The phonon resonator of the present invention, in some embodiments, is also resonant for (directional or coherent) phonons that are generated by stimulated phonon emission, so that the resonator provides accelerated heat transfer. In some embodiments, the phonon resonator provides a stochastic phonon resonance.

The present invention also provides various devices incorporating a phonon resonator. The invention provides, among other things, a light-emitting device,

comprising a phonon resonator, a first electrode disposed on a first side of the structure; and a second electrode disposed on a second side of the structure, the second side being opposite the first side. At least one of the electrodes can be transparent if desired. The light-emitting device of the present invention can include a p-doped region and an n-doped region, and may function as a light-emitting diode (LED). The p- and n-doped regions of the light-emitting device of the present invention may have a higher bandgap than does the phonon resonator, so that electrons and holes are confined within the phonon resonator. The light-emitting device of the present invention preferably includes a dielectric waveguide, most preferably formed by the p-doped region and the n-doped region, each having a refractive index higher than that of the structure. In some embodiments, the light-emitting device of the present invention is a laser (e.g. a cleaved facet reflection, distributed feedback, and/or vertical cavity surface emitting).

The present invention also provides devices selected from the group consisting of light emitting devices, light emitting diodes, laser diodes, cleaved facet reflection lasers, distributed feedback lasers, vertical cavity surface emitting lasers, optical detectors, optical modulators, non-linear optical devices, electrical conductors, planar transformers, diodes, bipolar transistors, field-effect transistors, integrated circuits, SQUIDs, Josephson junctions, transducers, and microwave detectors, that are improved over conventional devices because they incorporate a phonon resonator that is substantially resonant for phonons of appropriate wavevector to participate in phonon-electron interactions.

The present invention also provides a method for producing a phonon resonator comprising the step of producing a structure of substantially periodically varying density comprising at least one first region or layer of a first density; and at least one region or second layer of a second density, the first and second regions or layers being adjacent one another and alternating in the structure so that the structure has a substantially periodically varying density, the period of the structure being selected such that the structure is substantially resonant for

phonons of appropriate wavevector to participate in electron-phonon interactions. In preferred embodiments, the method of the present invention involves producing an isotope superlattice by separating isotopes; and assembling the superlattice. According to the present invention, isotope separation is preferably performed by a method selected from the group consisting of distillation, extraction, centrifugation, diffusion, electrochemical methods, and electromagnetic methods; assembly of an isotope superlattice is preferably performed by a method selected from the group consisting of: chemical vapor deposition, molecular beam epitaxy, and chemical beam epitaxy. In some embodiments, the steps of separating and assembling are performed separately. In alternate embodiments, the steps of separating and assembling are performed simultaneously. In preferred embodiments, an isotope superlattice of the present invention is produced using laser-assisted chemical vapor deposition.

Description of the Preferred Embodiments

Drawings

Figure 1 is a schematic diagram of the energy bands in a solid.

Figure 2 is an energy vs. momentum diagram for a direct bandgap material.

Figure 3 is an energy vs. momentum diagram for an indirect bandgap material.

Figure 4 illustrates the three possible photon-electron interactions. Specifically, Figure 4A illustrates absorption of a photon by an electron that can occupy one of only two energy states; Figure 4B illustrates spontaneous emission of a photon by an electron that can occupy one of only two energy states; and Figure 4C illustrates stimulated emission of a photon by an electron that can occupy one of only two energy states.

Figure 5 is a schematic diagram of atoms arranged in a crystalline solid.

Figure 6 depicts phonon-assisted radiative transitions in an indirect bandgap material. Figure 6A illustrates spontaneous emission of a phonon as a result of an

electron-phonon interaction that stimulates photon emission; Figure 6B illustrates stimulated phonon absorption; and Figure 6C illustrates stimulated phonon emission.

Figure 7 is a schematic design of a distributed feedback laser.

Figure 8 is an energy vs. momentum diagram for silicon.

Figure 9 shows a schematic diagram of a portion of a silicon isotope superlattice of the present invention.

Figure 10 illustrates a light emitting device that utilizes a phonon resonator of the present invention.

Figure 11 presents four embodiments (as Figures 11A, 11B, 11C, and 11D) of a light-emitting device of the present invention.

Figure 12 depicts a light-emitting diode (LED) of the present invention.

Figure 13 depicts an LED of the present invention in which carrier confinement is achieved by means of a heterojunction.

Figure 14 depicts and edge-emitting LED of the present invention.

Figure 15 presents two embodiments (as Figures 15A and 15B) of a laser diode of the present invention. Figure 15A depicts a cleaved facet reflection laser. Figure 15B depicts a distributed feedback laser.

Figure 16 depicts a Vertical Cavity Surface Emitting Laser (VECSEL) of the present invention.

Figure 17 and 18 depict alternate embodiments of an optical photodetector incorporating a phonon resonator of the present invention.

Figure 19 depicts absorption and emission of a phonon by a conduction-band electron in a semiconductor material.

Figure 20 depicts coherent absorption and emission of a phonon by a conduction-band electron in a semiconductor material.

Figure 21 illustrates phonon-mediated exchange between two conduction-band electrons in a semiconductor solid.

Figure 22 illustrates phonon-mediated exchange between electrons in different, degenerate conduction band minima in a single conduction band of a semiconductor material.

Figure 23 presents a graph of the normalized electron pair potential as a function of the pair separation, measured in superlattice periods. For the calculation presented, the mean free path is 5 superlattice periods.

Figure 24 is a graph showing the reduction in electron pair binding energy that occurs with decreasing electron mean free path.

Figure 25 shows the electron pair binding energy as a function of the scattering potential for a fixed mean free path.

Figure 26 depicts intervalley scattering of electrons in conduction band minima of neighboring Brillouin zones.

Figure 27 shows a low-resistance electrical conductor of the present invention.

Figure 28 depicts an electrical diode of the present invention.

Figure 29 depicts a bipolar transistor of the present invention.

Figure 30 depicts an n-type Junction Field Effect Transistor (JFET) of the present invention.

Figure 31 depicts a Metal Oxide Semiconductor Field Effect Transistor (MOSFET) of the present invention.

Figure 32 depicts an integrated circuit of the present invention.

Figure 33 depicts a laser-assisted chemical vapor deposition method according to the present invention.

Phonon Resonator

The present invention is directed to a phonon resonator. In particular, the invention provides a phonon resonator of an indirect bandgap material, which phonon resonator is designed so that certain electronic, optical, and/or heat transfer properties of the material are enhanced.

A phonon can be thought of as the minimum unit of vibrational energy allowed in accordance with principles of quantum mechanics. A phonon resonator is a structure that functions as a resonator for those vibrational excitations that behave as quantum mechanical vibrational wavepackets. By analogy with optical resonators, a vibrational resonator requires coherent confinement, or feedback, of vibrational energy.

It is possible to construct an electromagnetic resonator (that is, a structure that is resonant for electromagnetic waves) by producing a structure having a periodic variation in the material impedance. Similarly, a vibrational resonator can be produced by creating a structure having a periodic variation in material density, since material density determines the impedance of a vibrational wave.

One aspect of the present invention involves the recognition that a vibrational resonator can be constructed to be resonant with certain phonon-electron interactions, so that the resonator provides a resonant enhancement of the phonons necessary for those interactions. Although phonon resonators have previously been described previously (see, for example, Klein IEEE J. of Quant. Elec. QE-22:1760-1779, 1986), the present invention describes for the first time a phonon resonator that provides resonant enhancement of phonon-electron interactions, with resulting improvement in optical, electronic, and/or heat transfer properties in the material from which the resonator is constructed. Additionally, the present invention provides the first example of a phonon resonator having a coupling length that is shorter than the phonon mean free path.

Below, we discuss the structural characteristics of the phonon resonator of the present invention, and the ways in which the phonon resonator affects the optical, electronic, and/or heat transfer properties of the material from which the resonator is constructed.

Enhancement of Optical Properties

The present invention encompasses indirect bandgap materials having enhanced optical properties. In order that certain aspects and advantages of the present invention will be more readily appreciated, we begin with a discussion of the properties of indirect bandgap semiconductor materials, as opposed to direct bandgap materials.

First of all, we point out that, in any semiconductor solid (i.e. whether a direct or indirect bandgap material) that is free of defects and impurities, electrons can acquire only particular energy values that are within two discrete bands: a "valence band", which encompasses the range of energies possessed by electrons in bound energy states; and a "conduction band", which corresponds to the allowable energy states of free electrons or electrons that are unbound and move about the crystal lattice of the solid. Figure 1 presents a schematic representation of a valence band **10** and a conduction band **20**, separated by an "energy bandgap" **30** that corresponds to the range of impermissible energies between the valence **10** and conduction **20** bands.

For any given semiconductor solid, most of the energy states within the valence band are occupied by electrons, while most of the energy states within the conduction band are unoccupied. If, however, an electron in the valence band can acquire energy in excess of the energy of the bandgap, that valence band electron can occupy an energy state within the conduction band. When such a valence band electron is excited into the conduction band, that electron leaves behind a vacant energy state in the valence band. The vacant energy state is termed a "hole", and may be considered as a particle having a positive charge equal in magnitude to the electron.

Electrons in the conduction band typically occupy states near the conduction band minimum. Holes are generally present at the valence band maximum. Under certain circumstances, these electrons and holes can recombine, resulting in

the emission of a photon, otherwise known as a "radiative transition." To obtain a radiative transition, both energy and momentum must be conserved.

Radiative transitions are allowed in direct bandgap materials. In fact, the term "direct bandgap" refers to the fact that the conduction band minimum and valence band maximum are aligned in these materials along the same momentum value. This fact is illustrated in Figure 2, which presents a graph of the energy (E) versus momentum (k) relationship of an electron in a direct bandgap solid. The region **37** of the graph in Figure 2 between curves E_c and E_v designates impermissible energy and momentum values for electrons in the solid. Curve E_c (the conduction band edge) designates permissible energy and momentum values for electrons in the conduction band, and curve E_v (the valence band edge) designates permissible energy and momentum values for electrons in the valence band. The energy difference between the conduction band minimum **22** of curve E_c and valence band maximum **12** of curve E_v is the energy bandgap **31**.

The alignment of conduction band minimum and valence band maximum in direct bandgap materials allows radiative transitions because an electron **40** has the same momentum value both before (i.e. in the conduction band) and after (i.e. in the valence band) the transition (i.e. before and after recombination with hole **50**). Thus, the conservation of momentum requirement for radiative transitions is satisfied. Similarly, the energy conservation requirement is satisfied because a photon **60** is emitted that has an energy equal to the energy lost by the electron as it recombines with the hole. The momentum of the photon **60** is so small compared to that of the electron **40** that, as mentioned above, the electron's momentum is effectively unchanged by the transmission.

By contrast, the valence band minimum and conduction band maximum are not aligned in indirect bandgap materials. In fact, the term "indirect bandgap" refers to the fact that these points are displaced relative to one another along a momentum axis. An energy band diagram for an indirect bandgap material is presented in Figure 3. Reference numeral **15** identifies the valence band

maximum in Figure 3, and reference numeral **25** identifies the conduction band minimum.

Radiative transitions are effectively forbidden for indirect bandgap materials because, as noted above, photons are only emitted when an electron in the conduction band recombines with a hole in the valence band, and energy and momentum are conserved. Because the valence band maximum **15** and conduction band minimum **25** are displaced relative to one another in indirect bandgap materials, an electron located near the conduction band minimum **25** cannot recombine with a hole near the valence band maximum **15** without violating the conservation of momentum requirement (recall that the emitted photon has insignificant momentum).

The conservation of momentum requirement would be satisfied for recombination events between either i) an electron having an energy and momentum corresponding to point A along the conduction band E_c shown in Figure 3 and a hole located near the valence band maximum **15**, or ii) an electron occupying an energy state near the conduction band minimum **25** and a hole located at point B. However, it is very unlikely that an electron would exist at point A for any significant amount of time because any electron excited to that position would quickly undergo an intraband transition to the conduction band minimum **25**. Similarly, a hole is unlikely to exist at position B because electrons occupy practically all of the states in the valence band about point B and vacant states or holes available for radiative transitions are principally located near the valence band maximum **15**.

The lack of efficient recombination between electrons and holes in indirect bandgap materials has limited their usefulness in optical applications. Quite simply, optical devices require optical transitions, and optical transitions are inefficient in indirect bandgap materials. The problem is particularly acute for optical devices that employ optical amplifiers (e.g. lasers), which require "stimulated emission" of photons.

Figure 4 illustrates the three possible photon-electron interactions that can occur in semiconductor materials: "absorption" (Figure 4A), "spontaneous emission" (Figure 4B), and "stimulated emission" (Figure 4C). In stimulated photon emission, an incident photon **61**, having an energy equal to the energy difference between a high energy state E_2 and a low energy state E_1, stimulates an electron **40** in the high energy state to return to the low energy state, releasing its energy in the form of a second photon **63** that is equal in energy and phase with the incident photon **61**.

The effectiveness of an optical amplifier is related to its "optical gain", which is proportional to $e^{(gz)}$, where z is the distance along which an input signal propagates and g, the gain per unit length, is proportional to R_{stim}-R_{abs}. R_{stim} is the rate at which photons are emitted by stimulated emission and R_{abs} is the rate at which photons are absorbed. Thus, high optical gain requires that stimulated photon emission (Figure 4C) exceed absorption (Figure 4A).

In order for stimulated photon emission to exceed photon absorption, a specified number of electrons must be excited into a high energy state from a low energy state, a phenomenon known as "population inversion". For atomic or molecular transitions, a population inversion occurs when the following condition is satisfied:

$$N_2 > (B_{12}/B_{21})N_1,$$

where N_2 is the number of electrons in the high energy state E_2; N_1 is the number of electrons in the low energy state E_1; B_{12} is a coefficient proportional to the rate at which photons are absorbed; and B_{21} is a coefficient proportional to the rate at which photons are generated by stimulated emission.

There is a similar requirement for band-to-band transitions in semiconductors. If the population within each band has reached a quasi-equilibrium distribution, there is a characteristic fermi energy, termed "ϵ_{fV}" for the valence band and "ϵ_{fC}" for the conduction band. A population inversion is achieved for photon energies satisfying the relationship:

$$Eg < h\nu < \epsilon_{fC} - \epsilon_{fV}.$$

Thus, the "quasi-Fermi energy", or intraband chemical potential, gauges the population distribution in each band.

In a semiconductor laser, a population inversion can be created by generating electron-hole pairs (i.e. by exciting electrons into the conduction band and thereby creating holes in the valence band). For direct bandgap materials, such an increase in excited electron and hole density results in increased stimulated photon emission. For indirect bandgap materials, however, the inability of the excited electrons to readily recombine with holes limits the extent to which increased exciton population (i.e. increased electron-hole density) leads to increased stimulated emission. Moreover, as more electrons are excited into the conduction band, the so-called "free carrier absorption" also increases such that increased numbers of photons are absorbed by the electrons in the conduction band. Thus, even when a population inversion is present, stimulated emission typically does not exceed absorption in indirect bandgap materials.

As we have seen, both spontaneous and stimulated radiative transitions are effectively forbidden in indirect bandgap materials because an electron located near the conduction band minimum of an indirect bandgap material cannot recombine with a hole near the valence band maximum without violating the conservation of momentum requirement. This problem can be overcome if the momentum necessary to allow a radiative transition can be provided by crystal lattice vibrations, or phonons.

As shown in Figure 5, atoms in a crystal lattice can be modelled, qualitatively, as balls **70** attached to one another by springs **75**. Following the analogy, phonons correspond to the (quantized) vibrational motions of such balls propagating through the crystal as a wave. The interaction of a phonon with an electron in the conduction band can provide the necessary momentum to allow an "indirect", or "phonon-assisted", transition of the electron into a hole in the valence band, resulting in emission of a photon.

Figure 6 illustrates three different mechanisms for phonon-assisted radiative transitions in an indirect bandgap material. The reference numbers in Figure 6 are analogous to those in Figure 4, so that **81** in Figure 6 represents an incident phonon, and **83** represents an emitted phonon. Figure 6A depicts a phonon-assisted radiative transition involving spontaneous emission of a phonon **83**. Figure 6B shows a mechanism involving stimulated phonon absorption; and Figure 6C depicts a mechanism involving stimulated phonon emission. As noted above, both momentum and energy must be conserved in a radiative transition. In each type of phonon-assisted radiative transition depicted in Figure 6, the phonon provides the requisite change in momentum, (k_2-k_1), so momentum is conserved during recombination of an electron in the conduction band minimum with a hole in the valence band maximum. Consequently, a photon having an energy approximately equal to the bandgap is emitted. Specifically, the emitted photon has an energy, E_p, that is equal to the bandgap minus (for those mechanisms involving phonon emission) or plus (for mechanisms involving phonon absorption) the phonon energy, Θ. That is:

$$E_p = E_q \pm \Theta.$$

Note that only phonons having the specified momentum (k_2-k_1) can assist in the radiative transition.

Unfortunately, radiative, phonon-assisted transitions are rare in conventional semiconductor structures. Furthermore, electrons in indirect bandgap materials tend to recombine with defects or impurities (traps) in the crystal before recombining with a hole in the valence band. Such electron-trap recombination events are non-radiative and generate heat instead of photons. These problems have hampered researchers' abilities to incorporate indirect bandgap materials into optical devices.

How can phonon-electron interactions be enhanced in indirect bandgap materials? One way is to simply increase the number of available phonons. The idea behind the present invention is that a "phonon resonator" can be produced by

making structure of periodically varying density, in which the vibrational energy (i.e. the phonon density) at the momentum necessary to produce an indirect optical transition is enhanced. Since, even at high frequencies, phonons are vibrational waves of masses (atoms) in a medium, changes in the mass density of the medium through which the phonons propagate can be used to increase the density of phonons of a desired momentum and energy, while diminishing those of other momenta and energies. Although the general concept of a phonon resonator is not new (see, for example, Klein IEEE J. of Quant. Elec. QE-22:1760-1779, 1986; it has not previously been appreciated that a phonon resonator could or should be designed to be resonant for phonons of appropriate wavevector to participate in phonon-electron interactions.

When a phonon resonator according to the invention is produced, radiative recombination events involving phonon absorption are enhanced in proportion to the ratio of the phonon density in the structure to the phonon density in a disordered (i.e. not having a periodically varying density) structure of the same material. A phonon resonator will achieve a high probability of indirect optical transitions if it is resonant for phonons of the appropriate momentum to participate in any of the recombination events depicted in Figure 6 (i.e. in recombination events involving spontaneous emission of a phonon, stimulated phonon absorption, and/or stimulated phonon emission).

As is known in the art, the probability of spontaneous emission is locally modified in a resonator. Typically, some locations in a resonator have a very high probability of spontaneous emission, while other locations have comparatively low probabilities. Thus, by providing a phonon resonator, the present invention provides a material in which spontaneous phonon emission is enhanced. A resonator can also affect which energy and momenta are likely to attract spontaneously emitted phonons.

If there is a high rate of phonon generation in a resonator, both stimulated phonon absorption and stimulated phonon emission can be enhanced. In some

instances, the resonator may be able to support a nonequilibrium phonon population that maintains itself through stimulated phonon emission. This is achieved when the phonon generation rate is equal to the scattering loss for the structure.

As mentioned above, the energy of the photon emitted in phonon-assisted radiative transitions has the value $E_p = E_q + \Theta$ when the photon is produced by a mechanism involving phonon absorption, and has the value $E_p = E_q - \Theta$ when the photon is produced by a mechanism involving phonon emission. Photons produced by a mechanism involving phonon absorption therefore have an energy greater than the bandgap energy. Such photons can readily be re-absorbed by the structure. On the other hand, photons produced by a mechanism involving phonon emission have an energy less than that of the bandgap and cannot readily be reabsorbed by the structure. Thus, optical gain is more readily achieved in a phonon resonator in which photon emission occurs through a process involving phonon emission rather than phonon absorption. For recombination events involving phonon emission, the enhancement of radiative transitions in a phonon resonator is equal to the number of phonons per vibrational mode of the resonator.

In accordance with a preferred embodiment of the present invention, a structure is created having alternating layers of relatively high mass density and relatively low mass density. The layered structure is resonant for phonons having a wavelength such that an integral number of half-wavelengths fits into the lattice period; phonons having other wavelengths propagate through the structure without any resonant reflection. One consequence of a strong resonance is an increase in the stored energy (i.e. phonon density) at the center of the structure. The period, Λ_L, of the layered structure of the present invention is chosen to provide a resonant Bragg reflection for phonons having the momentum necessary to participate in indirect transitions.

The layered structure of the present invention can be thought of as analogous to a distributed feedback laser. As shown in Figure 7, a distributed feedback laser

includes alternating layers of first 73 and second 77 materials having first and second indices of refraction. As light propagates through this layered medium (e.g. from left to right in Figure 7), small reflections are generated at each interface ($i_1 \ldots i_n$ in Figure 7). If each reflected wave is in phase, it reinforces the others so that the total net reflection is high and a resonance (e.g. a Bragg resonance) occurs. Also, the propagation of light through the material results in stimulated emission of additional photons that also propagate through the material and can be reflected at the layer interfaces. As discussed above, "lasing" occurs when stimulated emission exceeds absorption in the material. A distributed feedback laser will continue to lase as long as electrons are continually pumped into excited energy states.

The layered structure of the present invention operates in a similar fashion to the distributed feedback laser except that, instead of photons, it is phonons having the desired momentum that propagate through the material. The layered structure will only function as an effective resonator if the phonon mean free path is sufficiently long that the phonon scatters very little while passing through the structure. The mean free path of the phonon will be sufficiently long if the coupling coefficient, κ_p, between the incident and reflected phonons is greater than the inverse phonon scattering length, α_p. That is, the following must be true:

$$\alpha_p << \kappa_p \approx (\pi/\lambda_p)(\Delta M/M),$$

where λ_p is the phonon wavelength, ΔM is the modulation of the atomic mass, and M is the average atomic mass. If this relationship does not hold, phonons scatter before Bragg reflection can occur.

The layered structure of the present invention may be realized in a crystalline solid, for example by alternating thin, isotopically-enriched layers--i.e. by making an "isotope superlattice." An "isotopically enriched" layer, as defined herein, is a layer having a concentration of an isotope which is greater than the concentration of the isotope found naturally. For example, in its naturally occurring form, silicon is primarily composed of three isotopes in the following

compositions, 92.2% Si^{28}, 4.7% Si^{29} and 3.1% Si^{30}. In accordance with the present invention, an isotopically-enriched layer of Si^{28} is a layer that contains the isotope Si^{28} in a concentration more than 92.2% of the atoms of that layer. Similarly, isotopically enriched layers of Si^{29} and Si^{30} are layers that have atomic concentrations of these isotopes that exceed 4.7% and 3.1%, respectively.

Isotope superlattices are known in the art (see, for example, Berezin Solid State Comm. 65:819-821, 1988; Berezin J. Phys. C. 20:L219-L221, 1987; Fuchs Sup. and Microstruct. 13: 447-458, 1993; Haller GADEST, '93). However, it has not previously been recognized that isotope superlattices can be engineered to be phonon resonators that are resonant for phonons of appropriate wavevector to participate in phonon-electron interactions. Generally speaking, in an isotope superlattice of the present invention, the larger the difference in mass density within the structure, the better the resonance. An isotope superlattice having alternating thin layers of Si^{28} and Si^{29} achieves a little over 3% modulation of mass density. Alternating Si^{28} with Si^{30} layers provides over 6% modulation.

As mentioned above, a layered structure of the present invention is resonant when an integral number, m, of half-wavelengths fits into the lattice period, that is, when $\Lambda_L = m(\lambda_p/2)$. Crystalline silicon exhibits an indirect bandgap, as shown in Figure 8, in which the conduction band minimum is sixfold degenerate along the (100) direction, and occurs at approximately eight-tenths of the distance to the zone edge. Thus, the period, Λ_L, of the silicon isotope superlattice of the present invention is chosen for Bragg-resonant phonons of wavenumber $2\pi/\lambda_p = 0.8\pi/a$, where a is the lattice constant. For silicon, a is 4 atomic layers. The period of a silicon isotope superlattice of the present invention therefore follows the relationship:

$$\Lambda_L = 5m \text{ atomic layers.}$$

Thus, for example, superlattices of the form $Si^{28}{}_nSi^{30}{}_{5m-n}$, for $n \neq 0$, will provide a resonance for phonons capable of participating in an indirect transition. For m=1, the case that provides the lowest order Bragg reflection, this yields a

period of about 1.25 lattice constants, or, in the case of silicon, 5 atomic layers. Any silicon isotope superlattice having a period that is an integer multiple of 5 atomic layers will satisfy the Bragg resonance condition, using higher order scattering. Figure 9 shows a schematic representation of a portion of a silicon isotope superlattice of the present invention.

The increased phonon density associated with an isotope superlattice of the present invention may serve to increase the exciton stability. In material that is not enriched, there is a fixed relation between the number of free electrons and the number of electrons bound to holes in an exciton ("exciton population"). Free electrons have a lifetime (the time required for an electron to recombine nonradiatively with a trap) on the order of one microsecond or less, while excitonic electrons have radiative lifetimes much longer than one microsecond. When the radiative transition rate is increased in accordance with the present invention, the exciton radiative lifetime is reduced. Accordingly, fewer conduction electrons exist as free electrons, and more electrons are available for exciton formation.

When the exciton radiative lifetime is decreased, room temperature excitonic interactions can occur in indirect bandgap materials, such as silicon. The free exciton binding energy in materials such as silicon is 14.7 meV, much larger than that observed in direct-gap materials such as GaAs. Despite this fact, excitons do not exist in silicon at room temperature. The primary reason for this is that, in silicon, the rate of radiative transitions is much lower than the rate of nonradiative band-to-band recombination processes. Thus, an increase in radiative transitions, as provided by a phonon resonator of the present invention, will result in stable excitons at much higher temperatures. These stable excitonic interactions can provide the basis for light emission, absorption, modulation, and nonlinear optical properties in such indirect bandgap materials. For example, the photon absorption of an exciton can change in the presence of an electric field (Stark effect).

Therefore, in accordance with the present invention, an optical modulator based on the Stark effect can be made of indirect bandgap materials.

The following Examples describe various optical devices that incorporate a phonon resonator of the present invention.

EXAMPLE 1: Light-emitting device

A phonon resonator of the present invention may be incorporated into a light-emitting device, as depicted in Figure 10. In Figure 10, the phonon resonator **100** is positioned between electrodes **110** and **120**. Electrodes **110** and **120** may comprise semiconductor materials or conductor materials. These electrodes **110** and **120** serve to facilitate formation of a population inversion in the phonon resonator **100** by injection and/or confinement of carriers (i.e. electrons or holes) in this region.

In preferred embodiments of the light-emitting device of the present invention, the phonon resonator **100** is an isotope superlattice. For example, Figure 11 presents four embodiments of a light-emitting device of the present invention in which an isotope superlattice **86** is positioned between electrodes **110** and **120**. In Figure 11A, the device structure includes an electrode layer **120** formed on a substrate **130**. The isotope superlattice **86** consists of alternating isotopically-enriched layers **86A** and **86B** and is disposed on electrode **120**. Second electrode **110** is formed on isotope superlattice **86**.

As seen in Figure 11B, electrodes **110** and **120** may be disposed laterally on opposite sides of isotope superlattice **86**. Also, as would be apparent to one of ordinary skill in the art, a light-emitting device of the present invention may be constructed to be an edge-emitter (see Figure 11C), or a surface emitter (see Figure 11D). As shown in Figure 11D, the device will be a surface emitter if one electrode **110** is transparent.

Where the phonon resonator utilized in the light-emitting device of Figure 10 or Figure 11 is a silicon isotope superlattice, the thickness, t, of the isotope

superlattice **86** should be adequate to allow vibrational wave coupling. Preferably, $t >> 1/\kappa_p$, where κ_p is the coupling coefficient (see above). As given above,

$$\kappa_p \approx (\pi/\lambda_p)(\Delta M/M),$$

where λ_p is the phonon wavelength, ΔM is the modulation of the atomic mass, and M is the average atomic mass. As mentioned above,

$$\Lambda_L = m(\lambda_p/2).$$

Thus,

$$t >> (2\Lambda_L/m\pi)(M/\Delta M).$$

The number, N, of superlattice periods is equal to the thickness divided by the lattice period, i.e. $N = t/\Lambda_L$. The following relationship therefore holds for preferred silicon isotope superlattices of the present invention:

$$N >> (2/\pi)(M/\Delta M)(1/m)$$

For an isotope superlattice of Si^{28} and Si^{30}, $(\Delta M/M) = 0.06$. Thus, for first order coupling ($m = 1$), the number of Si^{28}/Si^{30} superlattice periods should preferably be greater than approximately 10, which corresponds to greater than approximately 50 atomic layers. Such an Si^{28}/Si^{30} superlattice is greater than approximately 100 Å thick.

Such light-emitting devices incorporating a phonon resonator of the present invention include light-emitting diodes and diode lasers (both Fabry-Perot and distributed feedback; see below). Light emitting devices of the present invention can be utilized alone, incorporated into other devices, or, for example assembled into an array used as a display. The present invention therefore encompasses a wide array of light emitting devices and/or systems, including any device or system in which at least one component incorporates a phonon resonator of the present invention.

EXAMPLE 2: Light-emitting diode

A light-emitting diode (LED) incorporating a phonon resonator of the present invention can be produced by equipping a generic light-emitting device

such as that described in Example 1 above with a p-n junction, as is known in the art, for efficient injection of electrons and holes. Figure 12 depicts a simple embodiment of such an LED.

As seen in Figure 12, an LED according to a preferred embodiment of the present invention constitutes a diode having an isotope superlattice **86** at the p-n junction. An n-type electrode layer **84** of single crystal silicon is grown on a substrate. An isotope superlattice **86** is then preferably grown on n-type layer **84**. The isotope superlattice may contain, for example, ten alternating isotopically enriched layers, for example of Si^{28} and Si^{30}. A p-type electrode layer **82** comprising single crystal silicon is then formed on isotope superlattice **86**. As is known in the art, doping can, in principle, be accomplished either by ion implantation or by epitaxial growth. Also, the n-type **84** and p-type **82** layers may be doped regions of the isotope superlattice **86**, or may alternately be constructed from different materials (e.g. bulk silicon). Where the layers are doped regions, doping may be accomplished by any method available in the art, including, for example, diffusion, incorporation during growth, ion implantation, or neutron transmutation doping (see, for example, Haller Semicond. Sci. Tech. 5:319, 1990, incorporated herein by reference).

Preferably, the isotope superlattice is as thick as the depletion layer that would otherwise be formed between the p-type layer **82** and n-type layer **84**. Electrons and holes can be injected into isotope superlattice layer **86** by applying a positive voltage to p-type layer **82** relative to the voltage applied to n-type region **84**, thereby forward biasing the semiconductor laser diode. Photons **63** may then be emitted from the LED as shown in Figure 12, which depicts a surface-emitting device.

The main technical requirement for overall efficiency in an LED such as that depicted in Figure 12 is a high radiative quantum efficiency (the average number of photons emitted per electron-hole pair injected). In preferred embodiments of the LED of the present invention, high radiative quantum efficiency is achieved by

providing a structure in which electrons and holes are confined in the same region. As is known in the art, this can be achieved by a heterojunction.

Figure 13 presents a depiction of an LED of the present invention utilizing a heterojunction. As depicted in Figure 13, p and n layers **82** and **84** are substituted with p and n layers **92** and **94**, respectively, that have a larger bandgap than that of the material in the isotope superlattice **86**. For example, layers of SiGeC alloy can be utilized with a silicon isotope superlattice. Electrons and holes are confined within the isotope superlattice.

Figure 14 provides another embodiment of an LED of the present invention. Specifically, Figure 14 presents an edge-emitting LED that includes a dielectric waveguide **95** to provide optical as well as carrier confinement. As depicted in Figure 14, a substrate **114** and a cover **112**, each having refractive indexes, n_s and n_c respectively that are less than the refractive index, n_f, of the phonon resonator **100**, are positioned on opposite sides of the phonon resonator **100**. In preferred embodiments, the phonon resonator **100** comprises an isotope superlattice, preferably of silicon. As would be apparent to one of ordinary skill in the art, it is often possible to select materials for the cover **112** and substrate **114** that have both a lower refractive index and a higher band gap than does the phonon resonator **100**, so that the resultant LED has both a waveguide and a heterojunction.

EXAMPLE 3: Laser diode

A phonon resonator of the present invention may be employed in a laser diode. In addition to requiring carrier and optical confinement (see above), a laser requires feedback. Feedback is accomplished by reflection, distributed feedback, or a combination of the two.

Figure 15A depicts a cleaved facet reflection laser, also known as a Fabry-Perot laser, of the present invention. The cleaved facet reflection laser depicted in Figure 15A constitutes a diode having a phonon resonator **100**, such as an isotope

superlattice, at the p-n junction (see above for description). The laser further includes two facet reflectors **210**, **220** disposed on opposing ends of the phonon resonator **100** that functions as a waveguide **95**. Of course, as would be apparent to one of ordinary skill in the art, a dielectric waveguide is not an essential component of a laser of the present invention. In some circumstances, a device can be constructed with a region of very high gain that acts to provide a self-guiding optical wave.

Figure 15B presents a distributed feedback laser of the present invention. As depicted in Figure 15B, the phonon resonator **100** functions as both a phonon resonator and a waveguide with substantially periodic optical characteristics (e.g. absorption or refractive index) such that the periodically varying waveguide supplies a Bragg resonance between forward and backward travelling waves. Such periodically-varying optical properties are achieved by the corrugation **97** of one or more waveguide layers. Alternatively, the periodically-varying optical properties may be achieved by providing a phonon resonator **100** comprising a multitude of adjacent phonon resonators, **100A**, **100B**, etc. (see Figure 15C) spaced so that a Bragg resonance between forward and backward travelling waves is provided.

EXAMPLE 4: Vertical cavity surface emitting laser

A phonon resonator of the present invention may also be incorporated into a vertical cavity surface emitting laser (VECSEL). As depicted in Figure 16, a VECSEL of the present invention comprises a top reflector **122** and a bottom reflector **124** positioned around a phonon resonator **100** as a p-n junction (see above). Electrodes **110** and **120** are positioned across the p-n junction and serve to inject current into the phonon resonator **100**, thereby creating optical gain.

The bottom reflector reflects approximately 100% of incident radiation and comprises alternating layers of materials having different refractive indices, n_1 and n_2. Each layer has a thickness equal to $\lambda/2$, where λ is the wavelength of the

amplified radiation. The thickness, t_{124}, of the bottom reflector **124** follows the relationship:

$$Tanh^2\left(\frac{\pi |n_2 - n_1| t_{124}}{\lambda}\right) \approx 1,$$

so that the bottom reflector **124** has approximately 100% reflectivity.

The top reflector **122** is also constructed of alternating layers, having thickness, t_{122} $\lambda/2$, of materials having refractive indices n, and n_2, and the thickness of the top layer is selected so that between approximately 90% and 100% of incident radiation is reflected. That is:

$$Tanh^2\left(\frac{\pi |n_2 - n_1| t_{122}}{\lambda}\right) \approx 0.9.$$

Thus, the top reflector **122** allows between approximately 0% and 10% of incident radiation to be emitted as photons **63**.

EXAMPLE 5: Optical amplifier

A phonon resonator of the present invention can be fashioned into an optical amplifier, for example, by incorporating the phonon resonator into a p-n junction and optical waveguide as described above (see Example 2). The p-n junction is then pumped with an injection current in such a way that the phonon resonator exhibits optical gain through stimulated emission of photons. An optical signal having a photon energy approximately equal to the band-to-band transition energy of the phonon resonator is then injected into the waveguide. The optical signal experiences amplification when it passes through the portion of the waveguide that incorporates the phonon resonator.

EXAMPLE 6: Optical communication system

As will be apparent to one of ordinary skill in the art, optical and/or optoelectronic devices incorporating a phonon resonator of the present invention can be combined with one another and/or with other devices as components of an

optical communication system. For example, one embodiment of an optical communications system of the present invention utilizes a light source (i.e. light emitting device) and/or an optical detector that incorporates a phonon resonator of the present invention. The light source is modified so that information is encoded in the intensity, phase, or frequency of the light. The detector, in turn, is designed to convert the information into electrical impulses suitable for further signal processing. In other embodiments of the present optical communication system, a phonon resonator of the present invention is incorporated into a laser, an optical amplifier, a modulator, a switch, a deflector, and/or a scanner.

As is well known in the art, optical communications can be useful for long distance communications, local area networks, optical data storage, and/or broadcast services such as cable television. Such systems are also useful for interconnections among and within circuit boards and integrated circuits.

EXAMPLE 7: Self-sustained oscillator for phonons and photons

A phonon resonator of the present invention can be constructed so that it satisfies known requirements for photon resonators (e.g. so that optical gain is greater than cavity loss; see, for example, Agrawal et al. Long Wavelength Semiconductor Lasers Van Nostrand Reinhold New York 1986; Bass (ed) Handbook of Optics, Volumes I and II, McGraw-Hill, New York, 1995, each of which is hereby incorporated by reference), and is therefore resonant for both phonons and photons. In such a structure, the phonon and photon populations are coupled and the structure functions as a self-sustained, coupled phonon/photon oscillator. As is known in the art, generic coupled oscillators that show nonlinearity exhibit hysterisis, bistability, and switching (see, for example, Tsang et al. IEEE J. Quant. Elec. 19:1621, 1983; Chapter 15 of Optical Nonlinearities in Semiconductors by Haug, Academic Press, San Diego (1988), and references cited therein). Thus, following art-known principles, in combination with the teachings of the present invention, a self-sustained, coupled phonon/photon oscillator can be produced in which the phonon and photon populations are coupled in such a way that the nonlinear dynamics lead to hysterisis, bistability, and switching in the

vibrational and/or optical output. In preferred embodiments of the self sustained, coupled phonon/photon oscillator of the present invention, a laser is constructed as set forth in either Example 3 or Example 4, and the nonlinearity is supplied by the population in the laser.

EXAMPLE 8: Optical detector/modulator

A phonon resonator of the present invention can also be incorporated into an optical photodetector or optical modulator. Figures 17 and 18 depict two different embodiments of a photodetector/modulator of the present invention.

With reference to Figure 17, a lightly doped phonon resonator **100** is constructed in a p-n junction. A transparent electrode **110** and an electrode **120** are positioned on opposite sides of the heterojunction so that incoming radiation passes through the transparent electrode **110**, and through the p-type region **82**, and is absorbed in the phonon resonator **100** so that an electron-hole pair is produced and a photocurrent is induced between electrodes **110** and **120**.

With reference to Figure 18, electrodes **111** and **121** form an interdigitated pattern on the surface of the phonon resonator, and the photodetector/modulator has a substantially horizontal geometry as compared with the embodiment depicted in Figure 17. The electrodes may either form ohmic contacts to neighboring p doped and n doped regions, or may form Schottky contacts to a uniformly doped phonon resonators. One advantage of this design is that it permits high speed switching or detection due to the close proximity of the electrodes, and therefore to the short transit time required to communicate between them.

Enhancement of Electrical Properties

The present invention also relates to indirect bandgap materials having enhanced electrical properties. Specifically, the invention encompasses materials having enhanced conductivity, including superconductivity, due to the presence of bound electron pairs. In order that certain aspects and advantages of the present invention will be more readily appreciated, we begin with a discussion of the

properties of conduction band electrons, and electron-phonon interactions, in semiconductor materials.

As illustrated in Figure 19, a conduction band electron can absorb or emit a phonon. The interaction between an electron and a phonon "scatters" the electron from one energy/momentum state to another. Specifically, absorption of a phonon increases the energy of the electron by an amount, E_p, equal to the energy of the phonon, and changes the momentum of the electron by an amount equal to the wavenumber of the phonon. Likewise, phonon emission decreases the energy of the electron, and also changes the electron momentum.

"Coherent absorption and emission" of a phonon by a single electron can also occur (see Figure 20), and results in a small net decrease in the energy of the electron relative to what its energy would have been were if truly free in a frozen lattice. With reference to Figure 20, the exclusion principle requires that an electron in state A can only undergo coherent absorption and emission of a phonon if state B is unoccupied. Thus, the presence or absence of an electron in state B can affect the energy of an electron in state A, independent of any electrostatic (e.g. Coulombic) interaction between two electrons in those states.

If two or more electrons are present, phonon-electron interactions can result in electron-electron interactions that can, in turn, lead to formation of "bound pairs" of electrons. As shown in Figure 21, if both state A and state B are occupied by electrons, and phonons of wavenumber q are available, electron-phonon interactions can result in the electrons "exchanging" states. The exclusion principle dictates that the two events involved in the exchange (i.e. the transfer of the electron originally at position A to position B, and the transfer of the electron originally at position B to position A) are not independent; hence, there is an effective electron-electron interaction. If the effective pair potential, $V(r_1-r_2)$, of the interacting electrons is negative, a "bound pair" of electrons may be produced.

Assuming that the scattering rate is proportional to the matrix element of the perturbation *V* between the two electron states $|k_1, -k_1>$ (state "A") and $|k_2, -$

$k_2>$ (state "B"), the effective pair potential between electrons in state A and state B can be calculated as follows:

$$V(r_1-r_2)=\int\int dk_1 dk_2 \langle k_1,-k_1|V|k_2,-k_2\rangle \exp(-i(k_1-k_2)\cdot(r_1-r_2))$$

In fact, exchange between a conduction band electron in state A and electron in state B, as depicted in Figure 21, is unlikely to occur, simply because, as mentioned above, electrons in the conduction band typically occupy states near the conduction band minimum. Thus, state B is unlikely to be occupied. However, as discussed above, some semiconductor materials (e.g. silicon) have a degenerate conduction band minimum. Each of the different minima of the degenerate conduction band is equally likely to be occupied. Thus, when an appropriate electron scattering mechanism is available, electronic exchanges can occur between electrons in different, degenerate, conduction band minima. In preferred embodiments of the present invention, electron scattering is provided by interaction between an electron and a phonon of appropriate wavenumber. Figure 22 depicts an example of such an exchange event, termed "intervalley scattering", occurring between opposite, degenerate conduction band minima.

In the case presented in Figure 22, an electron is scattered from a state A (wavenumber k) to a state B (wavenumber -k), upon interaction with a phonon of wavenumber $2\pi/\Lambda_L$, where Λ_L is the period of the semiconductor material lattice. Thus, the matrix element can be expressed as :

$$\langle k_1,-k_1|V|k_2,-k_2\rangle = g(k_1)\delta(k_1+k_2),$$

and the corresponding pair potential is given by:

$$V(r_1-r_2)=\int g(k_1)\exp(-2ik_1\cdot(r_1-r_2))dk_1$$

If the lattice structure is infinite, g(k) will contain only narrow components near $\pm(\pi/\lambda)e_z$, and the pair potential will have the form:

$$V(z_1-z_2)=V_0\cos[2\pi(z_1-z_2)/\Lambda_L],$$

where z denotes the direction of the lattice, e_z is a unit vector in the z direction, and V_0 is a measure of the scattering strength. We can crudely include the effects of small wave-vector scattering of each electron by postulating a "screening" of the pair potential, which is a function of the electron mean-free-path. The pair potential then has the form:

$$V(z_1-z_2)=V_0\exp(-\alpha|z_1-z_2|)\cos[2\pi(z_1-z_2)/\Lambda_L]$$

in which α denotes the inverse, single-electron mean free path. This potential is illustrated in Figure 23, in units of V_o (the maximum possible scattering strength). The pair potential is oscillatory, and damps with the electronic mean free path. An electron pair having a wavefunction with maxima that overlap the potential minima will see a minimum in energy. If V_o is comparable in magnitude to the Coulomb repulsion, and the mean free path extends over many superlattice periods, bound electron pairs may exist. The electron mean free path, which tends to decrease with temperature, therefore represents an important limiting factor in electron bound-pair formation.

The strength of the Coulomb interaction between electrons having large wavevector mismatch is proportional to $1/q^2$, where q is the magnitude of the mismatch. The Coulomb interaction between electrons in opposite valleys of a degenerate conduction band will therefore be somewhat weaker than that observed between electrons in the same conduction band valley. Thus, the probability of

intervalley bound-pair formation is much higher than is the probability of formation of bound electron pairs within a single conduction valley.

Intervalley bound pairs will only form if the pair binding energy is greater than zero. We can carry out a variational calculation of the ground state of the pair, and show that a bound state between electrons can exist even in the presence of carrier-carrier scattering.

Specifically, we postulate a one-dimensional wavefunction (in z) which is separable into center-of-mass $(z_1 + z_2)/2$ and difference $(z_1 - z_2)$ coordinates. We then examine the Schrodinger equation for the pair wavefunction

$$-\frac{\hbar^2}{2m^*_{ee}}\frac{d^2}{d\xi^2}\psi(\xi) + \left(V(\xi) + \frac{e^2}{4\pi\epsilon_0\xi}\right)\psi(\xi) = E\,\psi(\xi)$$

in which m^*_{ee} denotes the reduced mass of the pair, and ξ denotes the pair separation; $V(\xi)$ denotes the pair potential shown in figure 2 (equation 10) and the second potential energy term is the Coulomb repulsion. We introduce the following changes of variables, normalizing all length scales to q, which denotes half of the wavevector separation between conduction band minima:

$$z' = q\xi$$

$$\tilde{\alpha} = \frac{\alpha}{q}$$

$$q = \frac{\pi}{\Lambda}$$

$$E_0 = \frac{\hbar^2 q^2}{2m^*_{ee}}$$

$$V_c = \frac{e^2 q}{4\pi\epsilon}$$

The following wavefunction then serves as a trial wavefunction:

$$\psi(z') = (2\beta(1 + \beta))^{1/2} \exp(-\beta z')\sin(z'),$$

in which β is chosen that the expectation value of the energy is minimized. Completing this calculation, we find the result that β is a solution to the equation:

$$V_0 = 2\frac{(2\beta+\alpha)^2}{\alpha}) \; [E_0\beta - V_c(\ln(\beta)+1)]]$$

In the absence of Coulomb repulsion, if we allow α to approach zero (the limit of very low carrier-carrier scattering), the ground state energy approaches the limit:

$$<E> = E_0 - V_0/2,$$

The first term is the energy of the non-interacting pair, while the second term gives the binding energy. Thus, $V_o/2$ represents the binding energy in the low temperature limit.

Figure 24 shows the reduction in the binding energy with increasing α (decreasing electronic mean free path), while Figure 25 shows the binding energy as a function of the scattering potential V_0 for a fixed mean free path of 100 nm. From these calculations and Figures, we see that, when the mean free path is

much longer than the superlattice period, the electron pair binding energy is given by $V_0/2$.

As mentioned above, electrons can be scattered by interaction with phonons. We have discussed two different types of phonon-electron scattering: (i) scattering within a single conduction band valley; and (ii) intervalley scattering between different degenerate conduction band minima in the same conduction band. For some semiconductor materials, there is an additional available type of phonon-electron scattering. Some semiconductor materials, such as silicon (see Figure 8), have an interleaved fcc structure that results in duplicate, neighboring Brillouin zones. In such materials, "interzone" intervalley scattering can occur between conduction band minima of neighboring Brillouin zones, as is depicted in Figure 26, and can lead to the formation of interzone intervalley bound electron pairs.

It is well known that establishment of bound electron pairs within a material increases the conductivity of that material, because bound electron pairs behave as bosons rather than fermions, and are therefore not subject to an exclusion principle. The present invention provides a material with enhanced electrical conductivity by providing a material with bound electron pairs, preferably by increasing the rate of intervalley scattering (either direct or interzone) in the material.

The level of intervalley scattering in a given material, of course, depends on the availability of phonons having the appropriate momentum. The present invention therefore provides a phonon resonator in which the vibrational energy (i.e. the phonon density) at the momentum necessary to produce direct and/or interzone intervalley scattering is enhanced. As discussed above, such a phonon resonator is produced by providing a structure of periodically varying density, where the period of the structure is selected to increase the density of phonons having a momentum value and a wavelength appropriate to produce intervalley scattering.

As shown in Figure 8 and discussed above, crystalline silicon exhibits an indirect bandgap in which the conduction band minimum is six-fold degenerate

along the (100) direction, and occurs at approximately eight-tenths of the distance to the edge of the Brillouin zone. The degenerate conduction band minima of a single conduction band are therefore separated by $1.6\pi/a$ in silicon. Thus, for a silicon isotope superlattice to be resonant for phonons that can participate in intervalley scattering between the degenerate conduction band minima of a single conduction band, the superlattice would have to have a period of:

$$\Lambda_L = 2.5m \text{ atomic layers.}$$

For $m=1$, the case that provides the lowest-order Bragg reflection, this yields a period of about 0.625 lattice constants, or 2.5 atomic layers. Practically, it is unlikely that such a structure can be produced, simply because the superlattice period is too small.

On the other hand, Figure 8 shows that the conduction band minima of neighboring Brillouin zones are separated by only $0.4\pi/a$ in silicon. Thus, an electron could scatter from one conduction band minimum to the closest neighboring conduction band minimum by interaction with a phonon of momentum $q = 0.4\pi/a$. For a silicon isotope superlattice to be resonant for phonons that can participate in such interzone intervalley scattering, therefore, the superlattice would have to have a period of:

$$\Lambda_L = 10m \text{ atomic layers.}$$

For $m=1$, the case that provides the lowest-order Bragg reflection, this yields a period of about 2.5 lattice constants, or 10 atomic layers of silicon.

Thus, the lowest-order silicon isotope superlattice of the present invention that acts as a resonator for phonons capable of participating in interzone intervalley scattering has a period double that of the lowest-order silicon isotope superlattice of the invention that is a resonator for phonons capable of participating in indirect radiative transitions. Because lattices having periods that are integer multiples of the period of the lowest-order resonator are also resonant for the same phonons for which the lowest-order resonator is resonant, it is clear that it is possible to produce an isotope superlattice of the present invention that is resonant

both for phonons capable of participating in interzone intervalley scattering and for phonons capable of participating in indirect radiative transitions.

EXAMPLE 9: Low-resistance conductor

A phonon resonator of the present invention can be incorporated into a low-resistance conductor. One embodiment of such a low-resistance conductor, is depicted in Figure 27. As depicted in Figure 27, two devices **230a, b** are connected by means of a phonon resonator **100**, that carries electrical signals between the devices **230a, b**. As would be readily apparent to one of ordinary skill in the art, it may be desirable to dope the low-resistance conductor of the present invention, or other devices discussed herein. In such cases, doping may be accomplished by any method available in the art, including, for example, diffusion, incorporation during growth, ion implantation, or neutron transmutation doping (see, for example, Haller Semicond. Sci. Tech. 5:319, 1990, incorporated herein by reference).

EXAMPLE 10: Planar transformer

As is known in the art, a planar transformer is formed when at least two conducting pathways are arranged with respect to one another, e.g. in a serpentine configuration, so that alternating current flow is provided. A phonon resonator of the present invention can be incorporated into one or more of the conducting pathways, to produce a planar transformer with enhanced electrical conductivity, and therefore enhanced magnetic properties. Of course, a phonon resonator of the present invention could also be incorporated into other devices whose magnetic properties stem from electrical conductivity.

EXAMPLE 11: Diode

A phonon resonator of the present invention can be incorporated into a diode as depicted in Figure 28. The phonon resonator **100** is incorporated into a p-n

junction to form a diode with enhanced electrical properties. Contacts **240a**, and **b** are shown positioned on opposite sides of the junction.

EXAMPLE 12: Bipolar Transistor

Figure 29 depicts a npn bipolar transistor incorporating a phonon resonator of the present invention. The base **250** of the transistor comprises a phonon resonator **100** that enhances conduction between the emitter **260** and the collector **270**.

EXAMPLE 13: Field Effect Transistor

Figure 30 depicts a n-type Junction Field Effect Transistor (JFET) incorporating a phonon resonator of the present invention. The gate **310** comprises a phonon resonator **100** that enhances conduction between source **320** and drain **330**. As would be apparent to one of ordinary skill in the art, a phonon resonator could also be incorporated into an n-channel Metal Oxide Semiconductor Field Effect Transistor (MOSFET) (see Figure 31).

EXAMPLE 14: Integrated circuit

Figure 32 depicts an integrated circuit utilizing a combination of the above-described components (eg. a low-resistance conductor, a diode, a bipolar transistor, a JFET, and/or a MOSFET) incorporating a phonon resonator. Any useful combination of components may be utilized, and related components that do not incorporate a phonon resonator may be used in combination with components that do utilize a phonon resonator for enhanced electrical conduction.

<u>Accelerated Heat Transfer from a Phonon Resonator</u>

Electron-phonon interactions can be thought of as a source by which nonequilibrium phonons are generated. Thus, electron-phonon interactions can provide the gain mechanism necessary to achieve the vibrational analog of laser action in a resonator. Once such a phonon resonator reaches threshold, the

emitted energy becomes both coherent and highly directional. A phonon resonator operating above threshold can therefore provide accelerated heat transfer from the resonator to the substrate on which the resonator resides via the coherent, directional emission of vibrational energy to the substrate.

Further, just as a variety of systems exhibit stochastic resonances in the presence of nonlinearities, vibrational anharmonicities combined with a phonon resonator would be expected to exhibit stochastic resonances. These resonances are both coherent and directional, providing accelerated heat transfer from (or through) an isotope superlattice.

Method of Producing a Phonon Resonator

A phonon resonator of the present invention can be fabricated by any of a variety of methods. We describe here the preparation of an isotope superlattice phonon resonator. There are two aspects to any method of producing an isotope superlattice: i) providing separate, substantially pure isotopes; and ii) assembling the substantially pure isotopes in a layered structure of the invention. These two aspects can be performed separately or simultaneously.

Available methods for isotope separation include, among others, gaseous diffusion, gas centrifuge, fractional distillation, aerodynamic separation, chemical exchange, electromagnetic separation, and laser dissociation/ionization (see, for, example London Separation of Isotopes, London: George Newnes, Ltd., 1961; Spindel et al. J. Chem. Engin. 58, 1991; Olander Sci. Am. 239:37, 1978; Stevenson et al. J. AM Chem. Soc. 108: 5760, 1986; Stevenson et al. Nature 323:522, 1986; Bigelelsen Science 147: 463, 1965; Tanaka et al. Nature 341: 727, 1989; Ambartzumion Applied Optics, 11, p. 354, 1972; N.R. Isenor et al. Can. J. Phys. 51:1281, 1973; Epling et al. Am. Chem. Soc. 103:1238, 1981; Kamioka et al. J. Phys. Chem. 90:5727, 1986; Lyman et al. J. App. Phys. 47:595, 1976; Arai et al. Appl. Phys. B53:199, 1991; Clark et al. Appl. Phys. Lett. 32:46, 1978, each of which is incorporated herein by reference). Also, float zone segregation may be utilized for purification of a semiconductor.

Methods available for assembling isotopically pure materials into an isotope superlattice of the present invention include, for example, chemical vapor deposition (CVD), molecular beam epitaxy (MBE), and chemical beam epitaxy (CBE) (see, for example, Sedwick et al J. Vac Sci. Technol. A 10(4), 1992, incorporated herein by reference). Isotopically pure materials prepared by any available method, including those recited above, may be used in combination with standard CVD, MBE, or CBE technologies to produce an isotope superlattice of the present invention.

Additionally, an isotope superlattice of the present invention may be prepared by performing isotope separation and layer deposition simultaneously. In a particularly preferred embodiment of the present invention, the laser dissociation isotope separation technique is utilized in combination with a CVD process, (i.e. as a "laser-assisted CVD" process) in a single chamber, to produce an isotope superlattice of the present invention (see Example 18).

Examples 15-18 provide specific descriptions of fractional distillation, chemical exchange, laser dissociation, and laser-assisted CVD techniques, respectively. Fractional distillation can be utilized, for example, in the preparation of bulk precursors for epitaxial or Czochralski growth. Laser-assisted CVD provides in situ isotope separation and layer growth. These examples are descriptions of preferred embodiments, and are not intended to limit the scope of the invention as a whole.

EXAMPLE 15: Fractional Distillation

It is well known that there exist slight differences in the heat of vaporization of different isotopic species contained in a liquid. The method of fractional distillation provides, after processing, for one isotopic species to remain in the liquid phase while the other is drawn off in a vapor phase. A preferred method for the separation of silicon isotopes would be the fractional distillation of $SiCl_4$, a material which is liquid at room temperature but which provides a comparatively

high vapor pressure. Since $SiCl_4$ is a standard precursor for production of both silane and elemental silicon, there is very little waste in this process.

EXAMPLE 16: Chemical Exchange

Chemical exchange provides separation between different isotopic species by virtue of isotopic differences in free energy and the corresponding influence on equilibrium chemical reactions. It has been shown that, under suitable circumstances, isotopic species will show different ratios in reactant and product mixtures for certain equilibrium reactions. The key requirements for such chemical exchange mechanisms to be effective are:

- The use of immiscible reactant/product phases (immiscible liquids or liquid-gas reactions);
- Electronic orbitals similar to the delocalized orbitals found in aromatic compounds; and
- An appropriate catalyst to speed the reaction to equilibrium.

EXAMPLE 17: Laser dissociation and isotope-selective heating.

Laser dissociation and isotope-selective heating is the preferred method for *in situ* separation and growth of isotope-pure layers.

The laser dissociation technique of isotope separation relies on the fact that many molecules exhibit vibrational transitions in the near- to mid- infrared range. Bombarding molecules with radiation tuned to their vibrational transitions dissociates the molecules. Because the vibrational transitions of molecules are dependent on the masses of the atoms, molecules containing different isotopes of a given atom exhibit different transition energies. Thus, molecules containing different isotopes of a given atom are dissociated by bombardment with radiation of different frequencies.

A variety of laser sources are available with access to the near- to mid-infrared region, that could be used to dissociate molecules having vibrational transitions in that region. For example, transitions in the 9-10 μm range are accessible using a CO_2 laser; various solid state lasers can access the near-infrared; and optical parametric oscillator technology can be utilized to achieve wide tunability.

In order to separate one isotope of an atom from another using laser dissociation, a mixture of molecules including the different isotopes is bombarded with radiation (i.e. from a laser) tuned to the vibrational transition frequency of a first molecule including a first isotope. The first molecule therefore becomes excited and can be separated from other molecules in the mixture by virtue of its higher temperature, or its increased sensitivity to photodissociation (see below). After the first isotope has been isolated, the radiation frequency can be adjusted by, for example, tuning the laser to a new frequency or providing an alternate laser source, so that the radiation frequency is tuned to the vibrational transition frequency of a second molecule, including a second isotope, and that second molecule can be isolated. The procedure is repeated until all desired isotopes are isolated.

EXAMPLE 18: Laser-assisted CVD

A silicon isotope superlattice of the present invention may be produced by exposing silane (SiH_4) gas to infrared radiation in a chamber such as that depicted in Figure 21. A wafer **300** is held in the chamber at a temperature below that required for spontaneous decomposition of silane. The wafer **300** may be positioned on a heater **350**. A first laser **310** is tuned to the vibrational transition frequency of the first desired silicon isotope (e.g. Si^{28}). The laser excitation provides a large temperature differential between the desired isotope and the other isotopes, resulting in deposition of only the desired isotope on the wafer **300**. Alternatively, the first laser **310** can be used to excite only the first desired silicon isotope, and a second laser **320** can provide a high energy photon to photoionize

the excited silane molecules (i.e. those silane molecules containing the desired silicon isotope), producing ions that have high reactivity with the surface of the wafer **300**.

After the appropriate number of atomic layers of the first silicon isotope have been laid down, the first laser **310** is adjusted and tuned to the vibrational transition frequency of the second desired silicon isotope (e.g. Si^{30}). The appropriate number of atomic layers of the second silicon isotope are then laid down. The process is reiterated until the desired isotope superlattice structure is produced.

After the growth of the isotope superlattice, calibration of layer thickness can be carried out through a SIMS analysis. Standard *in situ* monitoring (e.g. RHEED) can also be carried out to determine, for example, if the majority isotope layers grow at a dramatically faster rate than the minority isotope layers. If so, the disparity can be corrected, for example, by adjusting the laser power (e.g. lowering the laser power for depositing the majority isotope layers).

At all times during the growth of the isotope superlattice of the present invention, the temperature in the chamber should be high enough to maintain the surface mobility of deposited silicon atoms, in order to assure epitaxial growth. It is also preferred that the isotope superlattice be grown in the direction of the lowest conduction band minimum. For silicon, this corresponds to the (100)(010)(001) family of growth planes; for germanium, a (111) superlattice is desirable. Diamond has a band structure closer to that of silicon, and therefore requires similar growth directions. As would be apparent to one of ordinary skill in the art, other growth directions are possible, provided that the periodicity in the appropriate direction (e.g. in the (100) direction for silicon) meets the criteria discussed herein.

The isotope purity of an isotope superlattice of the present invention can be tested using any available method such as, for example, secondary ion mass spectroscopy or Raman scattering.

As will be appreciated by one of ordinary skill in the art, important requirements for production of an isotopically pure superlattice of the present invention include the requirement that the wafer **300** be atomically clean, that the switching of laser frequencies does not lead to deposition of "mixed" isotopic layers, and that the chamber provide a substantially collision-free environment.

Each of these requirements is discussed in turn. First of all, the wafer **300** can be cleaned using standard methods and oxide removal should be performed.

In order to avoid problems associated with mixed isotope populations produced during laser tuning, one particular embodiment of the method of the present invention provides a plurality of wafers **300** assembled onto a rotating carousel whose rotation is timed such that only pure isotope layers are deposited on wafers (i.e. so that mixed populations are produced during the times that gaps, instead of wafers, are exposed to the silane stream).

A substantially collision-free environment is ensured in the method of the present invention, as depicted in Figure 21, by having the first **310** and second **320** lasers intersect at a point close to the surface of the wafer **300**.

As will also be appreciated by one of ordinary skill in the art, it is desirable when practicing the preferred method of the present inventors to ensure that silicon layers are deposited preferentially if not uniquely, on the wafer **300**, and not on other parts of the chamber. Thus, it is desirable that the infrared windows **330** and **340**, through which the first and second laser beams are directed, be made of a material that will not be coated with silicon following the excitation.

Other Embodiments

The foregoing has provided a description of certain preferred embodiments of the present invention, which description is not meant to be limiting. Other embodiments of the present invention are within the scope of the following claims.

In particular, the present invention is not limited to semiconductor materials. Materials such as diamond may also be used. Additionally, a phonon resonator

may be incorporated into any of a variety of other optical or electrical devices, as would readily be appreciated by one of ordinary skill in the art. For example, a phonon resonator may be incorporated into a superconducting quantum interference device (SQUID), a Josephson junction, a high frequency transistor, or a microwave detector, in order to enhance the electrical and/or thermal properties of those devices.

Also, the present specification describes a structure of periodically varying density (e.g. an isotope superlattice). The density of the preferred structure described above is varied by providing alternating layers of material of different mass density. Another way to periodically vary the mass density of a structure is to introduce a standing wave into the structure. However, because phonons normally only propagate 100-1000 Å without scattering, a sound wave having a wavelength of much less than 1000 Å would be required to establish the necessary standing wave. Such sound waves cannot practically be generated. Thus, the preferred embodiment of the structure of periodically varying density of the present invention is a structure having layers of material of different density, most preferably an isotope superlattice as described herein.

As will be apparent to one of ordinary skill in the art, a structure of periodically varying density such as that described herein could be designed to suppress, rather than to enhance, phonons of particular wavevectors. For example, it is sometimes desirable to avoid phonon-electron interactions that result in ionization of an electron bound in a quantum well or a quantum wire structure. A structure of the present invention can be assembled as described herein, having been designed not to be resonant for, and therefore to suppress, phonons at the energies required to ionize an electron. Such a structure would improved the performance of the quantum well or wire.

As will also be apparent to one of ordinary skill in the art, an isotope superlattice of the present invention could be constructed from isotopically enriched layers of two or more different elements or compounds, provided that the overall structure is designed to be resonant for phonons of appropriate wavevector

to participate in phonon-electron interactions. For example, a structure could be assembled comprising two atomic layers of a carbon isotope alternating with three atomic layers of a silicon isotope. Such a structure would exhibit a large (greater than approximately 2.5 eV) indirect bandgap, and would be suitable for use in, for example, a light emitting device such as those described herein.

The above-described preferred embodiment of the method of the invention utilizes silane (SiH_4) as a starting material to produce a silicon isotope superlattice of the invention by laser-assisted isotope separation. Other starting materials could also be used such as, for example, SiH_2Cl_2, SiF_4, or any other member of the halide-silane family of gases, although heavier molecules such as dichlorosilane (SiH_2Cl_2) have complicated vibrational spectra, which makes identification of a vibrational absorption frequency that is clearly associated with a single silicon isotope is more difficult. Thus, for the purposes of the present invention, silane is the preferred source gas for laser-assisted isotope separation.

Also, while the Examples presented herein describe the fabrication and application of one dimensional phonon resonators, one of ordinary skill in the art would recognize that structures that are periodic in more than one (eg. in two or three dimensions can also be fabricated and used in accordance with the present teachings. Such structures provide resonances for phonons in up to three directions in the crystal. The method for determining the resonator period in two or three dimensions is precisely analogous to that used for one dimension. A three dimensional periodicity has the effect of modifying the phonon spectrum of the entire crystal rather than the phonon spectrum in one dimension.

Claims

1. A structure of substantially periodically varying density comprising:

at least one first region of a first density; and

at least one second region of a second density, said first and second regions being adjacent one another and alternating in said structure so that said structure has a substantially periodically varying density, the period of said structure being selected such that said structure is substantially resonant for phonons of appropriate wavevector to participate in electron-phonon interactions.

2. The structure of claim 1, further comprising at least one dopant.

3. The structure of claim 1, wherein said first region comprises a first layer and said second region comprises a second layer so that the density of said structure varies periodically in only one dimension.

4. The structure of claim 1 wherein the density of said structure varies periodically in more than one dimension.

5. The structure of claim 3 comprising an isotope superlattice wherein:

said at least one first layer comprises at least one layer enriched for a first isotope of a first element;

said at least one second layer comprises at least one layer enriched for a second isotope of a second element.

6. The structure of claim 5 wherein said first element and said second element are the same and said first isotope and said second isotope represent different isotopes of that element.

7. The structure of claim 6 wherein said element is an indirect bandgap material.

8. The structure of claim 6 wherein said element comprises silicon.

9. The structure of claim 8 wherein said first isotope is Si^{30} and said second isotope is Si^{28}.

10. The structure of claim 8 wherein said first isotope is Si^{30} and said second isotope is Si^{29}.

11. The structure of claim 8 wherein said first isotope is Si^{29} and said second isotope is Si^{28}.

12. The structure of claim 9 having a period that is an integer multiple of five atomic layers.

13. The structure of claim 1 wherein the period of said structure is selected such that said structure is substantially resonant for phonons of appropriate wavevector to participate in radiative electronic transitions.

14. The structure of claim 13, wherein said first region comprises a first layer and said second region comprises a second layer so that the density of said structure varies periodically in only one dimension.

15. The structure of claim 14 comprising an isotope superlattice wherein:

said at least one first layer comprises at least one layer enriched for a first isotope of a first element;

said at least one second layer comprises at least one layer enriched for a second isotope of a second element.

16. The structure of claim 15 wherein said first element and said second element are the same and said first isotope and said second isotope represent different isotopes of that element.

17. The structure of claim 16 wherein said element is an indirect bandgap material.

18. The structure of claim 16 wherein said element comprises silicon.

19. The structure of claim 18 wherein said first isotope is Si^{30} and said second isotope is Si^{28}.

20. The structure of claim 18 wherein said first isotope is Si^{30} and said second isotope is Si^{29}.

21. The structure of claim 18 wherein said first isotope is Si^{29} and said second isotope is Si^{28}.

22. The structure of claim 19 having a period that is an integer multiple of five atomic layers.

23. The structure of claim 1 wherein the period of said structure is selected such that said structure is substantially resonant for phonons of appropriate wavevector to participate in intervalley scattering of conduction band electrons.

24. The structure of claim 23 wherein said first region comprises a first layer and said second region comprises a second layer so that the density of said structure varies periodically in only one dimension.

25. The structure of claim 24 wherein the density of said structure varies periodically in more than one dimension.

26. The structure of claim 25 comprising an isotope superlattice wherein:

said at least one first layer comprises at least one layer enriched for a first isotope of a first element;

said at least one second layer comprises at least one layer enriched for a second isotope of a second element.

27. The structure of claim 26 wherein said first element and said second element are the same and said first isotope and said second isotope represent different isotopes of that element.

28. The structure of claim 26 wherein said element has adjacent Brillouin zones.

29. The structure of claim 27 wherein said element comprises silicon.

30. The structure of claim 29 wherein said first isotope is Si^{30} and said second isotope is Si^{28}.

31. The structure of claim 29 wherein said first isotope is Si^{30} and said second isotope is Si^{29}.

32. The structure of claim 29 wherein said first isotope is Si^{29} and said second isotope is Si^{28}.

33. The structure of claim 30 having a period that is an integer multiple of ten atomic layers.

34. The structure of claim 1 wherein the period of said structure is selected such that said structure is substantially resonant for phonons generated by stimulated emission.

35. The structure of claim 34 wherein said phonons generated by stimulated emission are directional.

36. The structure of claim 35 wherein said phonons generated by stimulated emission are coherent.

37. The structure of claim 1 wherein said structure provides a stochastic phonon resonance.

38. The structure of claim 34 wherein said structure provides accelerated heat transfer.

39. The structure of any of claims 34-38 wherein said first region comprises a first layer and said second region comprises a second layer so that the density of said structure varies periodically in only one dimension.

40. The structure of any of claims 34-38 wherein the density of said structure varies periodically in more than one dimension.

41. The structure of claim 34 comprising an isotope superlattice wherein:

said at least one first layer comprises at least one layer enriched for a first isotope of a first element;

said at least one second layer comprises at least one layer enriched for a second isotope of a second element.

42. The structure of claim 41 wherein said first element and said second element are the same and said first isotope and said second isotope represent different isotopes of that element.

43. The structure of claim 41 wherein said element has adjacent Brillouin zones.

44. The structure of claim 42 wherein said element comprises silicon.

45. The structure of claim 44 wherein said first isotope is Si^{30} and said second isotope is Si^{28}.

46. The structure of claim 44 wherein said first isotope is Si^{30} and said second isotope is Si^{29}.

47. The structure of claim 44 wherein said first isotope is Si^{29} and said second isotope is Si^{28}.

48. The structure of claim 45 having a period that is an integer multiple of five atomic layers.

49. A structure having degenerate conduction band valleys and substantially periodic variations in material composition so that scattering of electrons between said degenerate conduction band valleys is enhanced relative to intervalley electron scattering in a structure lacking said substantially periodic variations.

50. The structure of claim 49 further including at least one dopant.

51. The structure of claim 50 wherein at least one of said at least one dopants is introduced by neutron transmutation.

52. The structure of claim 50 wherein at least some of said substantially periodic variations in material composition are achieved by substantially periodically doping said structure.

53. The structure of claim 49, said structure being fashioned from a material comprising silicon.

54. The structure of claim 49 wherein said substantially periodic variations occur in only one dimension.

55. The structure of claim 49 wherein said substantially periodic variations occur in more than one dimension.

56. The structure of one of claims 49 and 54 wherein said substantially periodic variations in material composition comprise alternating layers of a first material of a first density and a second material of a second density.

57. The structure of claim 56 wherein said first material is enriched for a first isotope of a first element and said second material is enriched for a second isotope of a second material.

58. The structure of claim 57 wherein said first element and said second element are the same and said first isotope and said second isotope represent different isotopes of that element.

59. The structure of claim 58 wherein said element is an indirect bandgap material.

60. The structure of claim 59 wherein said element comprises silicon.

61. The structure of claim 60 wherein said first isotope is Si^{30} and said second isotope is Si^{28}.

62. The structure of claim 61, further including doping atoms produced by neutron transmutation of said Si^{30}.

63. The structure of claim 60 wherein said first isotope is Si^{30} and said second isotope is Si^{29}.

64. The structure of claim 60 wherein said first isotope is Si^{29} and said second isotope is Si^{28}.

65. The structure of any one of claims 5, 15, 26 or 41 wherein said first element and said second element are different.

66. The structure of claim 65 wherein:

said first element comprises carbon;

said second element comprises silicon;

said at least one first layer comprises two atomic layers enriched for a first carbon isotope; and

said at least one second layer comprises three atomic layers enriched for a first silicon isotope.

67. A light-emitting device, comprising:

the structure of claim 1;

a first electrode disposed on a first side of said structure; and

a second electrode disposed on a second side of said structure, said second side being opposite said first side.

68. The light-emitting device of claim 67 wherein said structure has a thickness of at least ten periods.

69. The light-emitting device of claim 67 wherein said first electrode is transparent and said device is arranged and constructed so that light emitted from said device passes through said transparent first electrode.

70. The light-emitting device of claim 67, further comprising a p-doped region and a n-doped region that form a p-n junction between said electrodes, and wherein said structure is positioned at said junction so that said device is a light-emitting diode.

71. The light-emitting device of claim 70 wherein said p-doped region and said n-doped region have a higher bandgap than does said structure so that electrons and holes are confined within said structure.

72. The light-emitting device of claim 70 further comprising a dielectric waveguide.

73. The light-emitting device of claim 72 wherein said dielectric waveguide comprises said p-doped region and said n-doped region, each having a refractive index higher than that of said structure.

74. The light-emitting device of claim 70 further comprising a first facet reflector adjacent said n-doped region and second facet reflector adjacent said p-doped region so that said device functions as a cleaved facet reflection laser.

75. The light-emitting device of claim 70 wherein said structure comprises multiple adjacent phonon resonators spaced such that said device functions as a gain-coupled distributed feedback laser.

76. The light-emitting device of claim 70 wherein said structure has a periodic refractive index or gain so that said device functions as a distributed feedback laser.

77. The light-emitting device of claim 70 further comprising a first reflector adjacent said p-doped region and a second reflector adjacent said n-doped region, each of said reflectors comprising alternating layers of materials having different refractive indices, the thickness of the layers of said first reflector being selected so that said first reflector has approximately 100% reflectivity, and the thickness of the layers of said second reflector being selected so that said second reflector has between approximately 90% and 100% reflectivity, said device functioning as a vertical cavity surface emitting laser.

78. The structure of claim 67, wherein said structure is constructed to be substantially resonant for both phonons and photons, so that said structure functions as a self-sustained, coupled phonon/photon oscillator.

79. An optical detector device comprising:
a p-doped region;
an n-doped region forming a p-n junction with said p-doped region;
the structure of claim 1, positioned at said p-n junction;
a first electrode in contact with said p-doped region; and
a second electrode in contact with said n-doped region, said optical detector being arranged an constructed so that radiation enters said device through said first electrode, passes through said p-doped region, and is absorbed in said structure, thereby creating an electron-hole pair in said structure and producing a photocurrent between said electrodes.

80. An optical detector device comprising:

the structure of claim 1, said structure having at least one p-doped region and at least one n-doped region;

at least one first electrode in ohmic contact with said at least one n-doped region; and

at least one second electrode in ohmic contact with said at least one p-doped region.

81. An optical detector device comprising:

the structure of claim 1, said structure being slightly doped; and

at least two electrodes in Schottky contact with said structure.

82. A device comprising:

a first electrical device;

a second electrical device; and

a low resistance connector connecting said first and second devices, said low resistance connector comprising the structure of claim 1.

83. A planar transformer comprising:

at least two conducting pathways, said conducting pathways being arranged with respect to one another such that alternating current flow is provided in said transformer, wherein at least one of said at least two conducting pathways comprises the structure of claim 1.

84. In a planar transformer having at least two conducting pathways, the improvement that comprises incorporating a phonon resonator that is substantially resonant for phonons of appropriate wavevector to participate in phonon-electron interactions into at least one of said at least two conducting pathways.

85. An electrical diode comprising:

the structure of claim 1;

a first electrode disposed on a first side of said structure; and

a second electrode disposed on a second side of said structure, said second side being opposite said first side.

86. A bipolar transistor comprising:

a first and a second n-doped region;

a p-doped positioned between said first and second n-doped regions, said p-doped region comprising the structure of claim 1.

87. In an npn bipolar transistor having a p-type base, the improvement comprising incorporating a phonon resonator that is substantially resonant for phonons of appropriate wavevector to participate in phonon-electron interactions into said base.

88. A field effect transistor comprising:

a first and a second n-doped region;

a p-doped region positioned between said first and second n-doped regions, said p-doped region comprising the structure of claim 1.

89. In an n-type field effect transistor having a p-type gate, the improvement comprising incorporating a phonon resonator that is substantially resonant for phonons of appropriate wavevector to participate in phonon-electron interactions into said gate.

90. A metal oxide semiconductor field effect transistor comprising:

a first and a second n-doped region;

a p-doped region positioned between said first and second n-doped regions, said p-doped region comprising the structure of claim 1.

91. In an n-channel metal oxide semiconductor field effect transistor having a p-type gate, the improvement comprising incorporating a phonon resonator that is substantially resonant for phonons of appropriate wavevector to participate in phonon-electron interactions into said gate.

92. An integrated circuit comprising a plurality of bipolar transistors wherein at least one transistor of said plurality of transistors comprises the structure of claim 1.

93. An integrated circuit comprising a plurality of field effect transistors wherein at least one field effect transistor of said plurality of field effect transistors comprises the structure of claim 1.

94. An integrated circuit comprising a plurality of metal oxide semiconductor field effect transistors wherein at least one metal oxide semiconductor field effect transistor of said plurality of metal oxide semiconductor field effect transistors comprises the structure of claim 1.

95. An integrated circuit comprising a plurality of conductors wherein at least one said conductor of said plurality of conductors comprises the structure of claim 1.

96. The integrated circuit of any one of claims 92-95 further comprising an optical modulator.

97. The integrated circuit of claim 96 wherein said optical modulator comprises a phonon resonator that is substantially resonant for phonons of appropriate wavevector to participate in phonon-electron interactions.

98. The integrated circuit of claim 97 wherein said phonon resonator comprises a structure of substantially periodically varying density comprising:

at least one first region of a first density; and

at least one second region of a second density, said second regions being adjacent to one another and alternating in said structure so that said structure has a substantially periodically varying density, the period of said structure being selected such that said structure is substantially resonant for phonons of appropriate wavevector to participate in electron-phonon interactions.

99. In a device selected from the group consisting of light emitting devices, light emitting diodes, laser diodes, cleaved facet reflection lasers, distributed feedback lasers, vertical cavity surface emitting lasers, optical amplifiers, optical detectors, optical modulators, non-linear optical devices, optical arrays, optical switches, optical deflectors, optical scanners, optical communication systems, electrical conductors, planar transformers, diodes, bipolar transistors, field-effect transistors, integrated circuits, SQUIDs, Josephson junctions, transducers, and microwave detectors, the improvement that comprises incorporating a phonon resonator that is substantially resonant for phonons of appropriate wavevector to participate in phonon-electron interactions.

100. The device of any one of claims 67, 79-83, 86, 88, 90, or 92-95 wherein said structure comprises an isotope superlattice wherein:

said at least one first layer comprises at least one layer enriched for a first isotope of a first element;

said at least one second layer comprises at least one layer enriched for a second isotope of a second element.

101. The device of claim 100 wherein said first element and said second element are the same and said first isotope and said second isotope represent different isotopes of that element.

102. The device of claim 101 wherein said element is an indirect bandgap material.

103. The device of claim 101 wherein said element comprises silicon.

104. A method for producing a phonon resonator comprising the step of producing a structure of substantially periodically varying density comprising:

at least one first layer of a first density; and

at least one second layer of a second density, said first and second layers being adjacent one another and alternating in said structure so that said structure has a substantially periodically varying density, the period of said structure being selected such that said structure is substantially resonant for phonons of appropriate wavevector to participate in electron-phonon interactions.

105. The method of claim 104 wherein the step of producing comprises producing an isotope superlattice by:

separating isotopes; and

assembling said superlattice.

106. The method of claim 105 wherein the step of separating comprises separating by a method selected from the group consisting of distillation, extraction, centrifugation, diffusion, electrochemical methods, and electromagnetic methods.

107. The method of claim 105 wherein the step of assembling comprises assembling by a method selected from the group consisting of: chemical vapor deposition, molecular beam epitaxy, and chemical beam epitaxy.

108. The method of claim 104 wherein the steps of separating and assembling are performed separately.

109. The method of claim 104 wherein the steps of separating and assembling are performed simultaneously.

110. The method of claim 109 wherein said structure is produced using laser-assisted chemical vapor deposition.

111. The method of claim 105 wherein the step of assembling comprises:

preparing a first layer enriched for a first isotope of a first element;

preparing a second layer enriched for a second isotope of a second element;

alternating said first and second layers adjacent one another so that said superlattice has a substantially periodically varying density, the period of which is selected such that said superlattice is substantially resonant for phonons of appropriate wavevector to participate in electron-phonon interactions.

112. The method of claim 111 wherein said first element and said second element are the same so that the step of assembling comprises:

preparing a first layer enriched for a first isotope of an element;

preparing a second layer enriched for a second isotope of said element.

113. The method of claim 112 wherein said element comprises silicon and the step of assembling comprises:

preparing a first layer enriched for Si^{30};

preparing a second layer enriched for Si^{28}.

114. The method of claim 112 wherein said element comprises silicon and the step of assembling comprises:

preparing a first layer enriched for Si^{30};

preparing a second layer enriched for Si^{29}.

115. The method of claim 112 wherein said element comprises silicon and the step of assembling comprises:

preparing a first layer enriched for Si^{29};

preparing a second layer enriched for Si^{28}.

5

116. The method of claim 113 wherein the step of alternating comprises alternating layers of Si^{30} and Si^{28} of appropriate atomic thicknesses that said isotope superlattice has a period that is an integer multiple of five atomic layers.

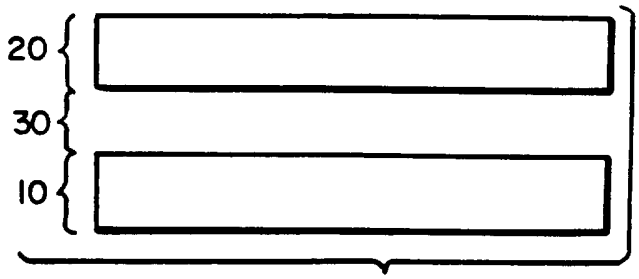

FIG. 1

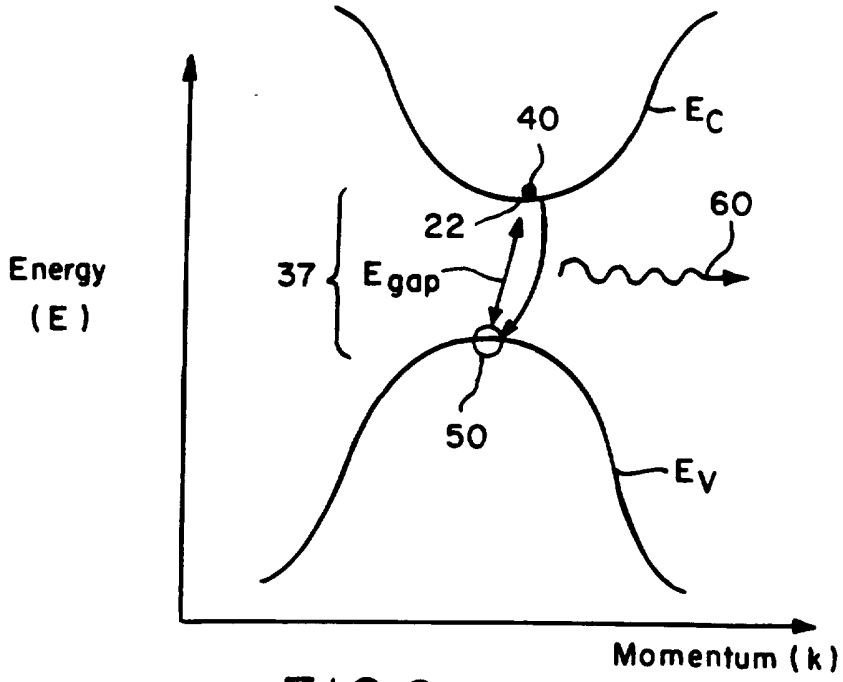

FIG.2

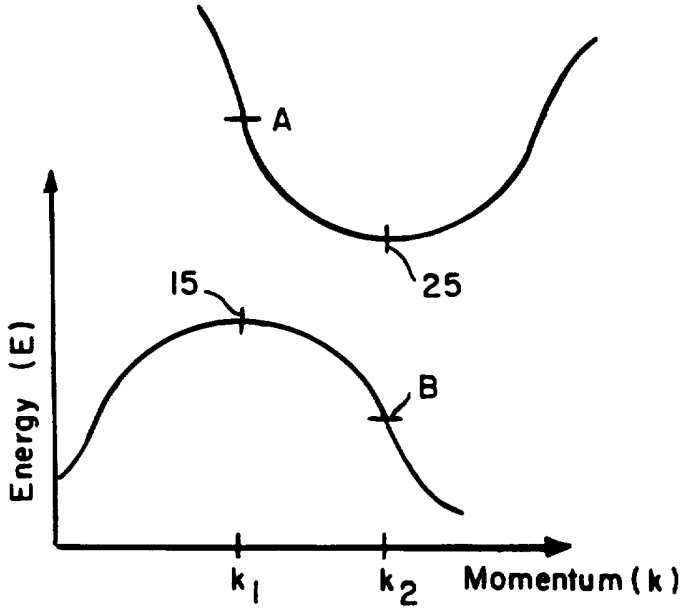

FIG. 3

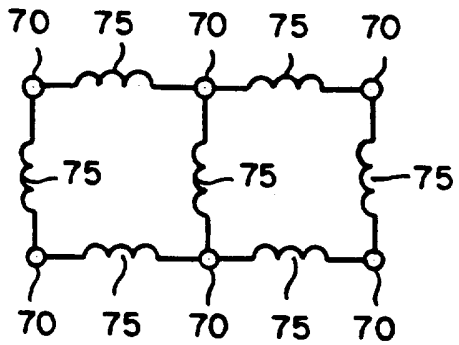

FIG. 5

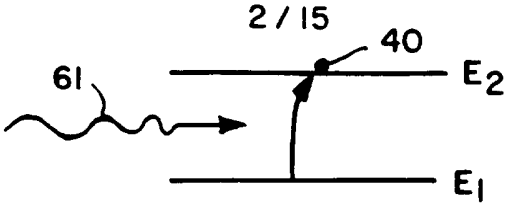

FIG.4A

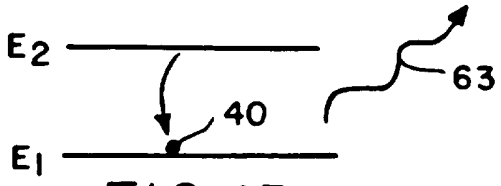

FIG.4B

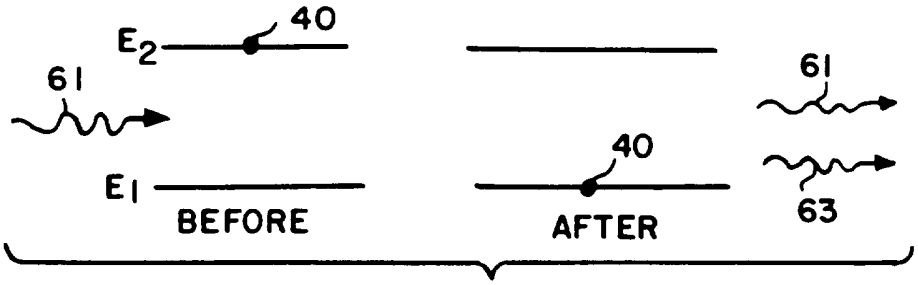

FIG. 4C

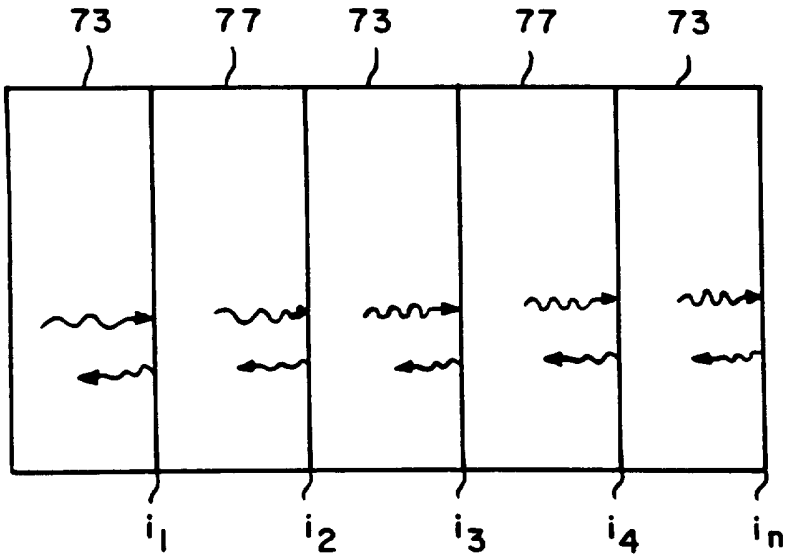

FIG. 7

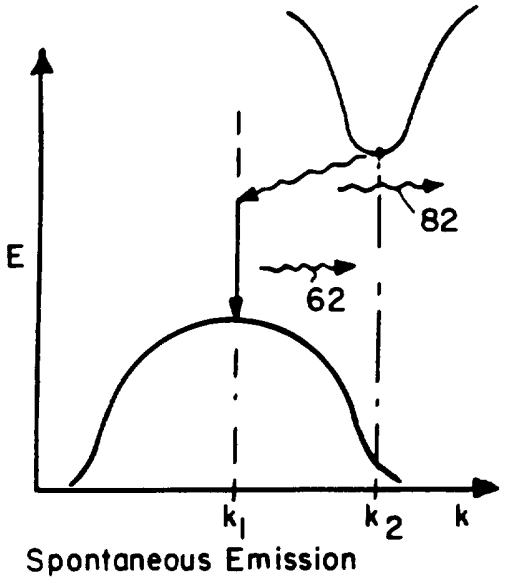

Spontaneous Emission

FIG.6A

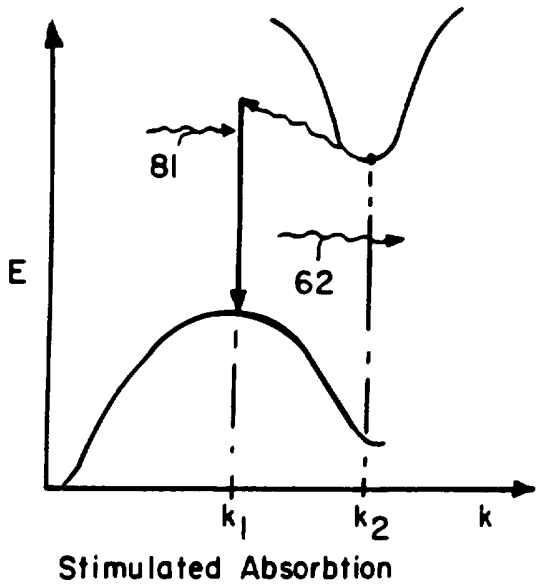

Stimulated Absorbtion

FIG.6B

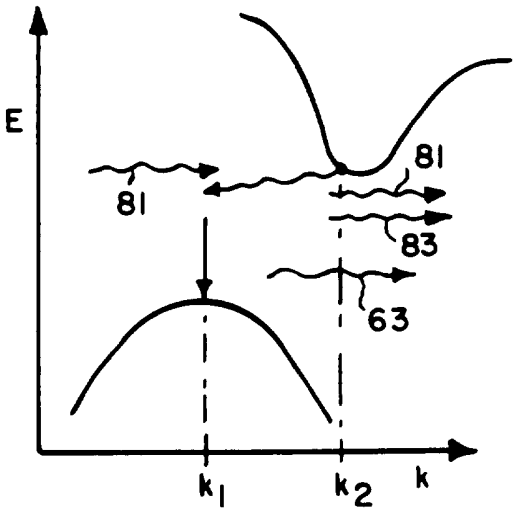

Stimulated Emission

FIG.6C

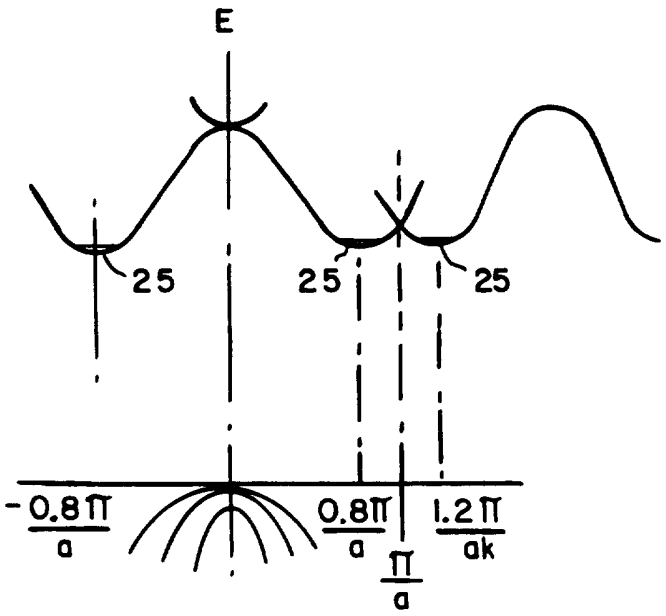

FIG. 8

FIG.9

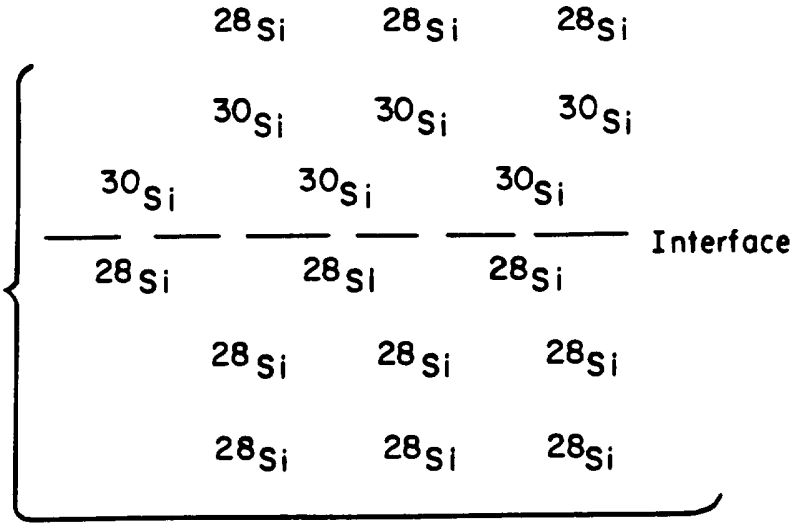

FIG.10

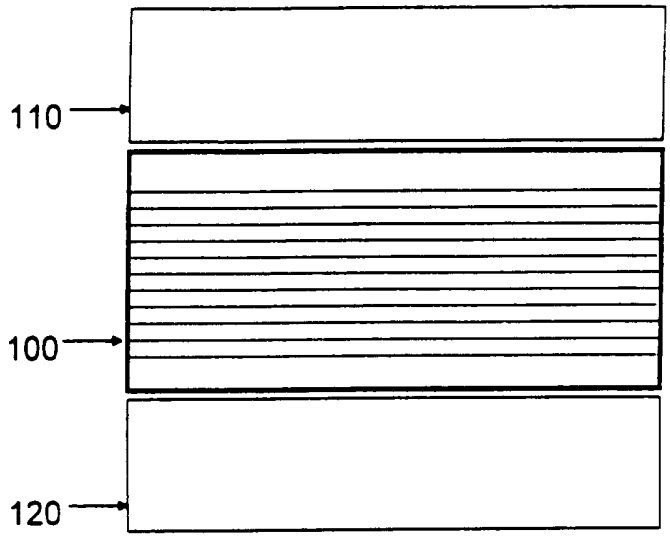

FIG.11A

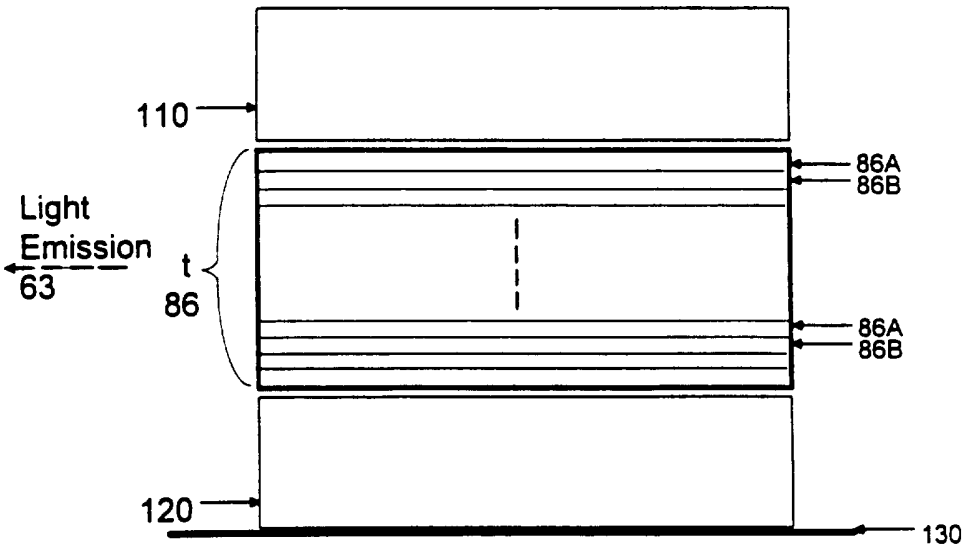

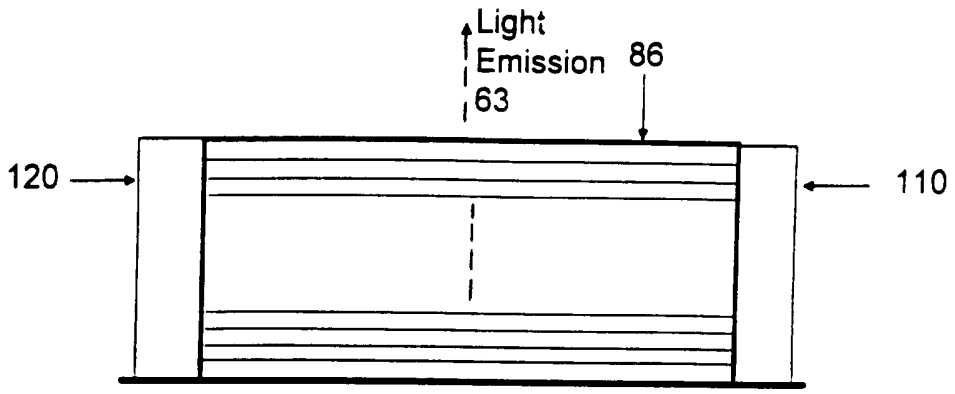

FIG.11B

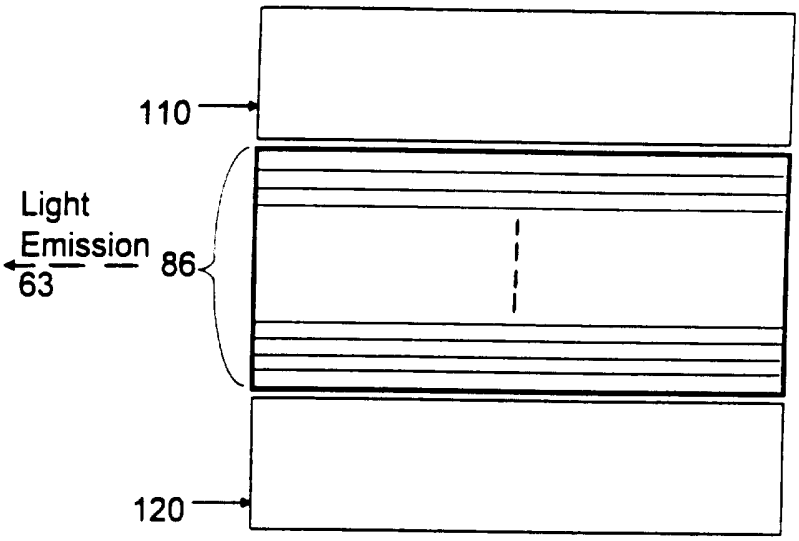

FIG.11C

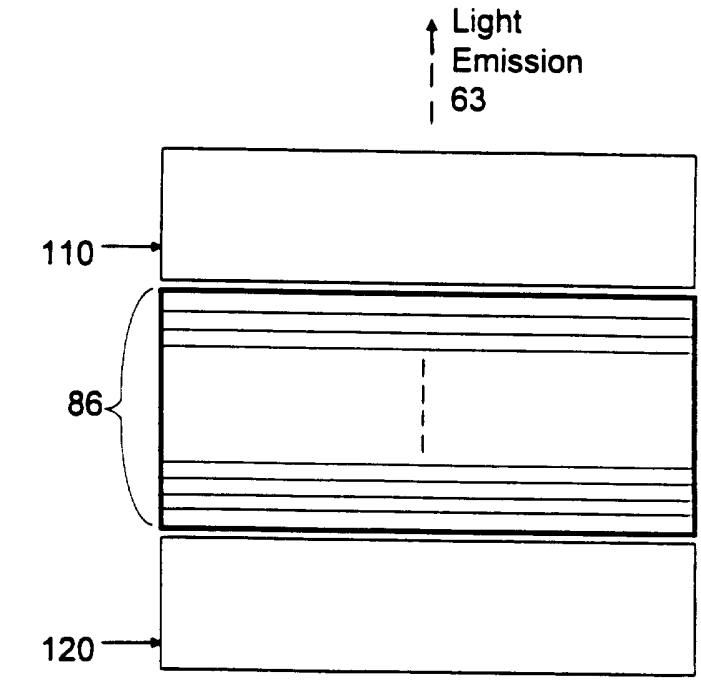

FIG.11D

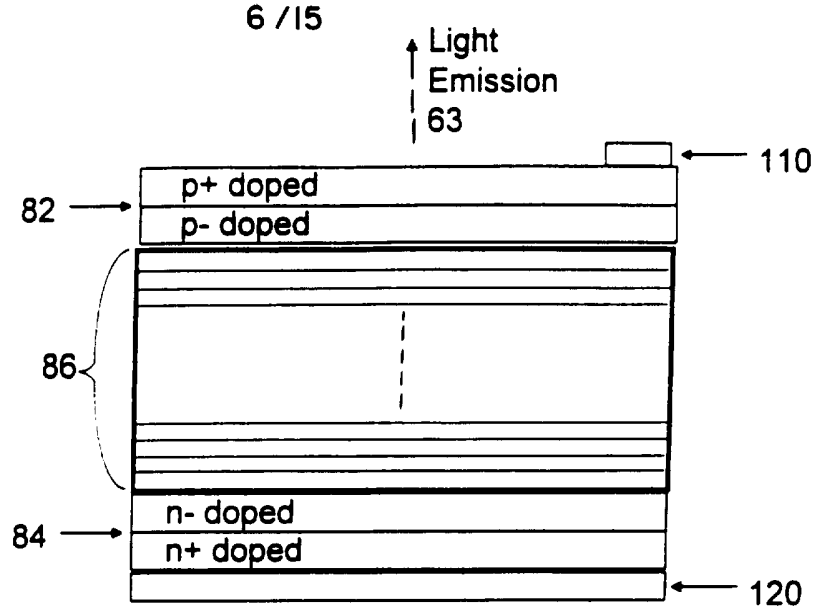

FIG.12

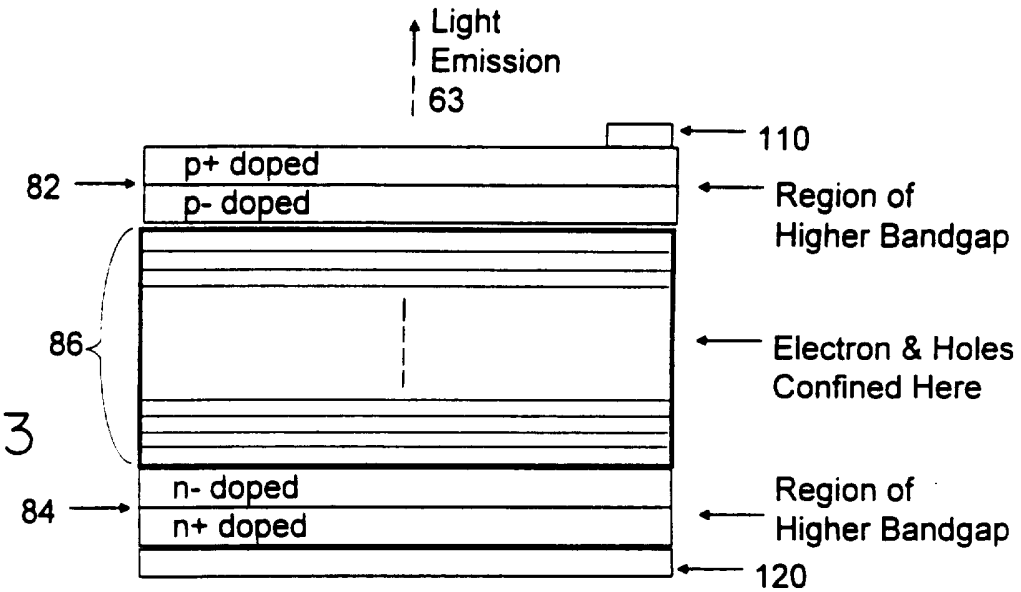

FIG.13

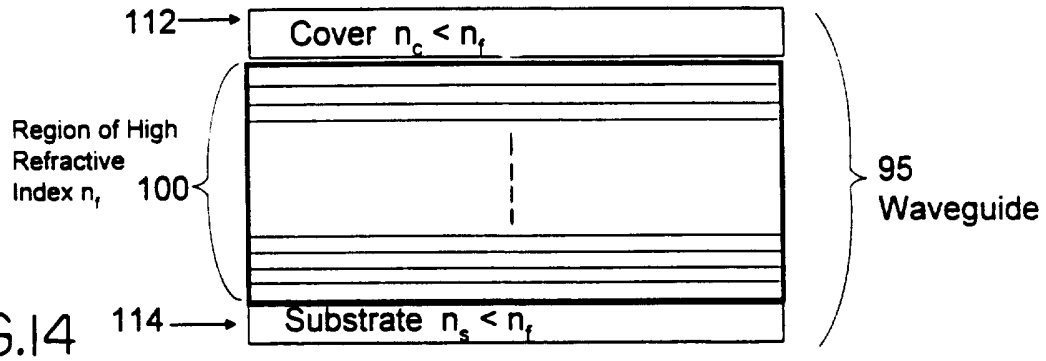

FIG.14

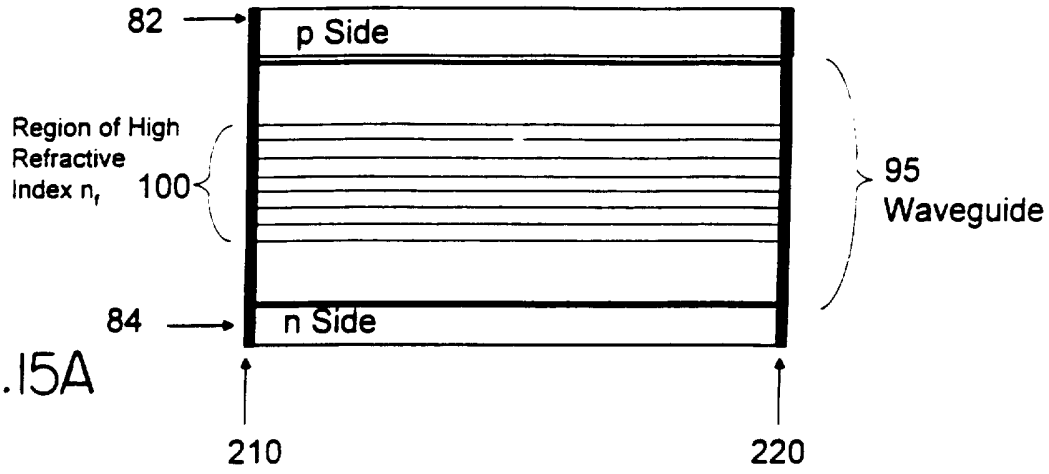

FIG.15A

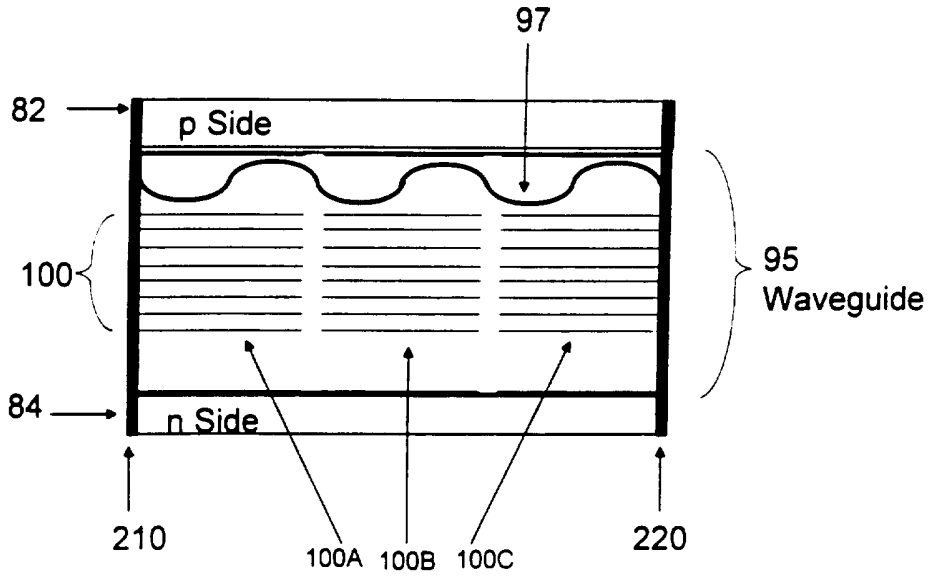

FIG.15B

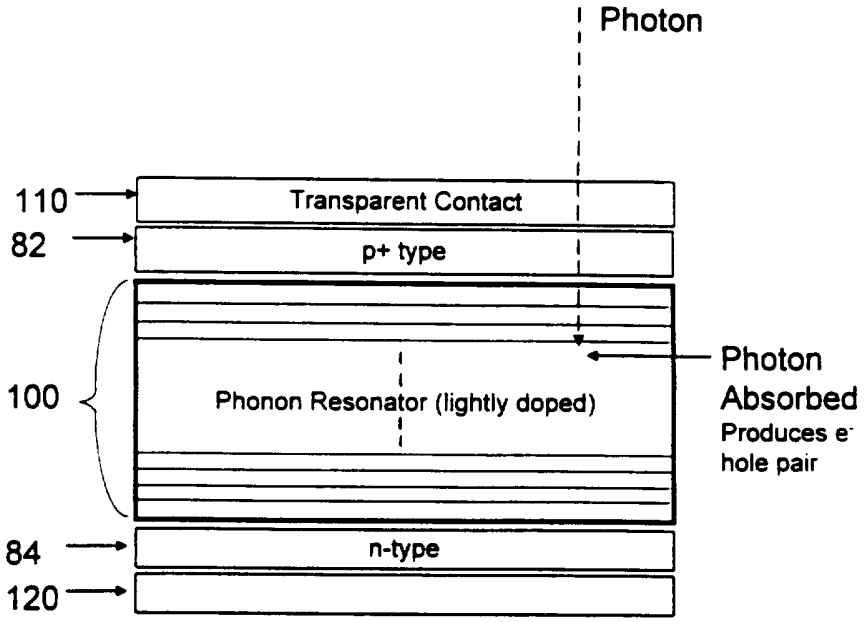

FIG. 17

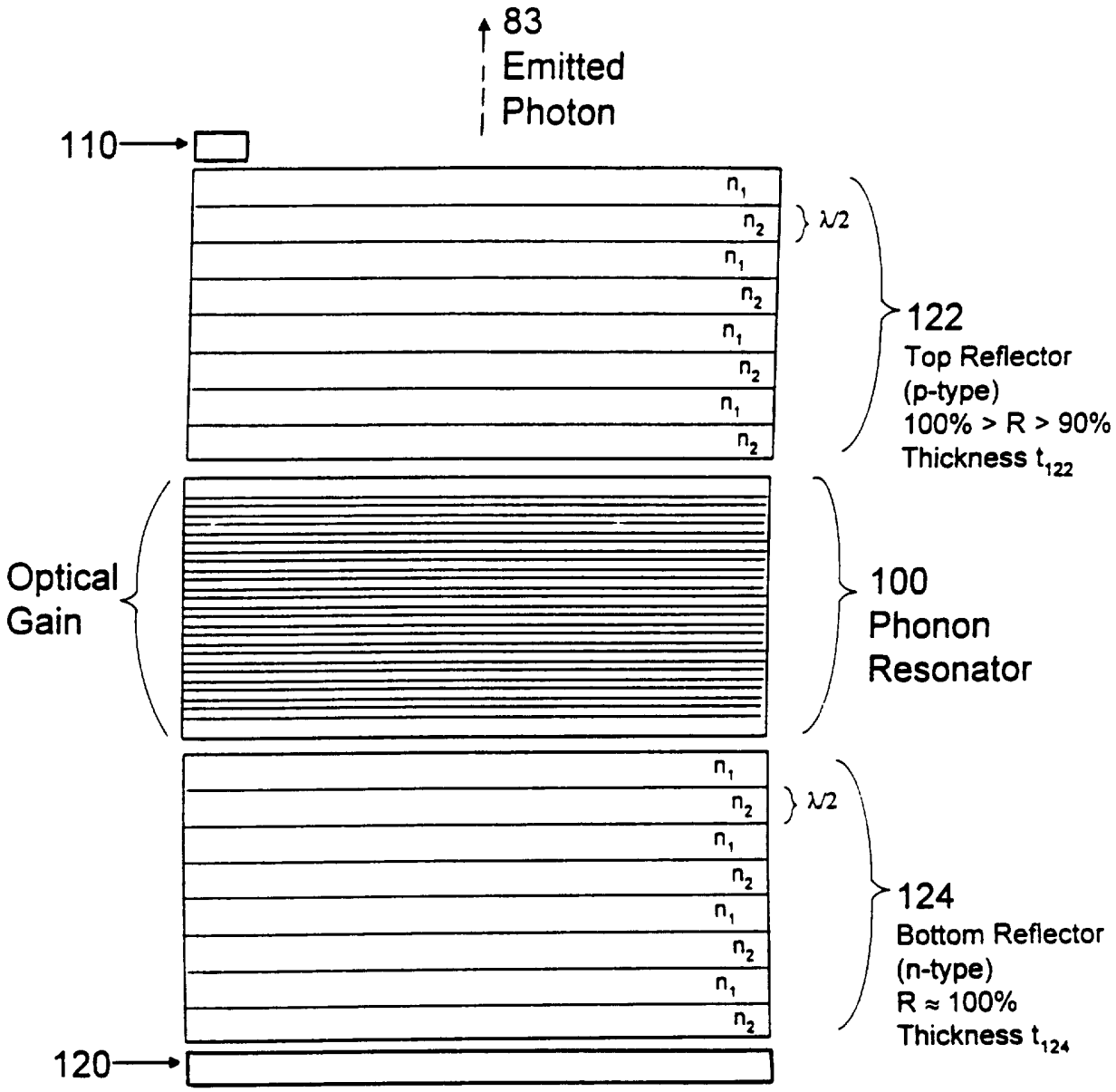
83
Emitted
Photon
110
n_1
n_2
λ/2
122
Top Reflector
(p-type)
100% > R > 90%
Thickness t_{122}
Optical
Gain
100
Phonon
Resonator
124
Bottom Reflector
(n-type)
R ≈ 100%
Thickness t_{124}
120

FIG. 16

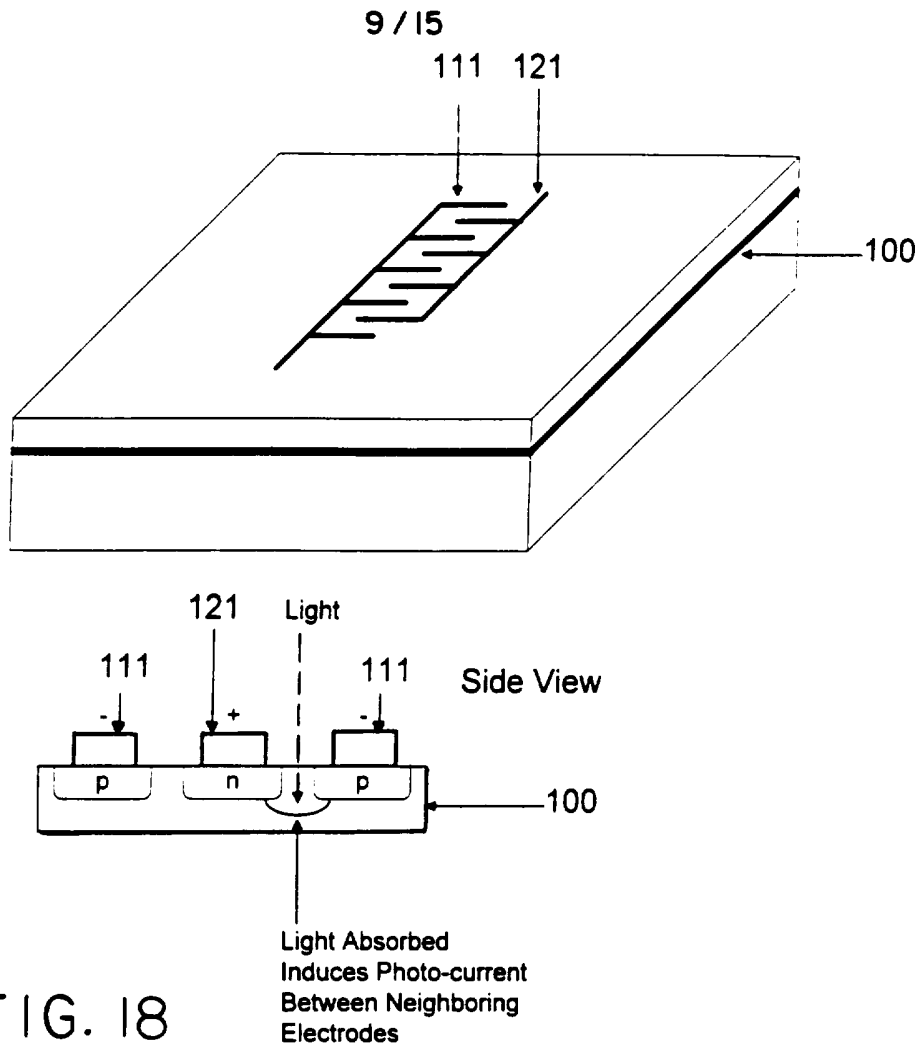
111
121
100
121
Light
111
111
Side View
-
+
-
p
n
p
100
Light Absorbed
Induces Photo-current
Between Neighboring
Electrodes

FIG. 18

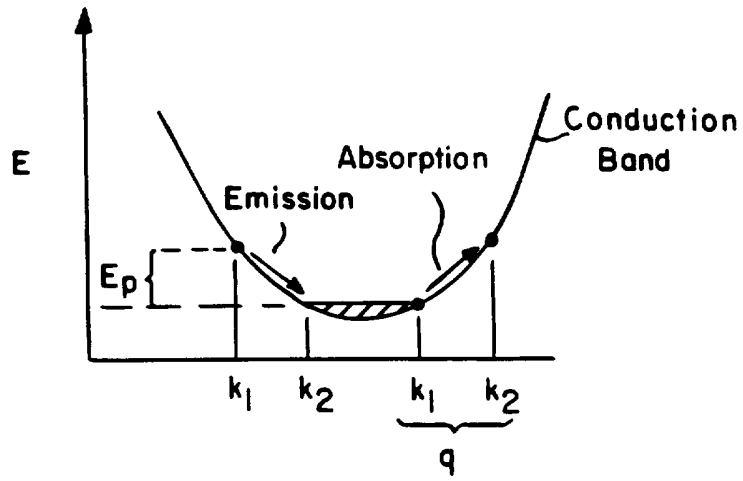
E
Conduction
Band
Absorption
Emission
E_p
k_1
k_2
k_1
k_2
q

FIG. 19

FIG. 20

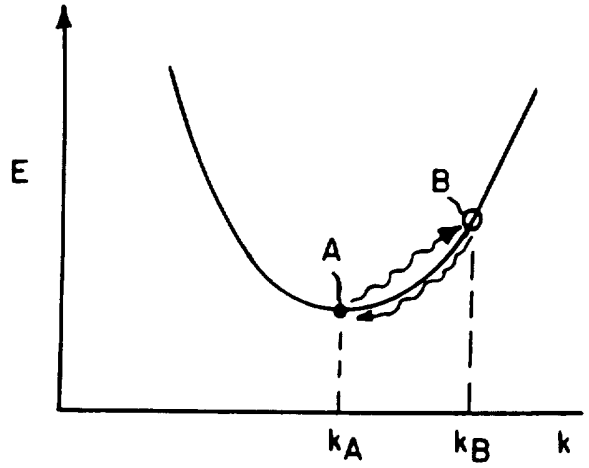

FIG. 21

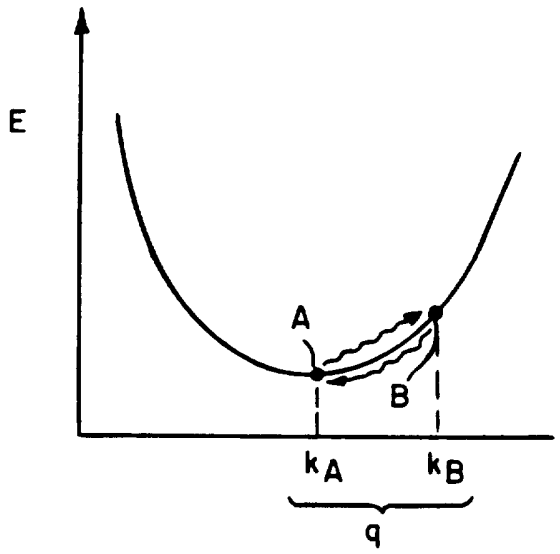

FIG. 22

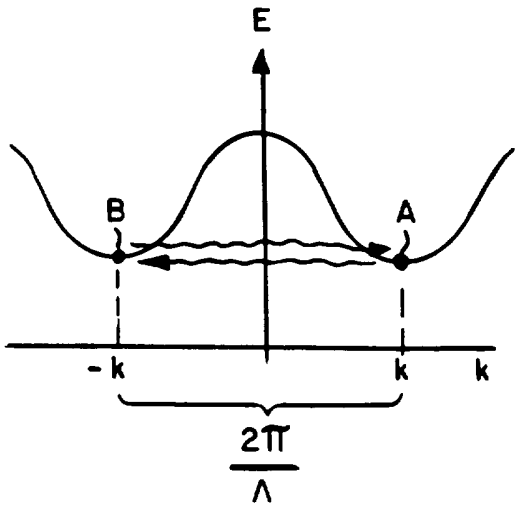

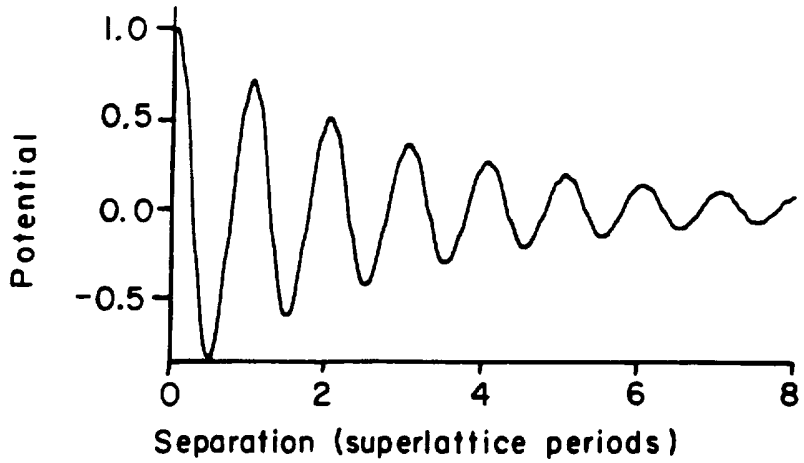
1.0
0.5
0.0
-0.5
Potential
0
2
4
6
8
Separation (superlattice periods)

FIG. 23

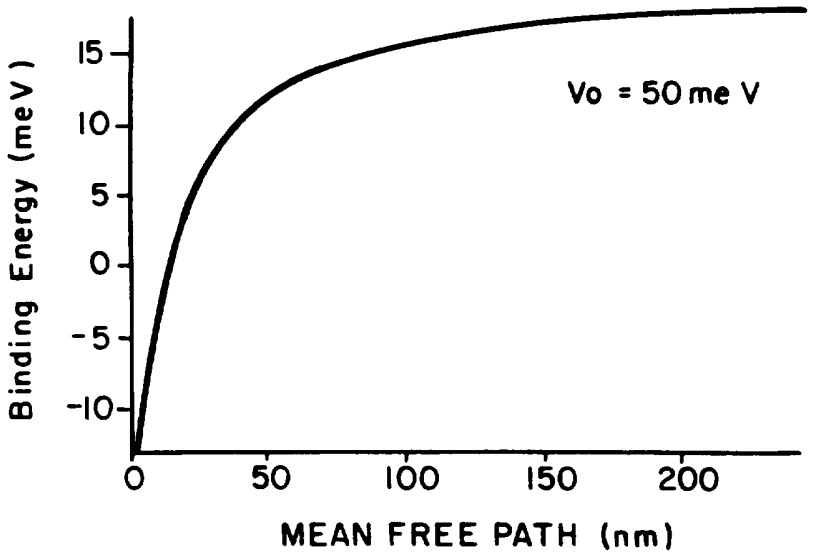
15
10
5
0
-5
-10
Binding Energy (meV)
Vo = 50 meV
0
50
100
150
200
MEAN FREE PATH (nm)

FIG. 24

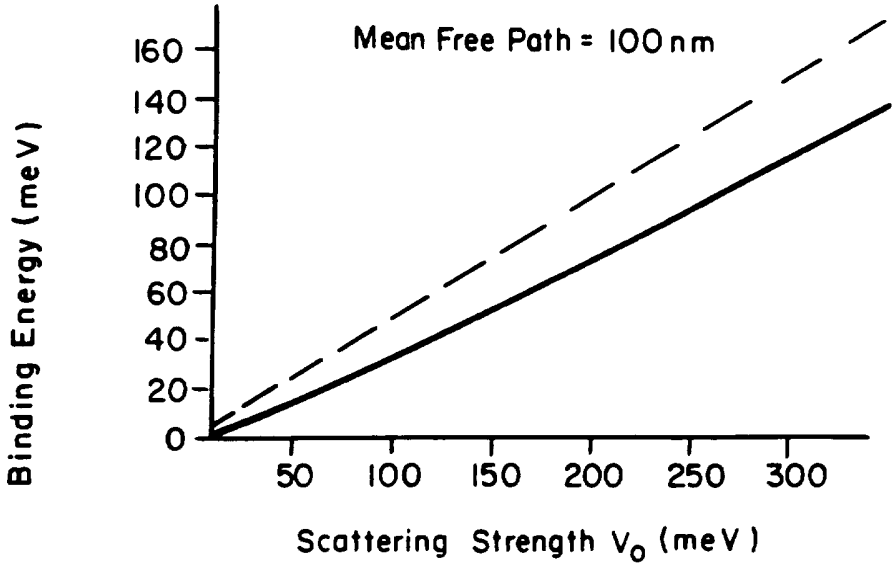

FIG. 25A

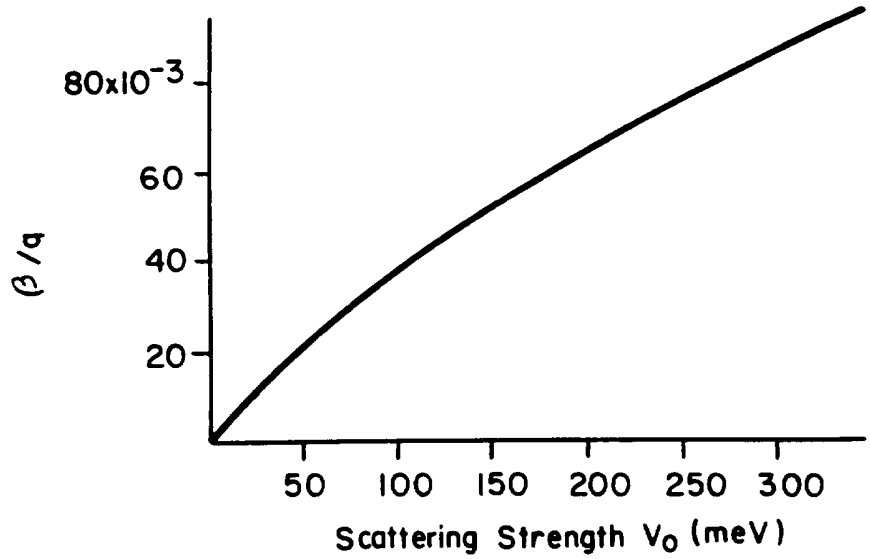

FIG. 25B

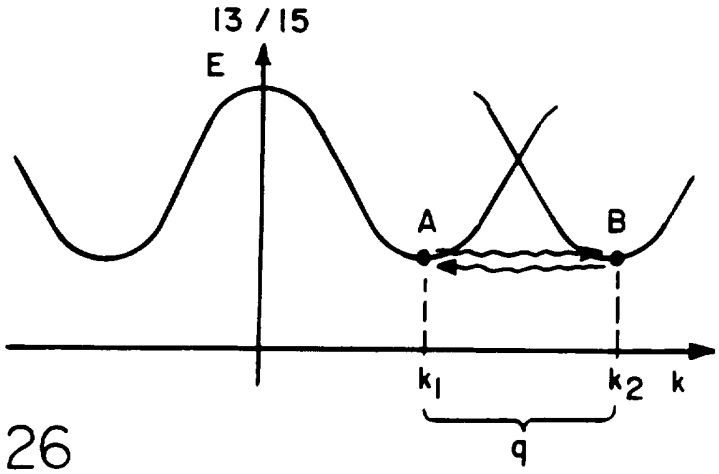

FIG. 26

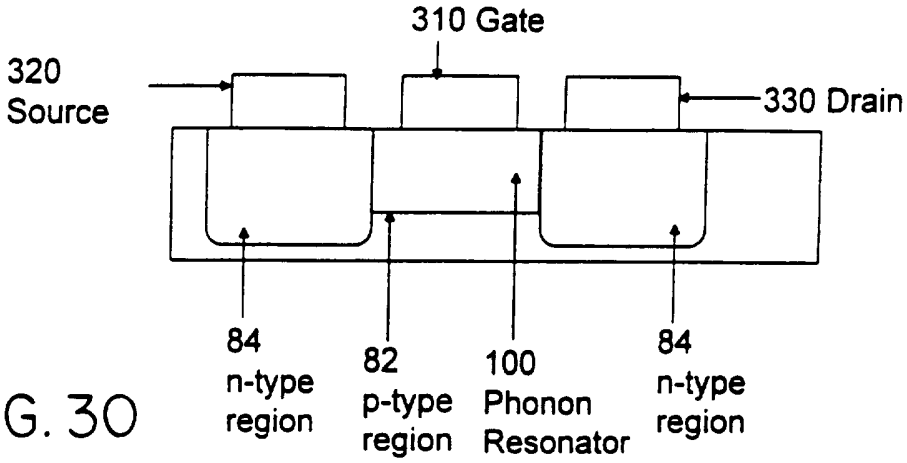

FIG. 30

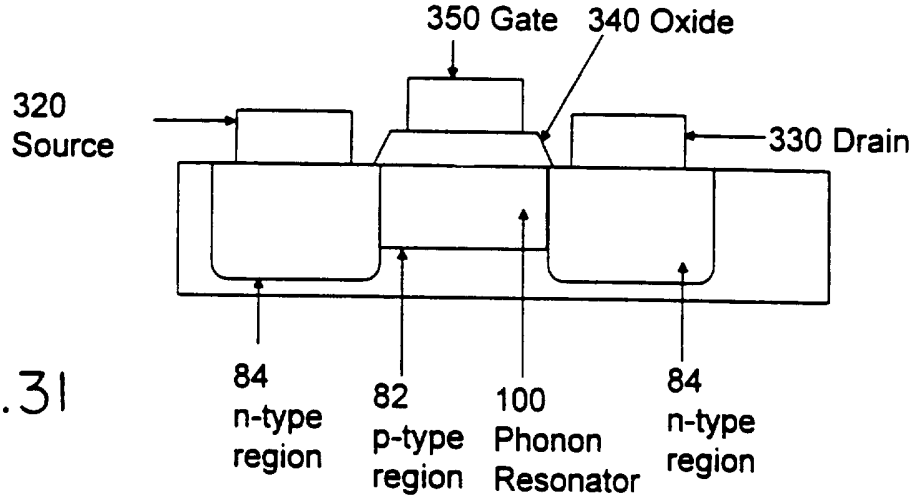

FIG. 31

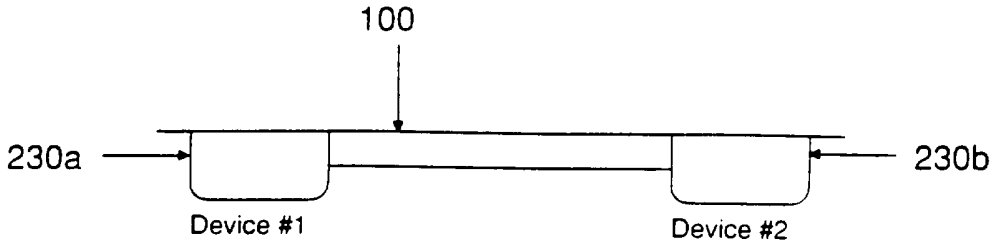

FIG. 27

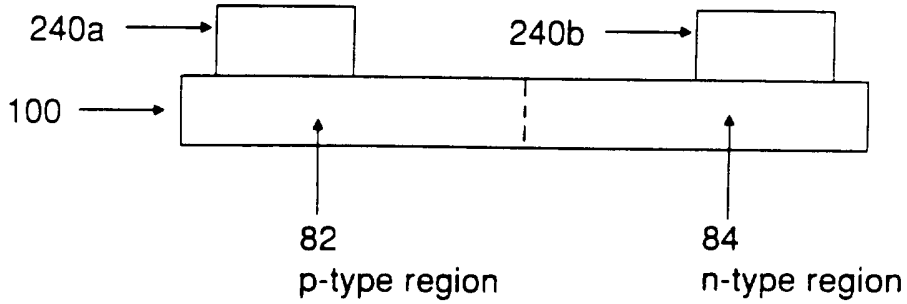

FIG. 28

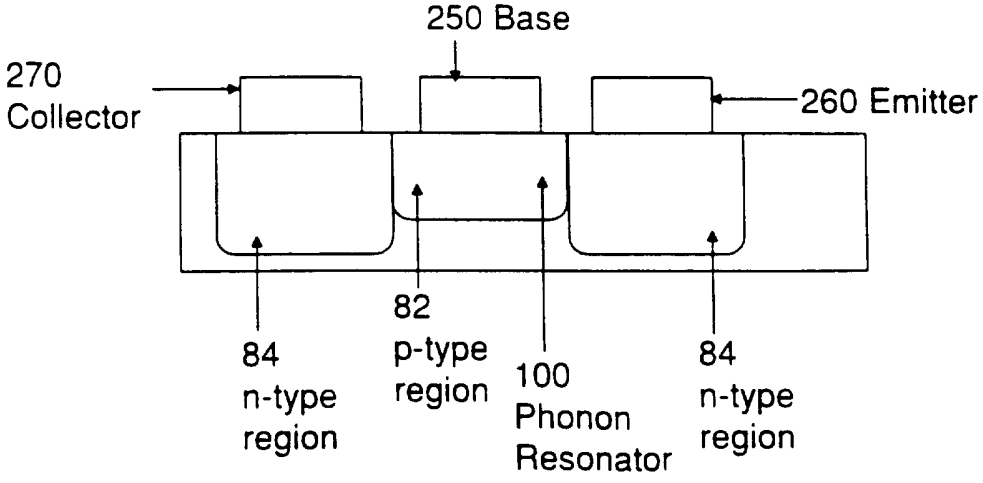

FIG. 29

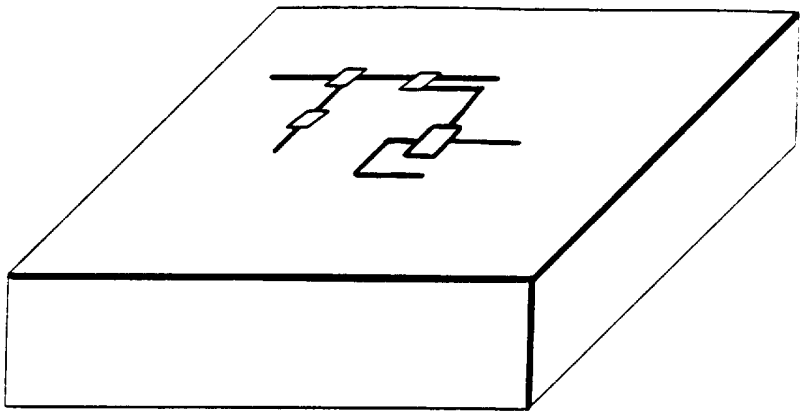

FIG. 32

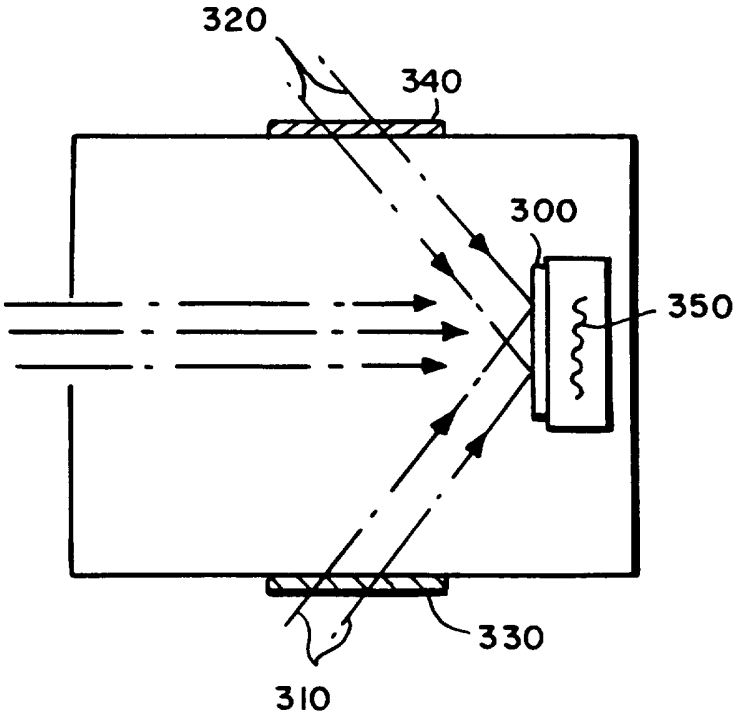

FIG. 33