Nov. 5, 1935. F. A. KOLSTER 2,019,611

HIGH FREQUENCY APPARATUS

Filed June 1, 1934

FIG. 1

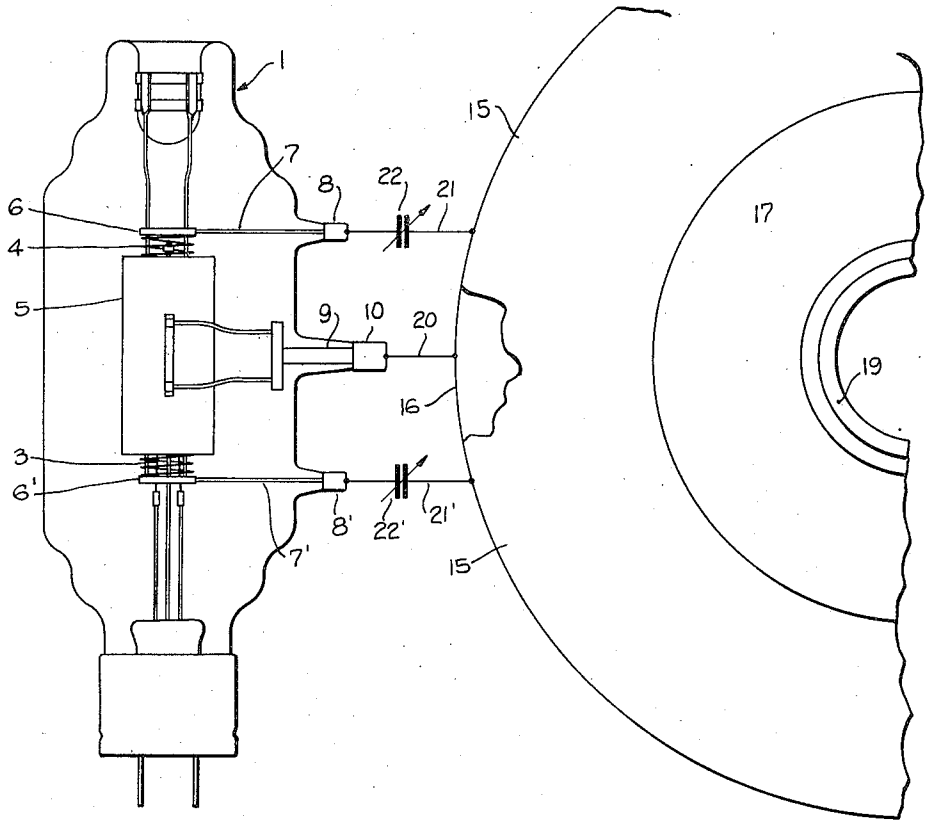

FIG. 2

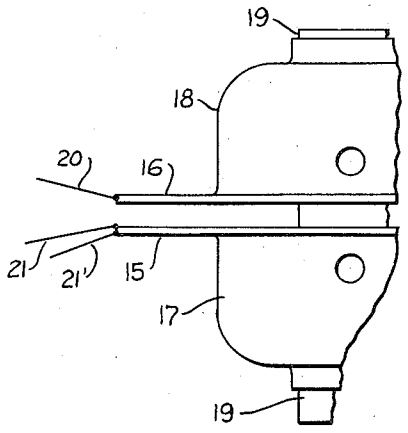

INVENTOR
Frederick A. Kolster
BY
R. C. Hopgood
ATTORNEY

Patented Nov. 5, 1935 2,019,611

UNITED STATES PATENT OFFICE

2,019,611

HIGH FREQUENCY APPARATUS

Frederick A. Kolster, New York, N. Y., assignor to Federal Telegraph Company, Newark, N. J., a corporation of California

Application June 1, 1934, Serial No. 728,554

5 Claims. (Cl. 250—36)

This invention relates to vacuum tube circuits and more particularly to such circuits for very high frequency working, such as frequencies having wavelengths below five meters.

An object of the invention is to reduce the troublesome inductance of the connecting leads, etc., between the apparatus and elements thereof in such circuits to high frequencies, thereby increasing the efficiency thereof.

The invention is particularly beneficial when applied to high frequency oscillation generators of the electron relay type. At such high frequencies the length of the conductors connecting the electrodes to the other apparatus in the circuits plays an important part in limiting the frequency of waves generated, the efficiency of the generator and the power developed thereby. The leads should, therefore, be as short as practicable.

According to one feature of this invention, where the condenser of the frequency determining, tank or flywheel circuit is connected between grid and anode of the electron relay, as in U. S. Patent No. 1,828,706 granted October 20, 1931, to Kolster and Kruesi, one terminal of the condenser is directly connected by a very short lead to the anode and the other terminal is connected by two short leads, preferably of equal electrical length, to opposite ends of the grid, or to two other points thereof electrically equi-distant from the point of connection of the other condenser terminal to the anode. By so connecting the tank circuit condenser to the grid and anode, the inductance of the connection, including the grid and anode, is very substantially reduced whereby the circuit connected in parallel to the tank circuit condenser is maintained capacitatively reactive and the flywheel action is maintained.

An embodiment of the invention is illustrated in the accompanying drawing, wherein

Fig. 1 is a side elevation diagrammatically illustrating an electron tube with the grid and anode thereof connected to the condenser of a tank circuit; and

Fig. 2 is a plan of a portion of the arrangement shown in Fig. 1.

As shown in the drawing, the invention comprises a three-electrode electron relay and a tank circuit condenser, connected in a novel manner.

The electron relay comprises an evacuated envelope containing concentrically disposed electrodes, namely, a cathode 3, a grid 4 and an anode 5, which may be supported in known manner. The opposite ends of the grid 4 are provided with collars or rings 6 connected by conductors 7 sealed in the glass envelope of the relay and joined to terminals 8. A conductor 9, sealed in an arm of the glass envelope, connects the anode 5 to the terminal 10.

The condenser, forming one element of a tank circuit of the type disclosed in Figs. 1, 2 or 3 of my copending application Ser. No. 637,564, filed October 12, 1932, comprises two spaced annular plates 15 and 16. These plates form the rims of two dome-shaped or cylindrical members 17 and 18 supported on a rod or tube 19 and adjustable along the length thereof to adjust the spacing of the condenser plates. The rod or tube 19 forms the inductance element of the tank or flywheel circuit and the cylindrical members 17 and 18 constitute means of very low resistance connecting the capacitance and the inductance elements in series in the tank or flywheel circuit.

One of the condenser plates, such as 16, is connected directly to anode terminal 10 by a very short conductor 20 of low resistance, while the other condenser plate 15 is connected to the grid terminals 8, 8' by low resistance leads 21, 21' containing adjustable blocking condensers 22, 22'.

The leads 21, 21' are shown connected to the condenser plate 15 at points thereon spaced substantially equi-distant from the point of connection of anode lead 20 to the condenser plate 16, but may be connected to the condenser plate 15 at one and the same point thereon. These leads 21, 21', with the respective blocking condensers 22, 22' and grid connecting conductors 7, 7', are preferably of equal electrical length for the high frequencies.

The collars 6, 6' are connected to the grid 4 at points thereon, so that the two paths from condenser plate 15 through the grid-anode space paths to the other condenser plate 16 are of equal electrical length for the high frequencies. Thus, the impedances of the leads from the condenser electrode or plate 16 to the grid 4 are such that the points of connection of the leads to the grid are of equal potential at the high frequency at which the apparatus is working.

Thus the arrangement of the leads from grid and anode to the plates of the tank circuit condenser is such that, to a large extent, the inductance thereof, which might affect the tank circuit, is greatly reduced.

Therefore, in accordance with the present invention not only is the length of the high frequency leads to grid and anode greatly reduced, but the inductance of the short leads employed is also reduced.

What is claimed is:

1. In high frequency apparatus, the combina-

tion of an electron relay having cathode, grid and anode, a tank circuit including a condenser, a lead connecting one terminal of the condenser and the anode, and two leads connected at one end to the other terminal of the condenser and having the other ends thereof connected to the grid at spaced points thereon electrically equidistant from the point of connection of said anode lead to said anode.

2. In high frequency apparatus, the combination of an electron relay having cathode, grid and anode, a tank circuit including a condenser, a lead connecting one terminal of the condenser and the anode, and two leads connected at one end to the other terminal of the condenser, the other ends of said two leads being connected to the grid at spaced points thereon such that two parallel paths of substantially equal electrical length for high frequency currents extend from said other plate of said condenser to said anode.

3. In high frequency apparatus, the combination of an electron relay having a cathode, a tubular grid surrounding the cathode and a tubular anode surrounding the grid, a tank circuit including a condenser, a lead connecting one terminal of the condenser to the anode, a lead connecting the other terminal of the condenser to one end of the grid, and a third lead connecting said other terminal of the condenser to the other end of said grid, the electrical length of said grid connecting leads being substantially equal.

4. In high frequency apparatus, the combination of an electron relay having a cathode, a tubular grid surrounding the cathode and a tubular anode surrounding the grid, a tank circuit including a condenser, a lead connecting one terminal of the condenser to the anode, a lead connecting the other terminal of the condenser to one end of the grid, and a third lead connecting said other terminal of the condenser to the other end of said grid, the electrical length of said grid connecting leads being substantially equal, and said grid connecting leads being connected to said other terminal of the condenser at spaced points thereon electrically equidistant from the point of connection of the anode lead to said one terminal.

5. In high frequency apparatus, the combination of an electron relay having cathode, grid and anode, a tank circuit including a condenser, a lead connecting one condenser electrode to said anode, and connections from the other condenser electrode to opposite ends of said grid, said connections being of such impedances that the points of connection thereof to said grid are of equal potential at the working high frequency.

FREDERICK A. KOLSTER.