July 11, 1939. G. H. BUDD 2,165,449

TREATMENT TENT

Filed Jan. 13, 1936

Fig. 1

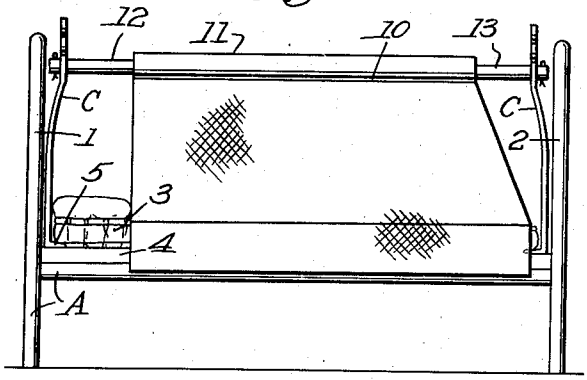

Fig. 2

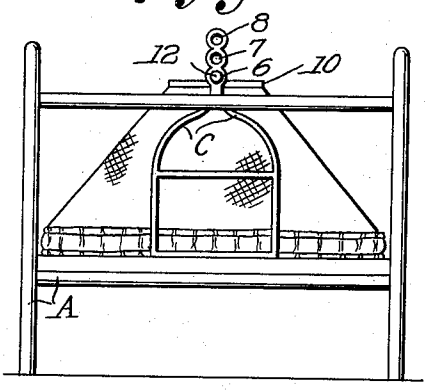

Fig. 3

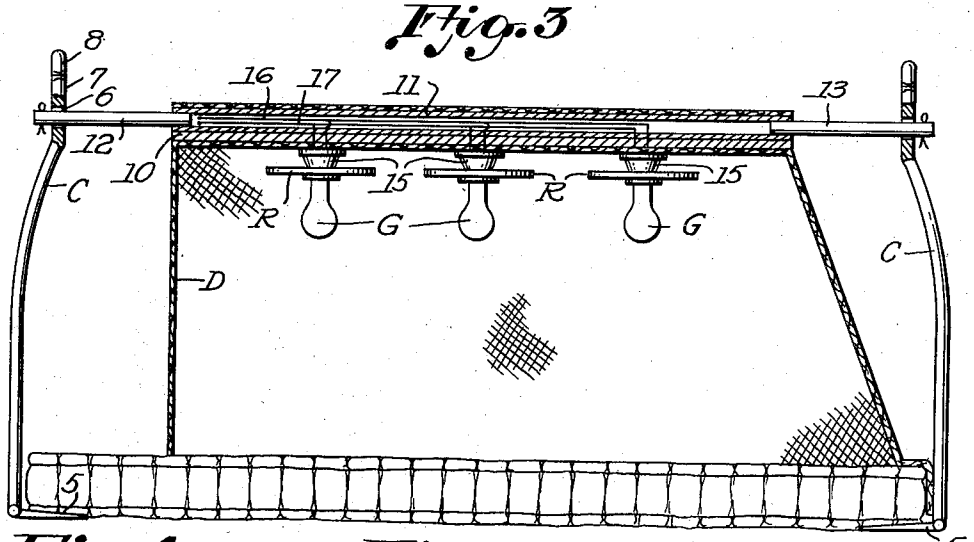

Fig. 4

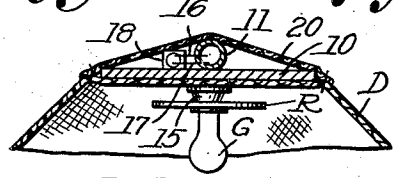

Fig. 6

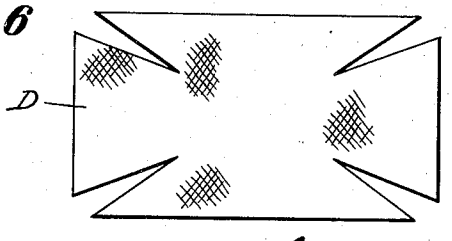

Fig. 5

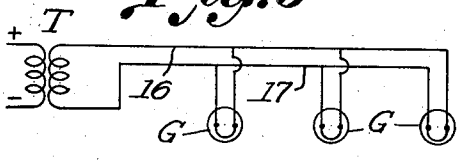

Inventor:
GEORGE H. BUDD

By R. M. Thomas

Attorney.

Patented July 11, 1939

2,165,449

UNITED STATES PATENT OFFICE

2,165,449

TREATMENT TENT

George H. Budd, Los Angeles, Calif.

Application January 13, 1936, Serial No. 58,849

1 Claim. (Cl. 128—396)

My invention relates to home treatments and has for its object to provide a new and efficient home beauty treatment which will give an even tan over the entire body without any burning or harmful drugs or oils being used and which when used as such will also give a therapeutic value by treating the nude body with ultra violet rays.

A further object is to provide a tent like structure adapted to be set up over the bed of the user and used either as a health aid or treatment or as a beauty treatment and which tent combines both reflected and direct ultra violet rays from electrically actuated globes emanating ultra violet rays.

A still further object is to provide a bed tent-like structure which will be easily set up or taken down and which is simple in construction and operation.

These objects I accomplish with the device illustrated in the accompanying drawing in which similar numerals and letters of reference indicate like parts throughout the several views and as described in the specification forming a part of this application and pointed out in the appended claim.

In the drawing in which I have shown the best and most preferred manner of building my invention,

Figure 1 is a side elevation of a bed with my apparatus set up for use thereon.

Figure 2 is an end view of Figure 1.

Figure 3 is a vertical longitudinal section of the device on a bed mattress shown on a larger scale.

Figure 4 is a section on line 4—4 of Figure 3.

Figure 5 is a diagrammatic view of the wiring used in the device.

Figure 6 is a plan view of the pattern on which the tent is cut.

In the drawing I have shown the bed as A, with the head 1 and foot 2 and the mattress shown as 3, resting on the springs 4. This particular type of device is made with vertical standards C at each end, said standards C being adapted to either be secured to the ends of the bed or to stand between the head and foot resting with a foot portion 5 extending between the springs and mattress a short distance. The top end of the standards C, which are alike in detail, is brought together in the middle and made to form three different loops or openings 6, 7, and 8, to provide for vertical adjustment of the tent-like structure of the invention. More or less loops or openings may be made as desired depending upon the amount of vertical raising or lowering desired.

The main body of the invention then is suspended from these standards and consists of a flat body or head piece 10 having a conduit 11 secured to the top side thereof. Said conduit is made open at each end to receive a short rod or pipe 12 in one end and 13 in the other end, said pipes 12 and 13 being then inserted into the openings 6, 7, or 8, as desired. I also provide holes in the rod or pipe through which pins may be passed to hold the pins solid between the standards C. This then forms the body and support for the device. On the under side of this head piece 10 I mount light globe sockets 15 and onto these sockets I secure reflectors R which in turn are backed by asbestos material to absorb the heat generated by the light globes, which has a tendency to ascend and the reflectors return both the heat and rays from the globe back down onto the bed. The conduit 11 carries the two wires 16 and 17 which furnish the electric energy for the light globes G which are screwed into the sockets. These globes may be of any kind desired including those globes which give off some degree of ultra violet rays. Onto the head end of the body plate 10 I mount a plug-in socket 18 to which the wires are connected and the plug-in socket is then provided with suitable wires to a source of electrical energy. When it is desired to use the device for therapeutic treatments, the wire from the socket is connected to a transformer T and then to a source of energy and the proper globes for this treatment are placed in the sockets 15.

As a cover D for this I then provide a tent-like closure consisting of fabric having the inner side covered with a reflective surface, such as may be made by spraying aluminum paint over suitable flexible material or such as might be made with very thin sheets of aluminum foil. This tent D is placed over the framework when set up on a bed. The tent has the lower end formed to fit the lower end of the bed and the head end is provided with a slot opening through which the person may enter the bed, or one side may be raised onto the body or head piece 10 to allow the person to enter the bed. This slot opening may be closed by a zipper or slide fastener of any of the well known varieties, if desired.

The tent-like structure may be made as shown in Figure 6 of the drawing by cutting away each corner in a triangular pie shaped segment and then sewing the edges together to form the

frusto-pyrimidal form of the tent. Each end is made alike and the head end is then split up the center and the slide fastener secured thereto. The head end may be used with the person's head within or without the tent-like structure, as he or she may desire.

The lower edges of the tent structure are weighted to hold them down when in use and the corners of the structure are not sewed together entirely, the outer ends are left free to tuck in around the corners of the mattress.

Having thus described my invention, I desire to secure by Letters Patent and claim:

In a device of the class described, the combination of a longitudinal flat body, having a tubular conduit along the top side thereof; pipes slid into each end of said body by which it is adjustably supported horizontally; head and foot support members formed with the top of each member carrying several openings through which the pipes may be inserted for vertical adjustment of the flat body; ultra violet ray lamps mounted on the under side of said body spaced from each end and from each other; means to introduce electrical energy to said globes; and a tent-like covering for said longitudinal body said covering having sufficient length and width to enclose a bed or like structure and having the inner surface of the covering made of reflecting material to concentrate the rays of light from the globes onto the body of the user.

GEORGE H. BUDD.