March 15, 1960 R. DUKE 2,928,180

BUTTON LOCKING DIVIDERS COMPASS

Filed Feb. 18, 1959

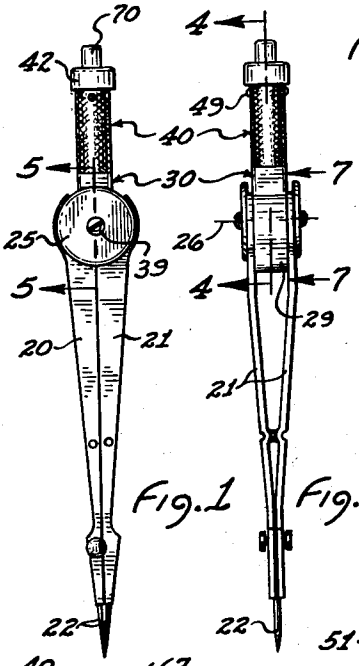

Fig. 1

Fig. 2

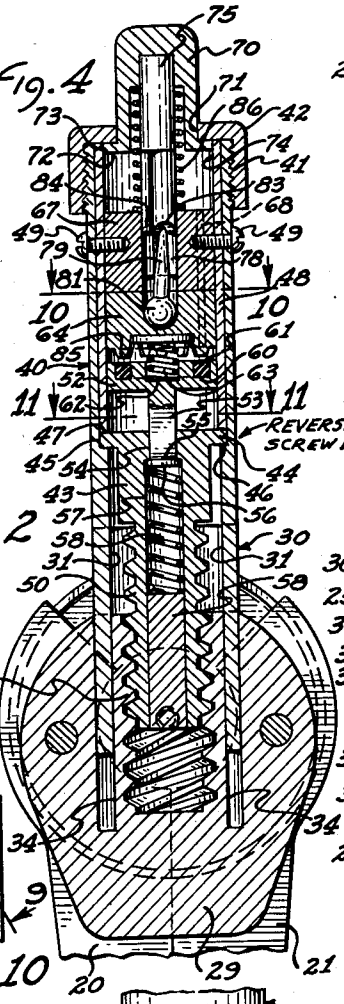

Fig. 3

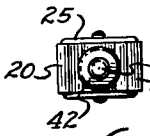

Fig. 12

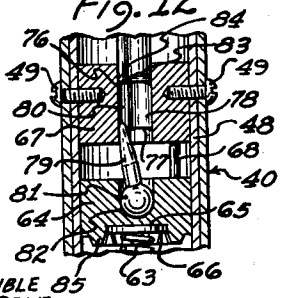

Fig. 5

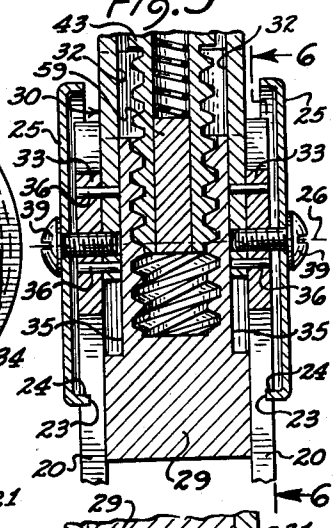

Fig. 9

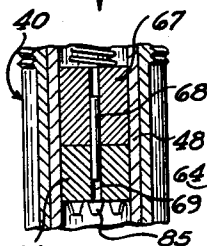

Fig. 10

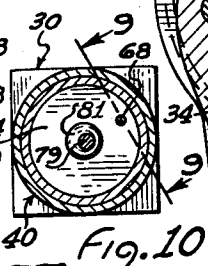

Fig. 6

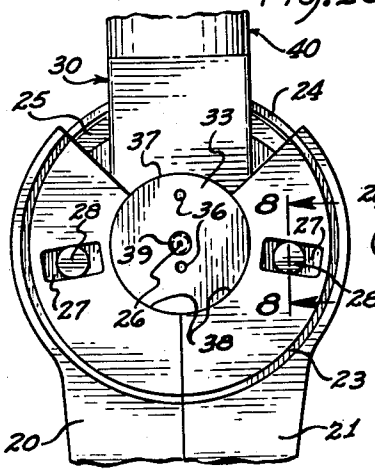

Fig. 7

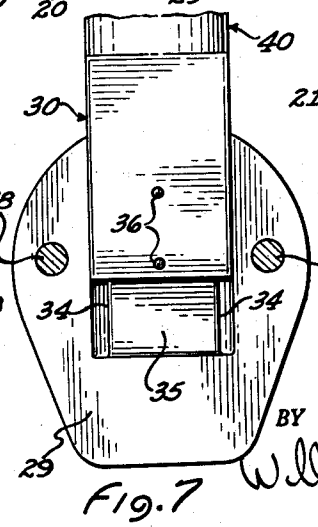

Fig. 8

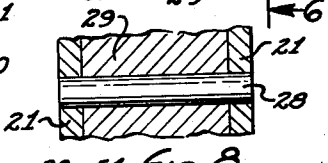

Fig. 11

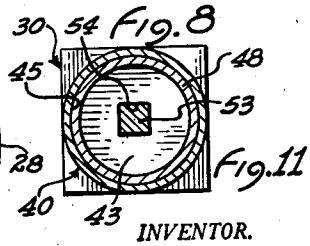

INVENTOR.
RONALD DUKE.
BY
William S. Brown
ATTORNEY.

United States Patent Office 2,928,180 Patented Mar. 15, 1960

2,928,180

BUTTON LOCKING DIVIDERS COMPASS

Ronald Duke, Phoenix, Ariz.

Application February 18, 1959, Serial No. 794,055

5 Claims. (Cl. 33—153)

This invention relates to instruments such as compasses, dividers, scribers and the like and is particularly directed to a button locking dividers compass.

One of the objects of this invention is to provide an improved means for retaining the legs of the instrument in adjusted position.

Another object is to provide a button locking device for a compass which is easy to adjust and fast to lock in adjusted position.

A further object of this invention is to provide a locking device for a compass such that when the legs are moved to desired position the user of the compass need only press the control button on top of the compass to instantly and securely lock the compass in adjusted position and then push the same button to release the compass for further adjustment.

Further features and advantages of this invention will appear from a detailed description of the drawings in which:

Fig. 1 is a front elevation of a compass incorporating the features of this invention.

Fig. 2 is a side elevation of the compass shown in Fig. 1.

Fig. 3 is a plan view of the compass shown in Figs. 1 and 2.

Fig. 4 is an enlarged fragmentary sectional view on the line 4—4 of Fig. 2.

Fig. 5 is an enlarged fragmentary sectional view on the line 5—5 of Fig. 1.

Fig. 6 is an enlarged fragmentary sectional view on the line 6—6 of Fig. 5.

Fig. 7 is an enlarged fragmentary sectional view on the line 7—7 of Fig. 2.

Fig. 8 is an enlarged fragmentary sectional view on the line 8—8 of Fig. 6.

Fig. 9 is an enlarged fragmentary sectional view on the line 9—9 of Fig. 10.

Fig. 10 is an enlarged fragmentary sectional view on the line 10—10 of Fig. 4.

Fig. 11 is an enlarged fragmentary sectional view on the line 11—11 of Fig. 4.

Fig. 12 is an enlarged fragmentary section similar to Fig. 4 but showing the device in locked position.

As an example of one embodiment of this invention there is shown a compass having the legs 20 and 21 on the lower ends of which are carried the usual points 22. On the enlarged top portion of each leg is formed the circular grooves 23 in which fits the lips 24 of the divider by covers 25 for play adjustment and which hold the upper ends of the legs 20 and 21 together to hinge about the common axis 26. Elongated radially disposed slots 27 are formed in the upper ends of the legs 20 and 21 and slidingly fit over the pivot pins 28 rigidly fixed in the divider leg platform 29. The lower outer housing 30, comprises a square tubular member having inside surfaces 31 and 32 respectively vertically slidable on mating surfaces 34 and 35 formed on the leg platform 29. Leg pivot posts 33 are rigidly secured to the lower housing

30 by suitable pins 36 and the peripheral surfaces 37 of the pivot posts 33 provide a bearing for the arcuate bearing surfaces 38 of the legs 20 and 21 of the compass. Truss screws 39 are threaded into the leg pivot posts 33 and the lower outer housing 30 for securing the divider leg covers with proper tension of their lips 24 in the grooves 23. By this arrangement swinging of the legs causes vertical reciprocation of the lower outer housing 30 on the guide surfaces 34 and 35 of the leg platform 29.

The upper end of the lower outer housing 30 is formed with a cylindrical upstanding portion 40 the top end of which is threaded at 41 to which is secured the button screw cap 42. A steep lead screw 43 is provided with a flange 44 on its upper end which is journaled in the bore 45 of the cylindrical portion 40 and is confined against axial movement by the abutment surface 46 in the bore 45 of the cylindrical portion 40 and the bottom end surface 47 of the inner housing sleeve 48 fixed in the bore 45 by suitable screws 49. The steep lead screw 43 has a suitable threaded portion 50 operating in the mating threaded nut portion 51 formed in the leg platform 29. A lower lock lug 52 has a downwardly extending square stem 53 slidable in a mating square bore 54 in the steep lead screw 43 and the lower end 55 of the stem 53 is engaged by a washer 56 axially movable in the bore 57 which also contains a compression spring 58 abutting the underside of the washer 56 and abutting at its lower end the plug 59 fixed in the bore 57 of the screw 43. In the upper surface of the lower locking lug 52 is formed an annular groove 60 in which is held a rubber locking ring 61 and centrally of the upper surface of the lower locking lug is a recess 62 in which is carried a compression spring 63.

Above the lower locking lug 52 is the upper locking lug 64 having downwardly projecting teeth 85 adapted to engage the rubber ring in 61 in the lower locking lug 52 and having a recess 65 containing a washer 66 engaged by the compression spring 63. Above the upper locking lug 64 is the button shaft guide collar 67 held in the bore 74 by the screws 49 and which has a pin 68 fixed therein extending downwardly and slidingly engaging in an aligned bore 69 in the upper locking lug 64 so as to prevent relative rotation while allowing axial movement of the upper locking lug with regard to the collar 67.

A push button 70 is axially slidable in the bore 71 in the cap 42 and has a flange 72 on its lower end with the periphery 73 thereof slidable in the bore 74 of the inner housing sleeve 48, both the lower and upper locking lugs 52 and 64 being axially slidable in the bore 74. The push button shaft 75 is rigidly fixed at its upper end in the push button 70 and extends downwardly into the bore 76 formed in the collar 67. The lower end 77 of the collar 67 is provided with a large hole 78 adapted to receive the full length of the locking pin 79, as shown in Fig. 4, and a smaller hole 80 adapted to only partly receive the length of the pin 79. The lower end of the pin 79 has a ball portion 81 thereon which is supported in a spherical socket 82 in the upper end of the upper locking lug 64. Suitable cam surfaces 83 and 84 on the lower end of the push button shaft 75 where it slides in the holes 78 and 80 cause the locking pin 79 to flip from one to the other of the holes 78 and 80 whenever the push button 70 is pressed.

In operation: When the legs 20 and 21 of the compass are spread and moved to desired position, the lower outer housing 30 and the reversible steep lead screw 50 will be moved relative to the divider leg platform 29 and its nut portion 51 causing the portion 43 lower locking lug 52 to be rotated through the square shaft 53 to a particular position for the leg setting. By locking the member 52 against rotation in that position the compass legs may be rigidly held in their adjusted position. This is

accomplished by pressing the push button **70** pushing the shaft **75** downwardly a sufficient distance to provide sufficient pressure of the teeth **85** on the rubber ring **61** and at the same time compressing spring **58**. When the locking pin **79** moves down a certain distance it flips out of the big hole **78** and into the smaller hole **80** locking the divider legs in desired position. The locking pin **79** is tapered to allow only a certain amount of the pin to enter the smaller hole **80**, Fig. 12. By again pressing the push button **70**, which is normally returned to initial position by the compression spring **86**, the locking pin is flipped back to the large hole **78** to release the teeth **85** from the rubber ring for further setting of the compass legs.

While the apparatus herein disclosed and described constitutes a preferred form of the invention, it is also to be understood that the apparatus is capable of mechanical alteration without departing from the spirit of the invention and that such mechanical arrangement and commercial adaptation as fall within the scope of the appendent claims are intended to be included herein.

Having thus fully set forth and described this invention what is claimed and desired to be obtained by United States Letters Patent is:

1. A button locking compass comprising a pair of pivotally hinged legs, a leg platform supporting said legs, a member movable on said leg platform and engaged by said legs to move in response to the movement of said legs, and means carried on said leg platform including an actuable push button for locking and releasing said means against movement relative to said leg platform.

2. A locking device for a compass having a pair of legs pivotally hinged together on a leg platform, a housing movable on said leg platform by the opening and closing of said legs, a lower locking member journaled on said housing and connected to said leg platform rotatable by the relative movement of said housing on said leg platform, and means on said housing for locking said rotatable member to said housing to thereby secure said legs in desired adjustable position.

3. In a locking device for a compass as set forth in claim 2 wherein said last mentioned means includes a push button in the top of said housing of the compass operable to alternately lock and release said rotatable member relative to said housing.

4. A lockable compass structure including a pair of legs, a leg platform pivotally supporting said legs, a housing movable on said leg platform, a pivotal connection between said housing and said legs whereupon movement of said legs effects relative movement of said housing and leg platform, a steep lead screw rotatable but confined against axial movement in said housing engaging mating steep lead treads in said leg platform so that relative movement of said platform and housing effects rotation of said screw, a locking lug axially movable relative to said housing and screw and rotatably driven by said screw, and means on said housing to lock said locking lug against rotation.

5. In a lockable compass structure as set forth in claim 4 wherein said last mentioned means includes a second locking lug movable into axially of said housing and locked against rotation therein by push button means in the upper end of the housing of said compass.

References Cited in the file of this patent

UNITED STATES PATENTS

533,819 Kleist ..... Feb. 5, 1895

FOREIGN PATENTS

178,912 Germany ..... Nov. 23, 1906