C. T. ALLCUTT.

VOLTAGE PROTECTIVE DEVICE.

APPLICATION FILED SEPT. 1, 1917.

1,361,800. Patented Dec. 14, 1920.

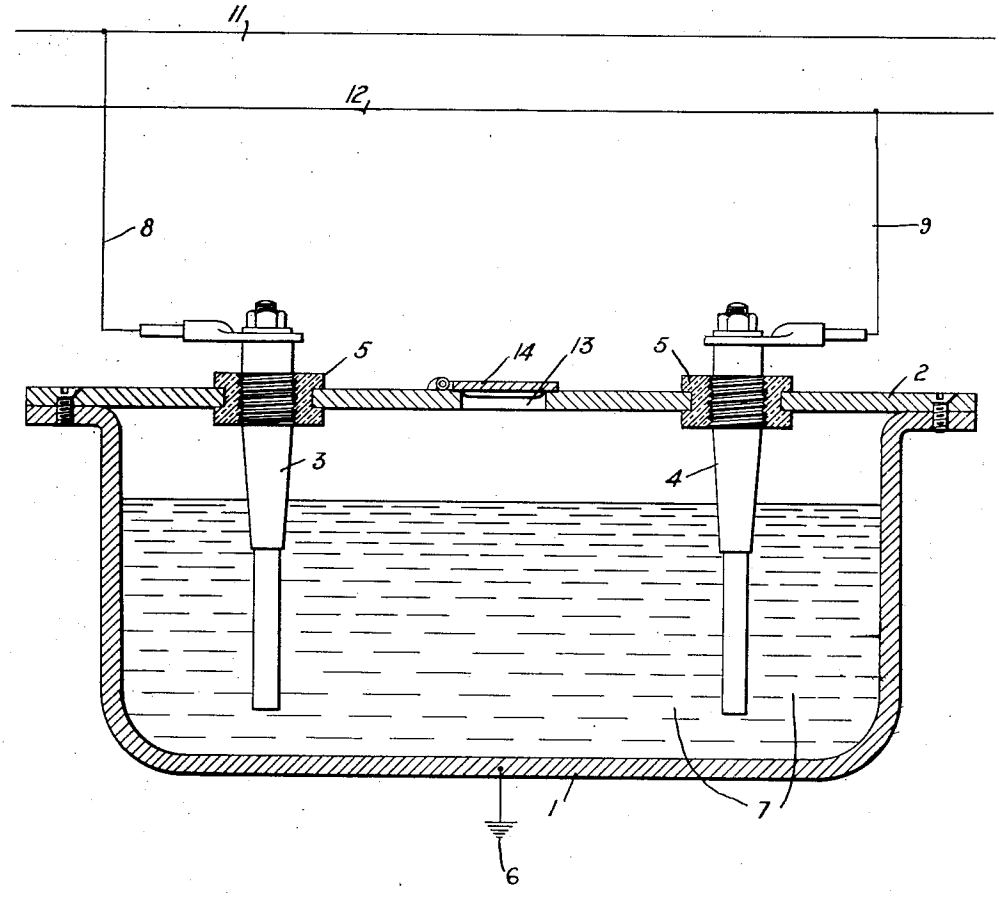

WITNESSES:

J. T. Wurmb.

F. A. Lind.

INVENTOR

Chester T. Allcutt.

BY

Wesley G. Carr

ATTORNEY

UNITED STATES PATENT OFFICE.

CHESTER T. ALLCUTT, OF WILKINSBURG, PENNSYLVANIA, ASSIGNOR TO WESTINGHOUSE ELECTRIC & MANUFACTURING COMPANY, A CORPORATION OF PENNSYLVANIA.

VOLTAGE-PROTECTIVE DEVICE.

1,361,800. Specification of Letters Patent. Patented Dec. 14, 1920.

Application filed September 1, 1917. Serial No. 189,343.

To all whom it may concern:

Be it known that I, CHESTER T. ALLCUTT, a citizen of the United States, and a resident of Wilkinsburg, in the county of Allegheny and State of Pennsylvania, have invented a new and useful Improvement in Voltage-Protective Devices, of which the following is a specification.

My invention relates to protective devices, and it has for its object to provide a lightning arrester which shall possess a low break-down voltage although the electrodes thereof are spaced a considerable distance from each other.

Heretofore, it has been customary, in constructing lightning arresters adapted for the service conditions to which the present invention is applicable, to separate the electrodes either in air or in a vacuum.

The objection to a vacuum-type arrester is that the vacuum is apt to become impaired while the arrester is in service, in which case, the protection which it affords will be eliminated without giving any warning that the apparatus is unserviceable. In an arrester having its electrodes spaced from each other in air, the electrodes must be very close together, which renders them liable to become bridged by small objects or particles, and an air gap of the size desired is mechanically difficult to obtain with any degree of accuracy and to maintain in service.

According to my invention, the electrodes may be spaced a considerable distance from each other, and their normal break-down voltage will be low. The single figure of the accompanying drawing is a sectional view of a lightning arrester embodying my invention.

A tank or receptacle 1 is provided with a cover 2 which supports electrodes 3 and 4 but is insulated therefrom by means of bushings 5. The receptacle 1 is composed of conducting material and is electrically connected to ground, as shown at 6. The spark gap is formed by the electrodes 3 and 4 and the container 1, and the latter contains a body of liquid 7 of low dielectric strength but of sufficiently good insulating properties to prevent excessive leakage from the low-voltage lines for which the arrester is particularly adapted. The liquid 7 may be an insulating liquid, such as oil, containing, in suspension, finely divided particles of a conducting material or a material having a relatively high specific inductive capacity. Oil, containing in suspension finely divided carbon or water, in an emulsified state, has been found particularly suitable. The electrodes 3 and 4 are separated from the receptacle 1 by the insulating liquid 7, and are connected, respectively, to conductors 8 and 9, which, in turn, are connected to lines 11 and 12, which are to be protected. The cover 2 of the receptacle, contains a vent or opening 13, which is provided with a cover or lid 14, so constructed as to permit the escape of any gases which may be formed within the receptacle and to prevent the entry of foreign particles.

When an excessive voltage is impressed upon the conductors 8 and 9 from the conductors 11 and 12, a current will flow through the electrodes 3 and 4, and across the gaps between them and the container 1 through the liquid 7, to ground 6. The resistance of this path is such that, when the voltage returns to its normal value, it will be unable to maintain the current set up by the excessive voltage.

While I have shown one form of my invention and have described, in detail, one application of the same, it will be obvious to those skilled in the art that it is not so limited but is susceptible of various minor changes and modifications without departing from the spirit thereof, and I desire, therefore, that only such limitations shall be placed thereupon as are imposed by the prior art or are specifically set forth in the appended claims.

I claim as my invention:

1. In an electrical protective device, a discharge path comprising a plurality of conducting particles of super-molecular size held in spaced relationship in suspension by a body of non-conducting liquid.

2. In electrical protective apparatus for preventing the maintenance of excess voltage between two conducting members, conductors connected to the respective members a body of non-conducting fluid in contact with said conductors, and a plurality of conducting particles of super-molecular size suspended in said fluid.

3. In electrical protective apparatus, the combination with a grounded conducting tank, of an electrode projecting thereinto

and connected to a line to be protected, and a body of non-conducting fluid in said tank and in contact with said electrode, said fluid body carrying a plurality of conducting bodies of super-molecular size in suspension.

4. A protective device comprising electrodes and a receptacle containing a body of oil having particles of refractory conducting material in suspension, and into which said electrodes project.

5. A protective device comprising electrodes and a receptacle containing a body of oil having carbon particles in suspension and into which said electrodes project.

6. In electrical protective apparatus for preventing the maintenance of excess voltage between two conducting members, conductors connected to the respective members, a body of non-conducting fluid in contact with said conductors, and a plurality of carbon particles of super-molecular size suspended in said fluid.

7. In electrical protective apparatus for preventing the maintenance of excess voltage between two conducting members, conductors connected to each of the respective members, a body of oil in contact with said conductors, and a plurality of carbon particles of super-molecular size suspended in said body of oil.

In testimony whereof, I have hereunto subscribed my name this 21st day of August, 1917.

CHESTER T. ALLCUTT.