US 20140010649A1

(19) United States

(12) Patent Application Publication

(10) Pub. No.: US 2014/0010649 A1

(43) Pub. Date: Jan. 9, 2014

Farah et al.

(54) MID-TURBINE FRAME HPT SEAL SUPPORT MESHING

(75) Inventors: **Jorge I. Farah**, Hartford, CT (US); **Shu Liu**, South Glastonbury, CT (US)

(73) Assignee: **UNITED TECHNOLOGIES CORPORATION**, Hartford, CT (US)

(21) Appl. No.: **13/544,229**

(22) Filed: **Jul. 9, 2012**

Publication Classification

(51) **Int. Cl.**

F01D 25/24 (2006.01)

F01D 25/00 (2006.01)

(52) **U.S. Cl.**

USPC **415/230**

(57) **ABSTRACT**

A seal support comprises a body, a seal carrier disposed circumferentially around an outer surface of the body, and a meshing ring extending axially forward of the seal carrier.

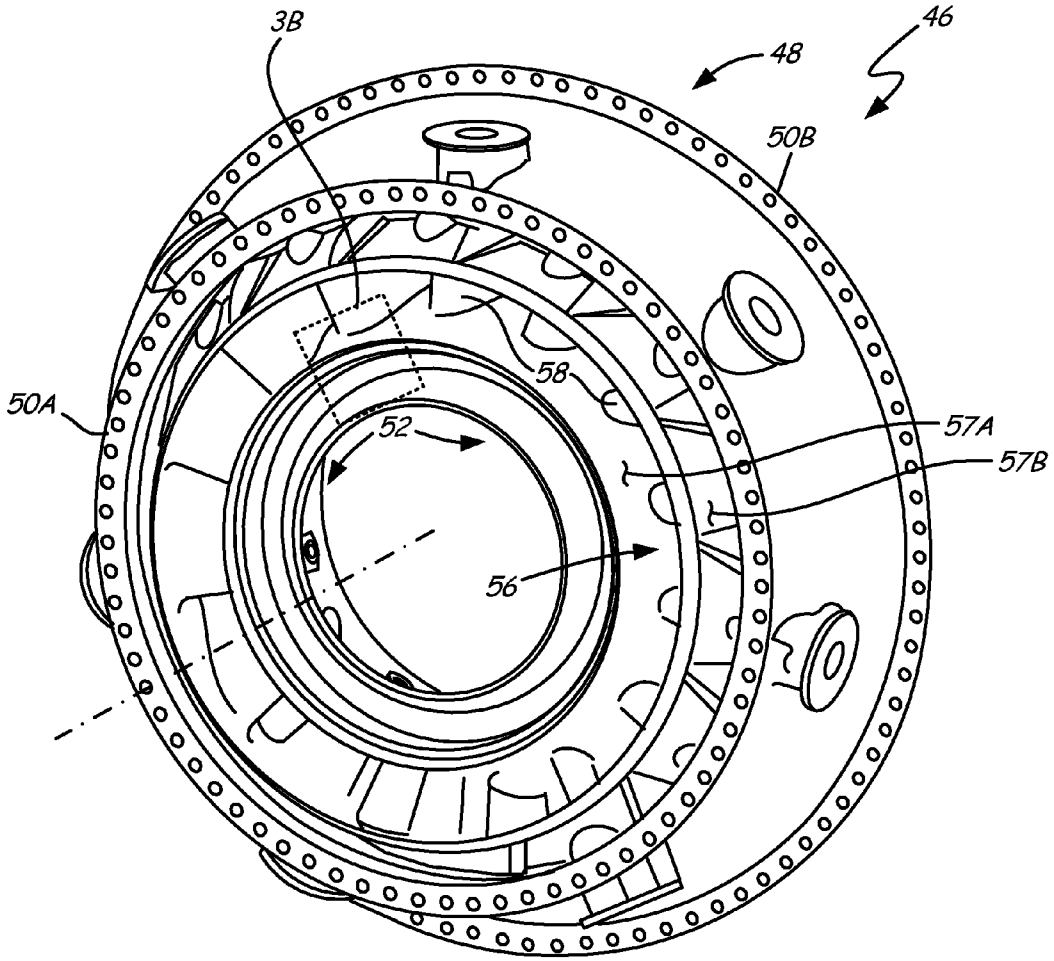

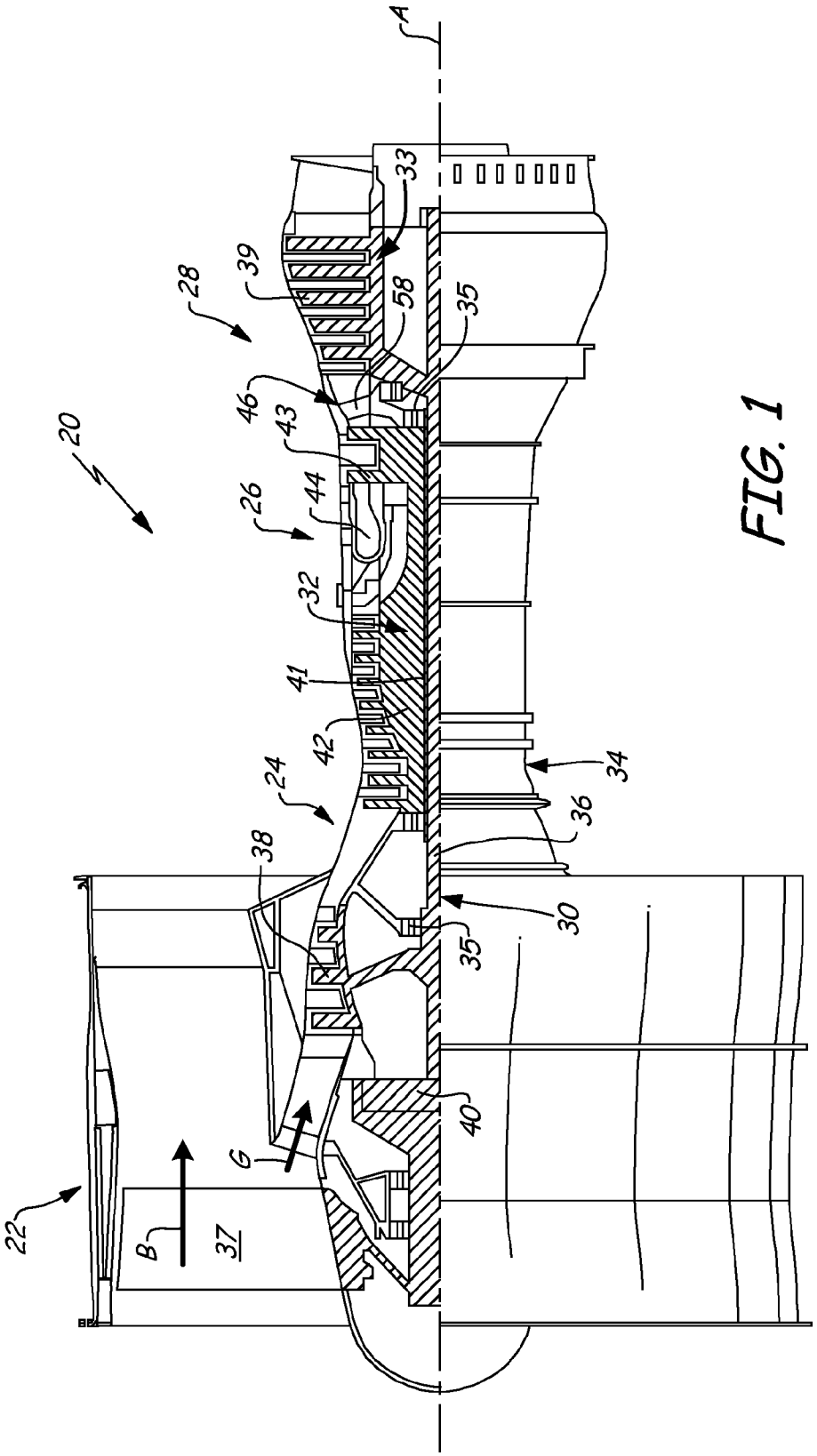

FIG. 1

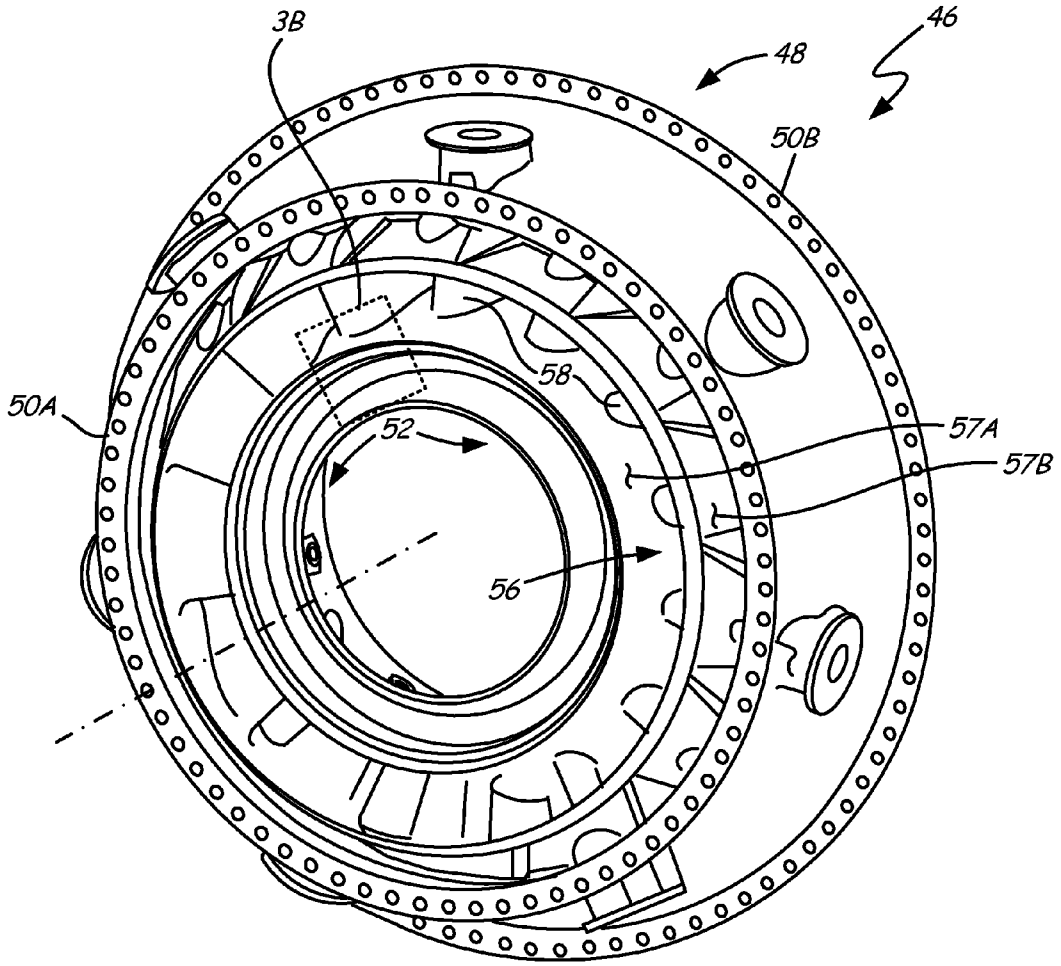

FIG. 2

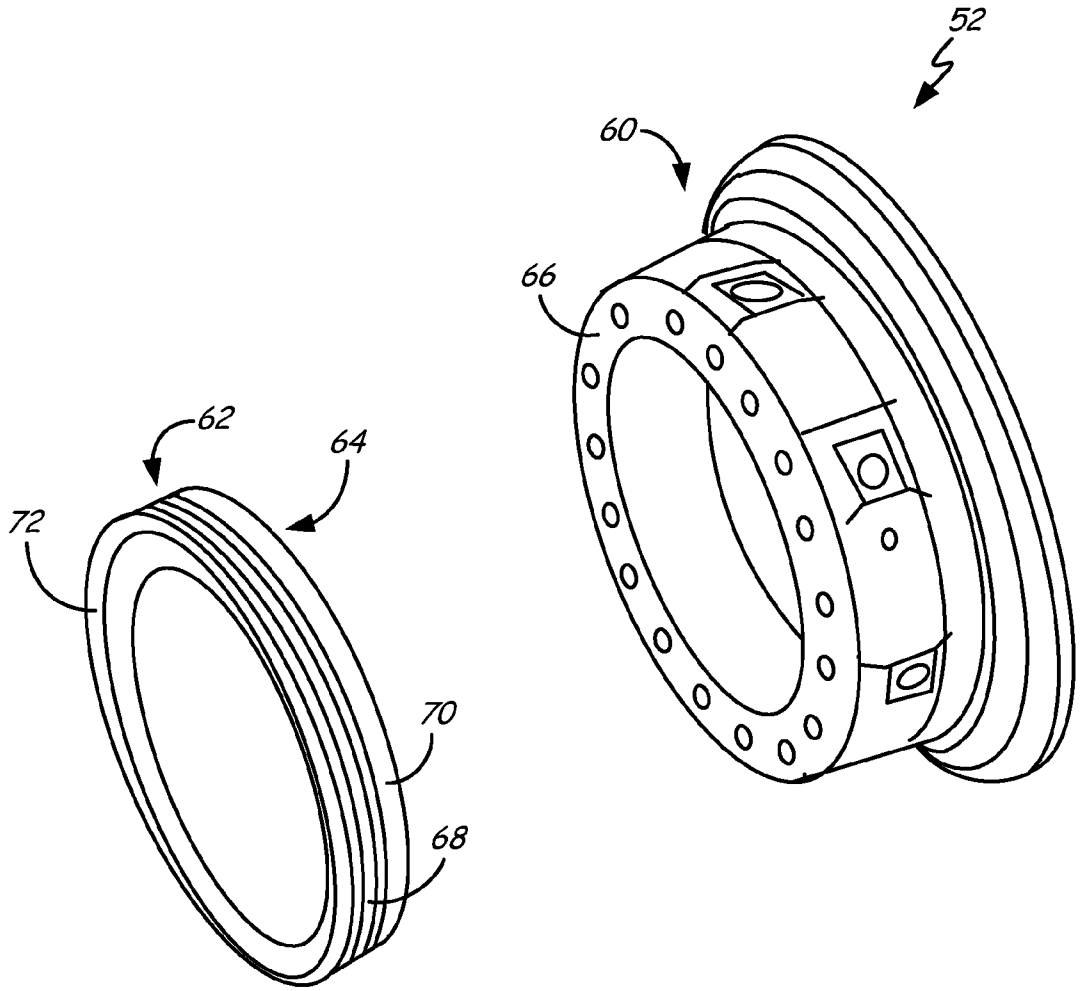

FIG 3A

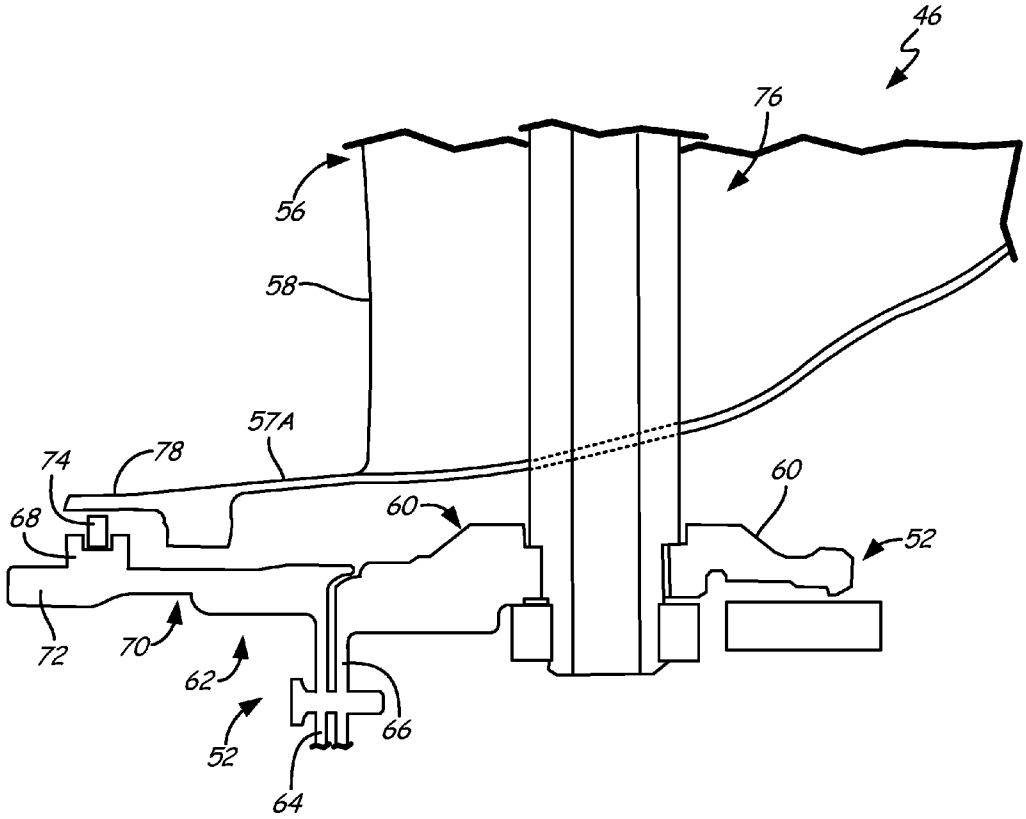

FIG. 3B

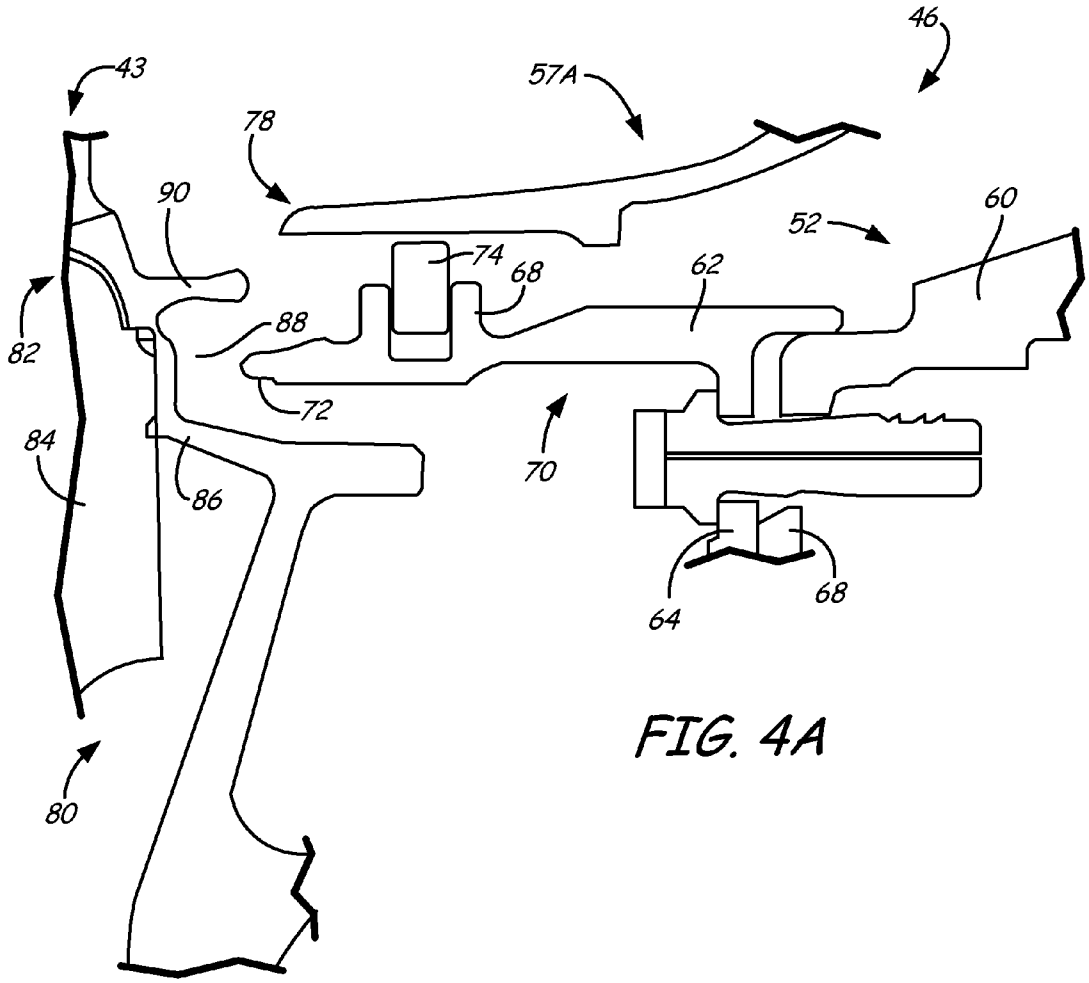

FIG. 4A

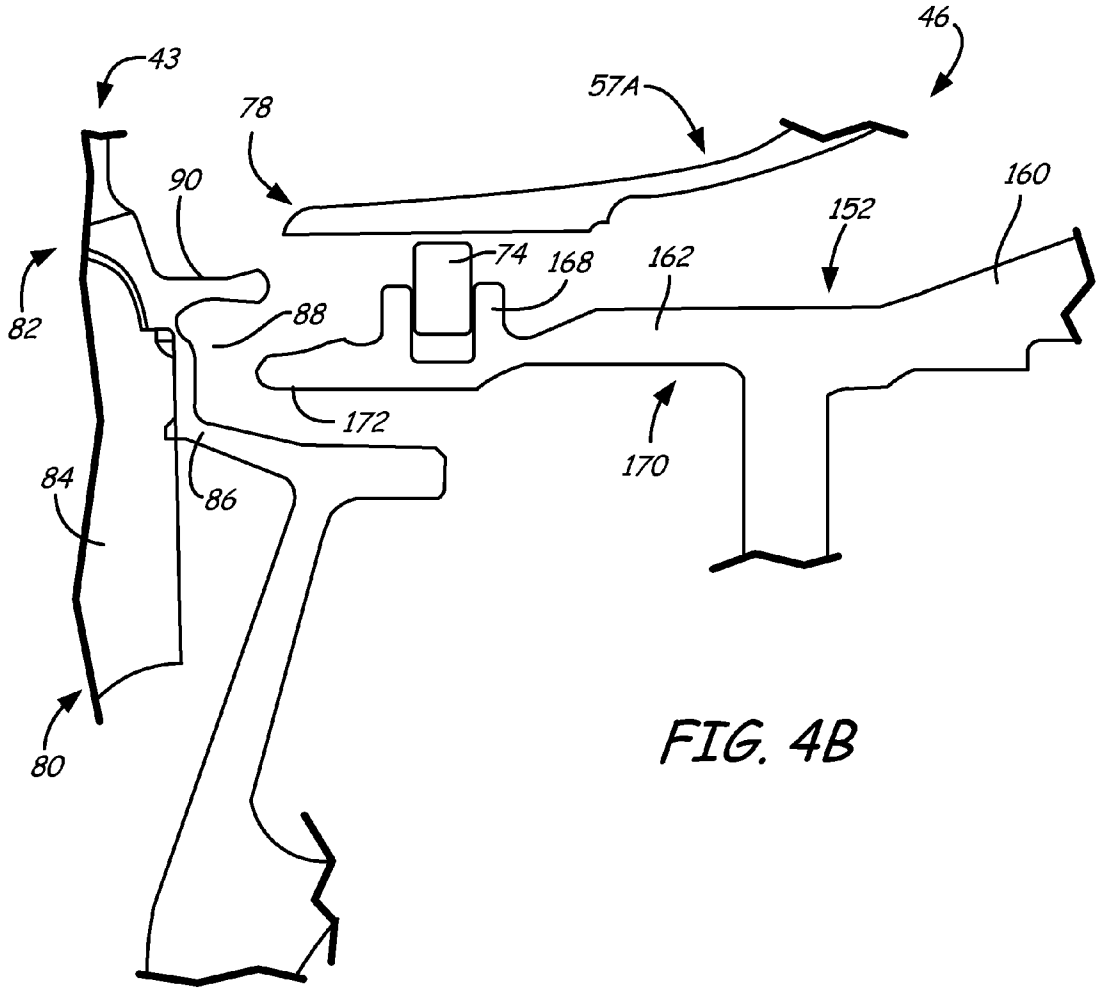

FIG. 4B

MID-TURBINE FRAME HPT SEAL SUPPORT MESHING

BACKGROUND

[0001] The described subject matter relates generally to gas turbine engines and more particularly, to arrangements for separating hot and cold flows in gas turbine engines.

[0002] Compact engines require closer packing of components, which in turn requires more crossing of hot and cold gas flows. Without adequate thermal protection, seals, and insulation between these flows, smaller engines suffer from a loss of efficiency. One system developed for certain engines is the mid-turbine frame (MTF), also known as the turbine center frame (TCF) or interturbine frame. This can be disposed between intermediate stages of the turbine section and can have numerous components serving a variety of functions, including bearing support, engine backbone, combustion gas flow path, among others.

[0003] These engine frames support axial, radial, and circumferential engine loads. In the event of a component failure in or proximate the MTF, the failure loads should be isolated or transmitted to other components to reduce the risk of catastrophic damage.

SUMMARY

[0004] A mid-turbine frame for a gas turbine engine comprises a radially outer case, a radially inner case, a plurality of load spokes, and a circumferential seal support. The radially inner case is disposed inward from the radially outer case defining an annular passage therebetween. The plurality of load spokes extend through the annular passage securing the outer case with the inner case. The circumferential seal support is disposed axially forward of the inner case, the seal support including a seal carrier and a meshing ring extending axially forward of the seal carrier.

[0005] A case assembly comprises a substantially cylindrical case element, and a circumferential seal support disposed axially forward of the inner case. The seal support includes a seal carrier and a meshing ring extending axially forward of the seal carrier.

[0006] A seal support comprises a body, a seal carrier disposed circumferentially around an outer surface of the body, and a meshing ring extending axially forward of the seal carrier.

BRIEF DESCRIPTION OF THE DRAWINGS

[0007] FIG. **1** is a schematic cross-sectional view of a turbofan gas turbine engine according to the present description.

[0008] FIG. **2** isometrically depicts an example embodiment of a mid-turbine frame for a gas turbine engine.

[0009] FIG. **3**A shows an exploded isometric view of an example inner case assembly for the mid-turbine frame depicted in FIG. **2**.

[0010] FIG. **3**B is a partially cut away cross-sectional view of the mid-turbine frame of FIG. **2**.

[0011] FIG. **4**A shows one embodiment of an inner case assembly relative to an adjacent turbine rotor stage.

[0012] FIG. **4**B shows an alternative embodiment of an inner case assembly relative to an adjacent turbine rotor stage.

DETAILED DESCRIPTION

[0013] FIG. **1** schematically illustrates an example gas turbine engine **20** that includes fan section **22**, compressor section **24**, combustor section **26** and turbine section **28**. Alternative engines might include an augmenter section (not shown) among other systems or features. Fan section **22** drives air along bypass flow path B while compressor section **24** draws air in along core flow path G where air is compressed and communicated to combustor section **26**. In combustor section **26**, air is mixed with fuel and ignited to generate a high pressure exhaust gas stream that expands through turbine section **28** where energy is extracted and utilized to drive fan section **22** and compressor section **24**.

[0014] Although the disclosed non-limiting embodiment depicts a turbofan gas turbine engine, it should be understood that the concepts described herein are not limited to use with turbofans as the teachings may be applied to other types of turbine engines; for example a turbine engine including a three-spool architecture in which three spools concentrically rotate about a common axis and where a low spool enables a low pressure turbine to drive a fan via a gearbox, an intermediate spool that enables an intermediate pressure turbine to drive a first compressor of the compressor section, and a high spool that enables a high pressure turbine to drive a high pressure compressor of the compressor section.

[0015] The example engine **20** generally includes low speed spool **30** and high speed spool **32** mounted for rotation about an engine central longitudinal axis A relative to an engine static structure **34** via several bearing systems **35**. It should be understood that various bearing systems **35** at various locations may alternatively or additionally be provided.

[0016] Low speed spool **30** generally includes inner shaft **36** that connects fan **37** and low pressure (or first) compressor section **38** to low pressure (or first) turbine section **39**. Inner shaft **36** drives fan **37** through a speed change device, such as geared architecture **40**, to drive fan **37** at a lower speed than low speed spool **30**. High-speed spool **32** includes outer shaft **41** that interconnects high pressure (or second) compressor section **42** and high pressure (or second) turbine section **43**. Inner shaft **36** and outer shaft **41** are concentric and rotate via bearing systems **35** about engine central longitudinal axis A.

[0017] Combustor **44** is arranged between high pressure compressor **42** and high pressure turbine **43**. In one example, high pressure turbine **43** includes at least two stages to provide a double stage high pressure turbine **43**. In another example, high pressure turbine **43** includes only a single stage. As used herein, a "high pressure" compressor or turbine experiences a higher pressure than a corresponding "low pressure" compressor or turbine.

[0018] The example low pressure turbine **39** has a pressure ratio that is greater than about **5**. The pressure ratio of the example low pressure turbine **39** is measured prior to an inlet of low pressure turbine **39** as related to the pressure measured at the outlet of low pressure turbine **39** prior to an exhaust nozzle.

[0019] Mid-turbine frame **46** of engine static structure **34** is arranged generally between high pressure turbine **43** and low pressure turbine **46**. Mid-turbine frame **46** further supports bearing systems **35** in turbine section **28** as well as setting airflow entering low pressure turbine **46**.

[0020] The core airflow G is compressed by low pressure compressor **38** then by high pressure compressor **42** mixed with fuel and ignited in combustor **44** to produce high speed exhaust gases that are then expanded through high pressure turbine **43** and low pressure turbine **46**. Mid-turbine frame **46** includes vanes **58**, which are in the core airflow path and function as an inlet guide vane for low pressure turbine **39**.

Utilizing vane **58** of mid-turbine frame **46** as the inlet guide vane for low pressure turbine **39** decreases the length of low pressure turbine **39** without increasing the axial length of mid-turbine frame **46**. Reducing or eliminating the number of vanes in low pressure turbine **39** shortens the axial length of turbine section **28**. Thus, the compactness of gas turbine engine **20** is increased and a higher power density may be achieved.

[0021] The disclosed gas turbine engine **20** in one example is a high-bypass geared aircraft engine. In a further example, gas turbine engine **20** includes a bypass ratio greater than about six (6), with an example embodiment being greater than about ten (10). The example geared architecture **40** is an epicyclical gear train, such as a planetary gear system, star gear system or other known gear system, with a gear reduction ratio of greater than about 2.3.

[0022] In one disclosed embodiment, gas turbine engine **20** includes a bypass ratio greater than about ten (10:1) and the fan diameter is significantly larger than an outer diameter of low pressure compressor **38**. It should be understood, however, that the above parameters are only exemplary of one embodiment of a gas turbine engine including a geared architecture and that the present disclosure is applicable to other gas turbine engines.

[0023] A significant amount of thrust is provided by bypass flow B due to the high bypass ratio. Fan section **22** of engine **20** is designed for a particular flight condition—typically cruise at about 0.8 Mach and about 35,000 feet. The flight condition of 0.8 Mach and 35,000 ft., with the engine at its best fuel consumption—also known as "bucket cruise Thrust Specific Fuel Consumption ('TSFC')"—is the industry standard parameter of pound-mass (lbm) of fuel per hour being burned divided by pound-force (lbf) of thrust the engine produces at that minimum point.

[0024] "Low fan pressure ratio" is the pressure ratio across the fan blade alone, without a Fan Exit Guide Vane ("FEGV") system. The low fan pressure ratio as disclosed herein according to one non-limiting embodiment is less than about 1.50. In another non-limiting embodiment the low fan pressure ratio is less than about 1.45.

[0025] "Low corrected fan tip speed" is the actual fan tip speed in ft/sec divided by an industry standard temperature correction of $[(T_{ram}\ ^\circ R)/518.7)^{0.5}]$. The "Low corrected fan tip speed", as disclosed herein according to one non-limiting embodiment, is less than about 1150 ft/second.

[0026] The example gas turbine engine includes fan **37** that comprises in one non-limiting embodiment less than about 26 fan blades. In another non-limiting embodiment, fan section **22** includes less than about 20 fan blades. Moreover, in one disclosed embodiment low pressure turbine **39** includes no more than about 6 turbine rotors schematically indicated at **33**. In another non-limiting example embodiment low pressure turbine **39** includes about 3 turbine rotors. A ratio between number of fan blades **37** and the number of low pressure turbine rotors is between about 3.3 and about 8.6. The example low pressure turbine **39** provides the driving power to rotate fan section **22** and therefore the relationship between the number of turbine rotors at **33** in low pressure turbine **39** and number of blades in fan section **22** disclose an example gas turbine engine **20** with increased power transfer efficiency.

[0027] FIG. **2** shows MTF **46**, and includes outer case **48**, outer case flanges **50**A, **50**B, inner case assembly **52**, vane pack **56**, inner vane pack wall **57**A, outer vane pack wall **57**B, and vanes **58**.

[0028] An example embodiment of MTF **46** has outer case **48** with axially opposed outer case flanges **50**A, **50**B for mounting MTF **46** to adjacent engine component cases (e.g., cases of HPT **43**, LPT **39**). Outer case **48** can also be radially secured to inner case assembly **52** to define an engine support frame. In one non-limiting example, a plurality of radially extending and circumferentially distributed load spokes (not visible in FIG. **2**) structurally join outer case **48** with inner case assembly **52**. A forward end of inner case assembly **52** can include one or more seal retention members as described below to provide at least some convective sealing proximate HPT section **43**, helping to isolate cold and hot gas flows through and around MTF **46**.

[0029] Vane pack **56** operates as a first stage inlet stator for LPT **39** as described above. MTF **46** can be alternatively arranged between other pairs of adjacent turbine stages. Vane pack **56** is shown here as having vanes **58** integrally formed monolithic inner and outer walls **57**A, **57**B. In certain embodiments, vanes **58** can be removably secured to one or both walls. Inner and outer walls **57**A, **57**B can alternatively be segmented. In embodiments with one or both inner and outer walls **57**A, **57**B being segmented, the segments may be joined together such as by brazing, welding, or other semi-permanent metal-joining processes. The joints may include seals or other features to minimize leakage between segments.

[0030] FIG. **3**A shows inner case assembly **52** and includes inner case element **60**, circumferential seal support **62**, aft seal support flange **64**, complementary case mounting surface **66**, seal carrier **68**, seal support body **70**, and meshing ring **72**.

[0031] FIG. **3**A shows an exploded version of one embodiment of inner case assembly **52**. Circumferential seal support **62** is disposed forward of inner case element **60**, and secured via aft seal support flange **64** or other suitable connecting means to a complementary mounting surface **66** at a forward end of inner case **60**. Circumferential seal support **62** includes at least one seal retention member, which in this example is represented by seal carrier **68** disposed circumferentially around an outer surface of seal support body **70**. Meshing ring **72** is disposed axially forward of seal carrier **68**. When installed as part of MTF **46**, meshing ring **72** extends axially toward a pocket formed in an adjacent turbine rotor assembly, which reduces the distance between the upstream turbine rotor assembly and the mid-turbine frame as shown in FIGS. **4**A-**4**B. In the event of failure of the rotor assembly, failure loads are preferentially directed axially through inner case assembly **52** to rather than through vane pack **56** or other more dangerous areas of MTF **46** as explained below.

[0032] The subject matter is described generally with respect to an inner case assembly with a separate inner case element removably securable to the circumferential seal support. In alternate embodiments, an example of which is shown in FIG. **4**B, the circumferential seal support can be integral with the inner case element. It should also be noted that circumferential seal support **62** may optionally include other features such as a flow discourager portion or other ancillary elements falling outside the scope of this disclosure.

[0033] FIG. **3**B shows a partial sectional view of a radially inner section of MTF **46**, and also includes inner case assembly **52**, vane pack **56**, inner vane pack wall **57**A, vanes **58**,

inner case element **60**, circumferential seal support **62**, aft seal support flange **64**, complementary case mounting surface **66**, seal carrier **68**, seal support body **70**, meshing ring **72**, piston ring seal **74**, spoke **76**, and vane pack forward end **78**.

[0034] The forward end of inner case assembly **52** can optionally be sealed to inner vane pack wall **57**A proximate HPT **43** (shown in FIG. **1**). In this example, seal carrier **68** is configured to retain piston ring seal **74**, which minimizes intrusion of combustion gases from HPT **43** into the cavity formed between vane pack **56** and inner case assembly **52**. However, the seal assembly may take any suitable alternative form depending on weight and sealing requirements. Vane pack **56** can include one or more hollow vanes **58** which also retain load spokes **76**. Spokes **76**, in certain embodiments are also hollow in order to provide cold section flow radially through MTF **46**. The aft end of MTF **46** may be similarly sealed (not shown) to direct combustion gases into LPT **39**. Alternatively, the connection and seal between MTF **46** and LPT **39** may take any other suitable form.

[0035] Meshing ring **72** extends forward from seal carrier **68**. Meshing ring **72** causes a forward end of inner case assembly to be disposed further forward than forward end **78** of vane inner vane pack wall **57**A. As seen below, meshing ring **72** can extend into a pocket formed into an aft portion of an axially adjacent rotor assembly, allowing circumferential seal support **62** to be mounted closer to a first turbine rotor located upstream of MTF **46** as compared to forward vane pack end **78**.

[0036] FIG. **4**A shows a forward portion of MTF **46** immediately downstream of final HPT stage **80**, and also includes inner case assembly **52**, inner vane pack wall **57**A, vane **58**, inner case element **60**, circumferential seal support **62**, aft seal support flange **64**, complementary case mounting surface **66**, seal carrier **68**, seal support body **70**, meshing ring **72**, piston ring seal **74**, vane pack forward end **78** turbine rotor **80**, rotor blade **82**, rotor blade root **84**, aft rotor disc **86**, pocket **88**, and aft turbine blade platform portion **90**.

[0037] FIG. **4**A includes inner case assembly with separate inner case element **60** and circumferential seal support **62** secured via respective flanges **68**, **66**. As shown above, meshing ring **72** extends forward from seal carrier **68** toward turbine rotor **80**, and is disposed further forward than inner vane pack forward end **78**. In this example, rotor **80** is the final stage of HPT **43** and includes rotor blade **82**, rotor blade root **84**, and aft rotor disc **86**. Turbine rotor **80** can alternatively be any other turbine rotor stage adjacent to a mid-turbine frame, interturbine frame, or similar system.

[0038] Meshing ring **72** extends into pocket **88** formed into an aft portion of turbine rotor **80**. Pocket **88** is formed by a radially outer portion of aft rotor disc **86** and an aft portion of turbine blade platform **90**. Meshing ring **72** causes a forward end of circumferential seal support **62** to be mounted closer to upstream turbine rotor **80** as compared to forward vane pack end **78**.

[0039] In the unlikely event of failure of turbine rotor **80**, at least some of turbine rotor **80** is pushed axially backward into MTF **46**. The failure load is then transmitted axially through inner case assembly **52** toward the forward rotor stage of LPT **39** (shown in FIG. **1**), located immediately downstream of MTF **46**. Meshing of HPT **43** and LPT **39** allows both rotor stages to come gradually to a stop with a minimum of catastrophic damage such as ruptured oil lines or bearing supports.

[0040] Other solutions for meshing of HPT **43** with LPT **39** have involved transmitting the axial failure load through an interturbine duct, such as vane pack **56**. However, there are several shortcomings to this approach which must be accounted for in designing other portions of the engine. For example, a rigid interturbine duct may successfully transmit the failure loads to the downstream turbine stage. However, this causes the duct to slide axially relative to support struts and fluid lines that may pass radially through hollow vanes in the interturbine duct. It has been suggested to move the interturbine duct forward such that the struts and fluid lines are not centered in the vane, but this can cause a weight and structural imbalance in the frame.

[0041] In contrast, meshing ring **72** engages with the rotor disc pocket **88** soon after failure, which begins to transmit the resultant loads without axially displacing vane pack **56** and the attendant risks thereof. In more severe failures, rotor disc **80** may still transmit some failure loads through vane pack **56**, but such loads are greatly reduced, requiring little or no forward displacement of vane pack **56** to protect the internal struts and fluid lines.

[0042] A separate circumferential seal support **62** can be manufactured from various resilient high-temperature nickel or cobalt alloys. The alloy used to form circumferential seal support **62** can optionally be manufactured to be more resilient as compared to inner case element **60**. In certain embodiments, circumferential seal support **62** can be configured to have a lower stiffness in a range between about 50% to about 80% of the attached inner case element stiffness, as measured by any suitable test or relevant industry standard. Lower seal support stiffness can be accomplished by forming seal support 62 from a structural alloy having a bulk modulus value in a range between about 50% to about 80% of the attached inner case element **60** bulk modulus. Alternatively, the seal support geometry can be tailored to provide a lower stiffness in a range between about 50% to about 80% of the stiffness of the complementary inner case element **60**. It will also be appreciated that both the structural alloy and its geometry can both be used in tandem to configure circumferential seal support **62** with a reduced stiffness as compared to complementary inner case element **60**. This can allow circumferential seal support **62** to preferentially deform without rupturing, absorbing some of the axial failure loads while reducing the total meshing load that must be transmitted axially toward LPT **39**.

[0043] In one illustrative but non-limiting example, the separate circumferential seal support may be cast or machined from nickel alloys such as those meeting the requirements of AMS 5663. Generally speaking, these are alloys containing about 15 wt % to about 23 wt % chromium, similar in composition to those sold commercially as Inconel® 718 and their equivalents. The alloy can then be heat treated above about 1725° F. (about 940° C.), according to the AMS 5663 specification to result in a bulk modulus at or above about 30 ksi (about 200 MPa). In contrast, in certain of these optional embodiments, inner case element **60** may be a different nickel alloy having a higher bulk modulus (e.g., at least about 45 ksi or about 300 MPa).

[0044] FIG. **4**B shows an alternative embodiment of inner case assembly **152** immediately downstream of final HPT stage **80**, and also includes inner vane pack wall **57**A, vane **58**, piston ring seal **74**, vane pack forward end **78**, turbine rotor **80**, rotor blade **82**, rotor blade root **84**, aft rotor disc **86**, pocket **88**, aft turbine blade platform portion **90**, circumferential seal

support portion **160**, inner case portion **162**, seal carrier **168**, seal support body **170**, and meshing ring **172**.

[0045] In this alternative example, inner case assembly **152** is integrally formed with inner case portion **160** and circumferential seal support portion **162**. Meshing ring **172** engages with the rotor disc pocket **88** in a manner similar to that described above with respect to FIG. **4**A. However, integral inner case assembly may be used to simplify the manufacturing process in applications where the expected meshing loads do not warrant the additional absorption of meshing loads provided by separate case and seal support elements.

[0046] While the invention has been described with reference to an exemplary embodiment(s), it will be understood by those skilled in the art that various changes may be made and equivalents may be substituted for elements thereof without departing from the scope of the invention. In addition, many modifications may be made to adapt a particular situation or material to the teachings of the invention without departing from the essential scope thereof. Therefore, it is intended that the invention not be limited to the particular embodiment(s) disclosed, but that the invention will include all embodiments falling within the scope of the appended claims.

Discussion of Possible Embodiments

[0047] The following are non-exclusive descriptions of possible embodiments of the present invention.

[0048] A mid-turbine frame for a gas turbine engine comprises a radially outer case, a radially inner case, a plurality of load spokes, and a circumferential seal support. The radially inner case is disposed inward from the radially outer case defining an annular passage therebetween. The plurality of load spokes extend through the annular passage securing the outer case with the inner case. The circumferential seal support is disposed axially forward of the inner case, the seal support including a seal carrier and a meshing ring extending axially forward of the seal carrier.

[0049] The mid-turbine frame of the preceding paragraph can optionally include, additionally and/or alternatively, any one or more of the following features, configurations and/or additional components.

[0050] A mid-turbine frame for a gas turbine engine according to an exemplary embodiment of this disclosure includes, among other possible things, a radially outer case, a radially inner case, a plurality of load spokes, and a circumferential seal support. The radially inner case is disposed inward from the radially outer case defining an annular passage therebetween. The plurality of load spokes extend through the annular passage securing the outer case with the inner case. The circumferential seal support is disposed axially forward of the inner case, the seal support including a seal carrier and a meshing ring extending axially forward of the seal carrier.

[0051] A further embodiment of foregoing mid-turbine frame, wherein the meshing ring extends axially toward a pocket formed in a first turbine rotor assembly, the first turbine rotor assembly disposed upstream of the mid-turbine frame.

[0052] A further embodiment of any of the foregoing mid-turbine frames, wherein the circumferential seal support is integral with the inner case assembly. A further embodiment of any of the foregoing mid-turbine frames, wherein the circumferential seal support is a separately formed seal support and is removably securable to a forward portion of the inner case. A further embodiment of any of the foregoing mid-turbine frames, wherein the seal carrier supports a piston ring seal engaging with an outer wall of a vane pack disposed in the annular cavity between the outer case and the inner case. A further embodiment of any of the foregoing mid-turbine frames, wherein the meshing ring is disposed closer to a first turbine rotor upstream of the mid-turbine frame as compared to an axial distance between a forward end of the vane ring and the turbine rotor immediately upstream of the mid-turbine frame. A further embodiment of any of the foregoing mid-turbine frames, wherein the meshing ring extends into a pocket formed at an aft end of the upstream turbine rotor.

[0053] A case assembly comprises a substantially cylindrical case element, and a circumferential seal support disposed axially forward of the inner case. The seal support includes a seal carrier and a meshing ring extending axially forward of the seal carrier.

[0054] The case assembly of the preceding paragraph can optionally include, additionally and/or alternatively, any one or more of the following features, configurations and/or additional components.

[0055] A case assembly according to an exemplary embodiment of this disclosure includes, among other possible things, a substantially cylindrical case element, and a circumferential seal support disposed axially forward of the inner case. The seal support includes a seal carrier and a meshing ring extending axially forward of the seal carrier.

[0056] A further embodiment of foregoing case assembly, wherein the circumferential seal support is integral with the inner case assembly.

[0057] A further embodiment of any of the foregoing case assemblies, wherein the circumferential seal support is a separately formed seal support and is removably securable to a forward portion of the inner case. A further embodiment of any of the foregoing case assemblies, wherein the circumferential seal support has a bulk modulus value lower than a bulk modulus value of the inner case. A further embodiment of any of the foregoing case assemblies, wherein the meshing ring is disposed axially adjacent to an adjacent turbine rotor upstream of the inner case assembly. A further embodiment of any of the foregoing case assemblies, wherein the meshing ring engages a pocket formed on an aft end of the adjacent turbine rotor. A further embodiment of any of the foregoing case assemblies, wherein the seal carrier is configured to support a piston ring seal in conjunction with a vane ring disposed radially adjacent to the case assembly.

[0058] A seal support comprises a body, a seal carrier disposed circumferentially around an outer surface of the body, and a meshing ring extending axially forward of the seal carrier.

[0059] The seal support of the preceding paragraph can optionally include, additionally and/or alternatively, any one or more of the following features, configurations and/or additional components.

[0060] A seal support according to an exemplary embodiment of this disclosure includes, among other possible things, a body, a seal carrier disposed circumferentially around an outer surface of the body, and a meshing ring extending axially forward of the seal carrier.

[0061] A further embodiment of the foregoing seal support, wherein the circumferential seal support is configured to have a stiffness value in a range between about 50% to about 80% of a stiffness value of a complementary inner case element. A further embodiment of any of the foregoing seal supports, wherein the seal support is formed integrally with an inner

case element. A further embodiment of any of the foregoing seal supports, wherein the meshing ring is disposed axially adjacent to an adjacent turbine rotor upstream of the seal support. A further embodiment of any of the foregoing seal supports, wherein the meshing ring engages a pocket formed on an aft end of the adjacent turbine rotor. A further embodiment of any of the foregoing seal supports, wherein the seal carrier is configured to support a piston ring seal in conjunction with a vane ring radially outward of the seal support.

1. A mid-turbine frame for a gas turbine engine, the mid-turbine frame comprising:

a radially outer case;

a radially inner case disposed inward from the radially outer case, the radially outer and inner cases defining an annular passage therebetween;

a plurality of load spokes extending through the annular passage securing the outer case with the inner case; and

a circumferential seal support disposed axially forward of the inner case, the circumferential seal support including a seal carrier and a meshing ring extending axially forward of the seal carrier.

2. The mid-turbine frame of claim **1**, wherein the meshing ring extends axially toward a pocket formed in a first turbine rotor assembly, the first turbine rotor assembly disposed upstream of the mid-turbine frame.

3. The mid-turbine frame of claim **1**, wherein the circumferential seal support is integral with the inner case assembly.

4. The mid-turbine frame of claim **1**, wherein the circumferential seal support is a separately formed seal support and is removably securable to a forward portion of the inner case.

5. The mid-turbine frame of claim **1**, wherein the seal carrier supports a piston ring seal engaging with an outer wall of a vane pack disposed in the annular cavity between the outer case and the inner case.

6. The mid-turbine frame of claim **5**, wherein the meshing ring is disposed closer to a first turbine rotor upstream of the mid-turbine frame as compared to an axial distance between a forward end of the vane ring and the turbine rotor immediately upstream of the mid-turbine frame.

7. The mid-turbine frame of claim **6**, wherein the meshing ring extends into a pocket formed at an aft end of the upstream turbine rotor.

8. A case assembly comprising:

a substantially cylindrical case element; and

a circumferential seal support disposed axially forward of the inner case, the seal support including a seal carrier and a meshing ring extending axially forward of the seal carrier.

9. The case assembly of claim **8**, wherein the circumferential seal support is integral with the inner case assembly.

10. The case assembly of claim **8**, wherein the circumferential seal support is a separately formed seal support and is removably securable to a forward portion of the inner case.

11. The case assembly of claim **10**, wherein the circumferential seal support has a bulk modulus value lower than a bulk modulus value of the inner case.

12. The case assembly of claim **8**, wherein the meshing ring is disposed axially adjacent to an adjacent turbine rotor upstream of the inner case assembly.

13. The case assembly of claim **12**, wherein the meshing ring engages a pocket formed on an aft end of the adjacent turbine rotor.

14. The case assembly of claim **8**, wherein the seal carrier is configured to support a piston ring seal in conjunction with a vane ring disposed radially adjacent to the case assembly.

15. A seal support comprising:

a substantially cylindrical body;

a seal carrier disposed circumferentially around an outer surface of the body; and

a meshing ring extending axially forward of the seal carrier.

16. The seal support of claim **15**, wherein the circumferential seal support is configured to have a stiffness value in a range between about 50% to about 80% of a stiffness value of a complementary inner case element.

17. The seal support of claim **15**, wherein the seal support is formed integrally with an inner case element.

18. The seal support of claim **15**, wherein the meshing ring is disposed axially adjacent to an adjacent turbine rotor upstream of the seal support.

19. The seal support of claim **18**, wherein the meshing ring engages a pocket formed on an aft end of the adjacent turbine rotor.

20. The seal support of claim **15**, wherein the seal carrier is configured to support a piston ring seal in conjunction with a vane ring radially outward of the seal support.

* * * * *