Dec. 29, 1964 W. J. DURHAM 3,162,920

REMOVABLE GROMMET ATTACHMENT STRUCTURE FOR SHEET COVERS

Filed Aug. 30, 1963

FIG. 2

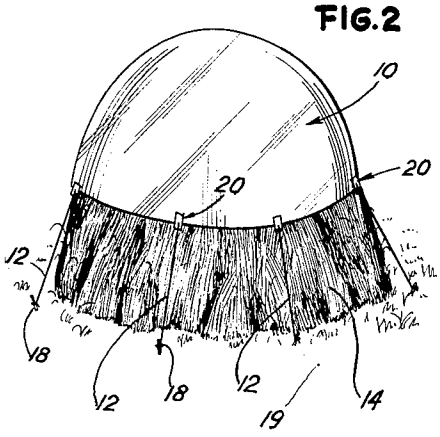

FIG. 1

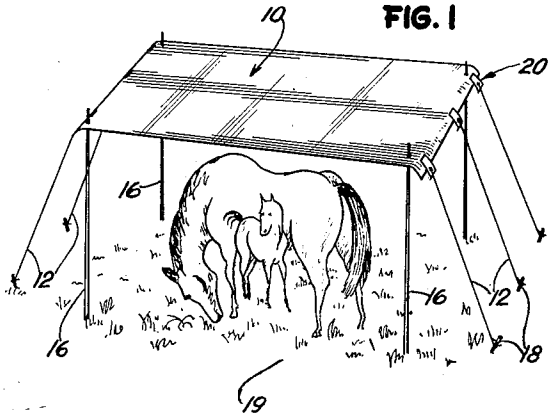

FIG. 3

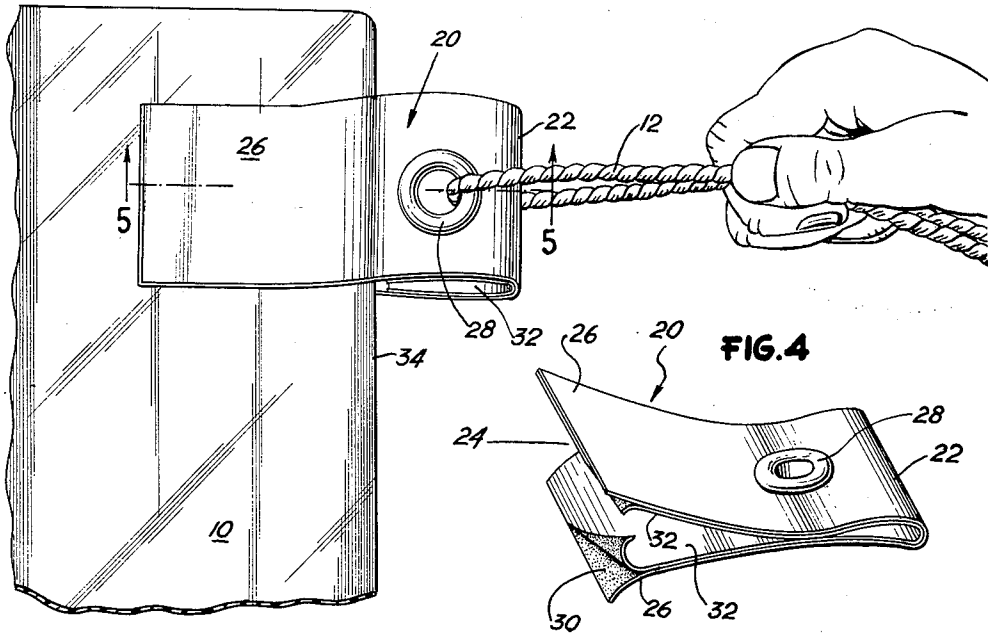

FIG. 4

FIG. 5

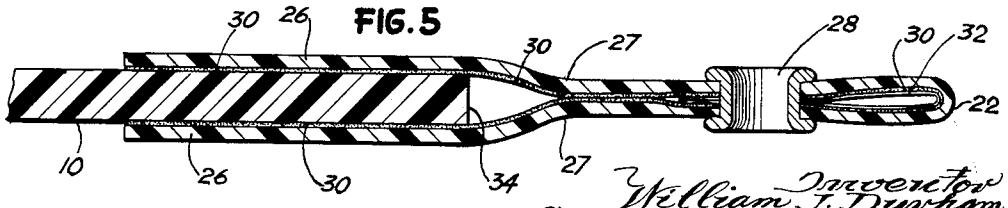

William J. Durham Inventor

By Silverman, Mullin, Cass & Kaufman Attorneys

United States Patent Office 3,162,920 Patented Dec. 29, 1964

3,162,920

REMOVABLE GROMMET ATTACHMENT STRUCTURE FOR SHEET COVERS

William J. Durham, Chicago, Ill., assignor to Charles Schwartz & Company, Chicago, Ill., a corporation of Illinois

Filed Aug. 30, 1963, Ser. No. 305,588
3 Claims. (Cl. 24—265)

This invention relates to a novel grommet attachment structure which is adapted to be removably secured to tarpaulin-like covers at selected locations along the marginal edges of the cover.

Covers of the general character with which the invention is concerned can be made of plastic sheet material or canvas or waterproof fabric material and can be made in various shapes and sizes. Such covers are widely used in many different ways, such as, for animal shades, windbreaks, haystack or corncrib covers, as well as many other ways too numerous to mention. Heretofore, metal grommets or eyelets were secured at spaced locations along marginal edges of the cover by means of special eyelet machines which pierced the cover and anchored the eyelet. Once so secured, the eyelet or grommet was intended to become a permanent installation. Guy lines, such as ropes, cables or the like were threaded through the eyelet and tied to a suitable fixture, such as a peg, hook, stake or the like for installing the cover in its intended operational position.

This manner of providing eyelets or grommets for covers of flexible sheet material engendered disadvantages which are eliminated by the invention. Constant or unusual strain of the guy line on the grommet tended to loosen the grommet from the cover. Long use of the cover also weakened the material of the cover at the area of the attachment of the grommet thereto so that the cover was torn. Once a grommet was secured to the cover, it became a permanently located part of the cover so that the grommet could not be used in possible uses of the cover. For instance, a rectangularly shaped cover having grommets at the corners only of the sheet, might not be used conveniently for covering a haystack, for instance, without portions of the marginal edges of the cover gapping. Consequently, additional grommets would be desired located between grommets already provided on the cover for attaching additional guy lines to prevent gapping of the cover along marginal edge portions thereof when used to cover a haystack. In other words, a cover might require additional grommets at selected locations thereon to enable the cover to be used in a different manner not originally intended for it. In any event, either replacing grommets or attaching additional grommets on a cover required special equipment which is not immediately available to most users of covers of this kind.

Accordingly, it is a primary object of the invention to provide a removable grommet attachment device for flexible sheet covers which is capable of eliminating the disadvantages heretofore enumerated.

An important object of the invention is to provide a device of the character described comprising, a strip or tape of waterproof flexible material having a fold at one end thereof and a bifurcated end opposite said fold, a grommet or eyelet secured to the strip or tape adjacent said fold, said bifurcated end having means on interior surface portions thereof for removably securing said device to a marginal edge of a cover sheet with said grommet spaced outwardly of said edge.

Another object of the invention is to provide a device of the character described which is comprised of a relatively wide strip of waterproof flexible sheet material, such as plastic, said strip being folded medially and transversely across the length thereof to provide a fold at one

extremity of the strip and a pair of free end portions at the opposite extremity of the strip, said free end portions having a pressure sensitive adhesive surface of high adhesive strength properties for attaching the device to a marginal edge of the cover sheet with the sheet sandwiched between said surfaces and said device having a grommet medially located between opposite lateral edges thereof and adjacent the fold and spaced outwardly from said edge.

Another object of the invention is to provide a device as described having protective strips covering said adhesive surface adapted to be removed for exposing the adhesive surfaces so as to permit the device to be installed.

Other objects of the invention reside in providing a device of the character described which is economical to manufacture, which can be sold separately from the cover sheet in conveniently packaged numbers thereof, which can be installed without resorting to expensive eyelet equipment, which is removable from the cover without tearing same, and which can be attached at selected locations and subsequently removed for attachment at different locations on the cover with attendant advantages.

The foregoing and other objects of the invention will become apparent from the ensuing disclosure in which a preferred embodiment has been described in detail and illustrated in the accompanying drawing, in which:

FIG. 1 is a perspective view showing a cover installed as an animal shelter by means of the removable grommet attachment device embodying the invention.

FIG. 2 is a perspective view showing another cover installed to cover a stack of grain, for instance, by means of the invention.

FIG. 3 is a perspective view showing a corner of a cover to which the attachment device embodying the invention has been secured.

FIG. 4 is a perspective view of said device with portions of the protective strips covering adhesive surfaces of the device partially peeled away.

FIG. 5 is an enlarged fragmentary sectional view taken along the line 5—5 of FIG. 3 and in the general direction indicated.

Referring now to the drawing, a representative cover is identified by the reference character **10** both in FIG. 1 and FIG. 2. In each instance, the cover **10** is formed of a suitable waterproof sheet material such as plastic or treated canvas or other fabric. In FIG. 2, the cover **10** is circular in configuration and in FIG. 1, the cover is rectangular. In this manner, it is intended to show that the cover **10** may be of any suitable size and shape. The cover **10** in FIG. 1 may have eight or ten devices embodying the invention attached thereto so that guy lines **12** can be employed to tie the cover down on the stack of grain **14**. In FIG. 2, only five devices embodying the invention are secured to the cover **10** and therefore, five guy lines **12** for installing the cover on posts or uprights **16** to form an animal shelter are illustrated. In each instance, the guy lines **12** are tied to stakes **18** inserted into the ground **19**. As will become apparent from the description of the invention which follows, each of the covers **10** can be used in ways other than illustrated in FIGS. 1 and 2 by either changing the locations of the devices embodying the invention or attaching additional devices at selected locations thereon.

The device embodying the invention is designated generally by the reference character **20** in FIG. 4. The device **20** is comprised of a single length of a relatively wide strip of flexible material folded transversely approximately midway between the extremities thereof so as to provide a fold end **22** and a bifurcated end **24** opposite said fold end **22**. The bifurcated end **24** is provided by the pair of free end portions **26** of the resulting pair of

superimposed ply portions 27. In the body of the folded strip is installed a grommet or eyelet 28 in closer proximity to the fold 22 so that the portions 26 are longer than the length of the folded strip between the grommet 28 and fold 22. The portions 26 may be characterized as elongate wings which are movable to permit their separation or spreading one relative to the other because of the flexible character of the material from which device 20 is made. Note that grommet 28 is engaged through both plies 27.

The interior surfaces of the wings 26 are covered with a pressure sensitive adhesive 30 of high strength adhesive properties and as seen in FIG. 4 a protective strip or cover 32 is secured overlying said adhesive. To facilitate manufacture of the device 20, a desired length of sheet material is coated entirely on one surface thereof with adhesive 30 and a strip 32 of corresponding size laid down over the adhesive 30. The assemblage is then folded transversely across the length thereof and the grommet 28 installed by means of conventional eyelet equipment. The completed device 20 with protective strip 32 then can be packaged in desired quantities for sale separate and apart or with the cover 10.

To install the device 20, the protective strip is peeled away from the adhesive 30 and torn off at the grommet 28. As seen in FIGS. 3 and 5, the location for installing device 20 is selected and the marginal edge 34 of the cover sheet is inserted between the wings 26 to reach adjacent grommet 28. The wings 26 are then pressed together to secure them to the cover 10 with grommet 28 and fold 22 outwardly of edge 34.

The adhesive 30 is selected to have great adhesive strength so as to adhere strongly to the cover sheet 10. Since the device 20 is relatively wide and the wings 26 are relatively long as compared to the portion of the device protruding beyond marginal edge 34, good purchase of the wings 26 upon the cover sheet 12 is afforded and the device 20 is anchored firmly on the cover 10. It may be further noted that strain on the grommet 28 by a guy line 12, as illustrated by the hand 36 in FIG. 3, is taken up in substantial measure by that portion of the device 20 protruding beyond the edge 34. Consequently, there is a reduced tendency for tearing the cover 10 when guy lines are pulled to tie the cover 10 down tightly to the stakes 18. In the event tearing occurs, it will occur only at the grommet 28, which is secured on the device 20 and not on cover 10, as in previous practice. Accordingly, the torn device 20 can be removed and replaced with a new device 20 installed at the same location on cover 10.

The device 20 is formed preferably from a strong, water resistant material which will not stretch or give appreciably when subjected to the pull of a guy line 12. Such a suitable material is a polyethylene plastic, for instance, although other materials may be suitable. It may be desirable to employ a material for device 20 which is slightly weaker than the cover 10 so that any rupture or tearing by reason of excessive pull by a guy line 12 preferentially will adversely affect the device 20 which is replaceable.

What it is desired to secure by Letters Patent of the United States is:

1. A removable grommet attachment device for flexible sheet covers comprising a relatively wide, elongate band of water-proof, flexible material, said band being folded transversely to form a pair of ply portions having a pair of free ends defining a bifurcated end portion and a closed opposite end portion, a grommet secured to said band through both of said ply portions at a location closer to said opposite end portion than to the bifurcated end portion, said bifurcated end portion having means thereon to removably secure the marginal edge of a sheet cover therebetween with the grommet spaced outwardly from said edge, wherein the area of purchase of the ply portions upon the sheet cover is greater than the area of that portion of the device which extends outwardly from the marginal edge of the cover sheet, said means comprising a coating of high strength, pressure sensitive adhesive formed upon facing surfaces of said ply surfaces, and said adhesive coating having a covering strip which has end portions adapted to be peeled away therefrom and torn away from the said grommet to expose the said coating there underlying for securement thereof to the said marginal edge, the portion of the covering strip remaining reinforcing the portion of the said elongate band between the grommet and the fold.

2. A removable grommet attachment device for flexible sheet covers comprising at least one relatively wide, elongate length of water-proof, flexible material, said material having a pair of ply portions of equal length and width forming a pair of matching free ends defining a bifurcated end portion and a closed opposite end portion, a grommet secured to said band through both of said ply portions at a location closer to said opposite end portion than to said bifurcated end portion, said bifurcated end portion having a coating of pressure sensitive adhesive formed upon inner working surfaces of said ply portions to removably secure the marginal edge of a sheet cover between said inner facing working surfaces in a sandwich with the grommet spaced outwardly from said edge, wherein the area of purchase of the ply portions upon the sheet cover is greater than the area of that portion of the device which extends outwardly from the marginal edge of the sheet cover, and said inner facing surfaces are normally separated by a covering strip which has end portions adapted to be peeled away therefrom to expose the said coating there underlying for securement thereof to the said marginal edge.

3. A removable grommet attachment device for flexible sheet covers comprising a relatively wide, elongate band of waterproof, flexible material, said band being folded transversely to form a pair of ply portions having a pair of free ends defining a bifurcated end portion and a closed opposite end portion, a grommet secured to said band through both of said ply portions at a location closer to said opposite end portion than to the bifurcated end portion, said bifurcated end portion having means thereon to removably secure the marginal edge of a sheet cover therebetween in a sandwich like fashion with the grommet spaced outwardly from said edge, wherein the area of purchase of the ply portions upon the sheet cover is greater than the area of that portion of the device which extends outwardly from the marginal edge of the sheet cover, said means comprising a coating of high strength, pressure sensitive adhesive formed upon facing surfaces of said ply portions, and said adhesive coating having a covering strip which has end portions adapted to be peeled away therefrom and torn away from the said grommet to expose the said coating there underlying for securement thereof to the said marginal edge.

References Cited by the Examiner

UNITED STATES PATENTS

1,393,801	10/21	Lovell.	
1,687,859	10/28	Fontaine	24—67.1
2,292,272	8/42	Hirshfield.	
2,299,078	10/42	Craig et al.	135—1
2,567,697	9/51	Craighead et al.	135—1
2,801,948	8/57	Walker	24—202 X
2,865,069	12/58	Gamble	24—9
3,052,436	9/62	Margulis	248—28
3,116,746	1/64	Bird	135—1

FOREIGN PATENTS

1,079,803	4/60	Germany.
1,142,288	3/57	France.

DONLEY J. STOCKING, *Primary Examiner.*