March 15, 1949. E. P. PAXMAN 2,464,711

CONSTRUCTION OF INTERNAL-COMBUSTION ENGINES

Filed June 26, 1944 3 Sheets-Sheet 1

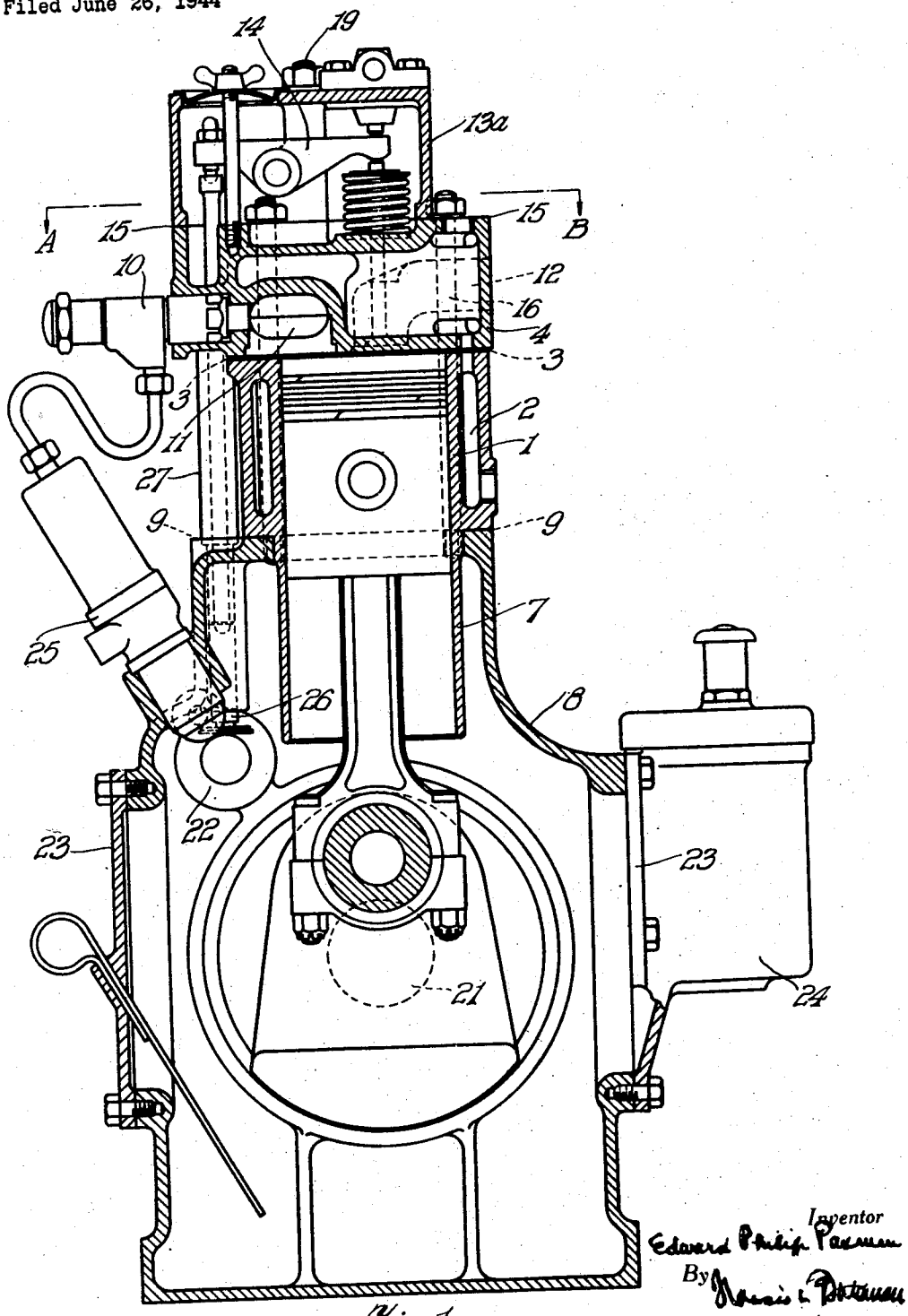

Fig. 1.

Inventor
Edward Philip Paxman
By Morris & Paxman
Attorneys

March 15, 1949. E. P. PAXMAN 2,464,711

CONSTRUCTION OF INTERNAL-COMBUSTION ENGINES

Filed June 26, 1944 3 Sheets-Sheet 2

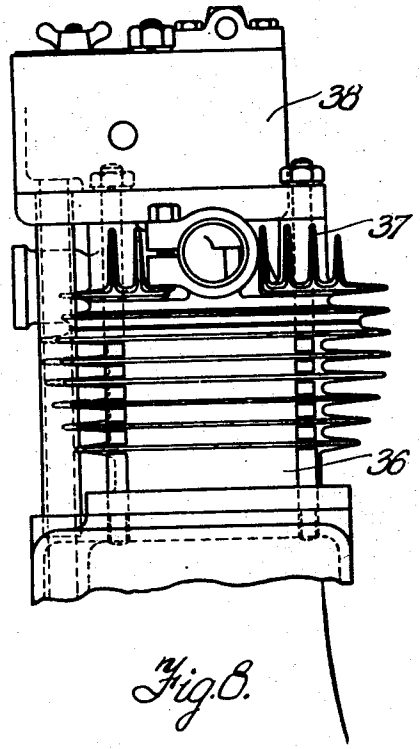

Fig. 8.

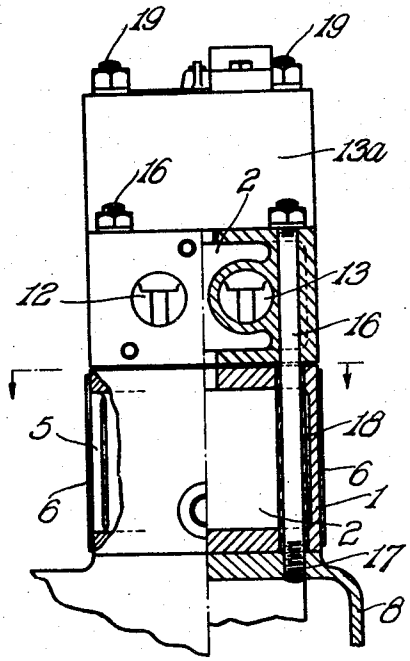

Fig. 2.

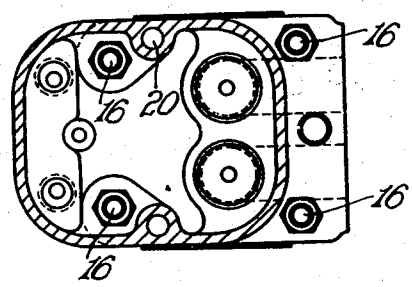

Fig. 4.

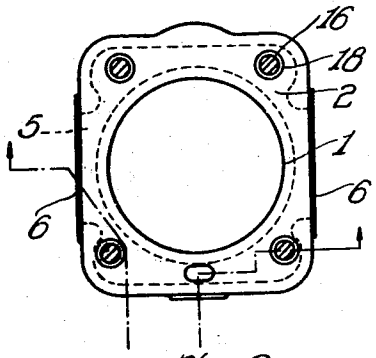

Fig. 3.

Inventor
Edward Philip Paxman
By Morris & Bateman
Attorneys

March 15, 1949. E. P. PAXMAN 2,464,711

CONSTRUCTION OF INTERNAL-COMBUSTION ENGINES

Filed June 26, 1944 3 Sheets-Sheet 3

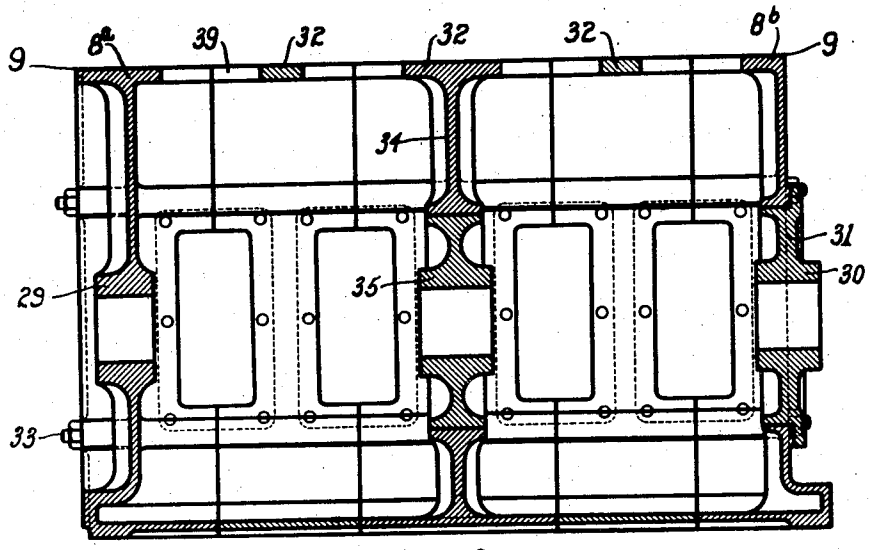

Fig. 6

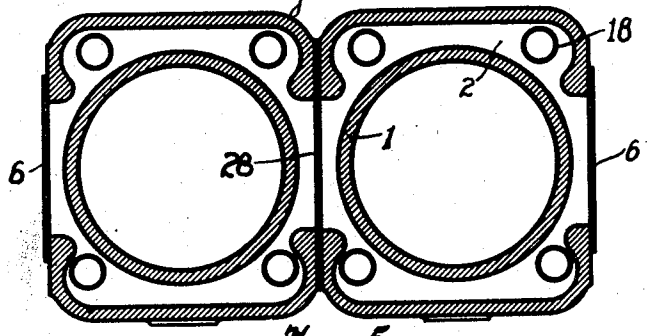

Fig 5

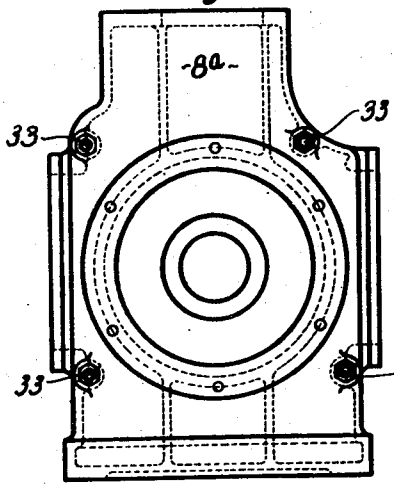

Fig. 7.

Inventor
Edward Philip Paxman
By Marin & Paxman
Attorneys

Patented Mar. 15, 1949 2,464,711

UNITED STATES PATENT OFFICE

2,464,711

CONSTRUCTION OF INTERNAL-COMBUSTION ENGINES

Edward Philip Paxman, Colchester, England

Application June 26, 1944, Serial No. 542,175
In Great Britain March 10, 1943

6 Claims. (Cl. 123—195)

1

This invention relates to the construction of internal combustion engines, and has for its main object to provide improvements in the general design and arrangement of such engines in order to simplify and expedite manufacture of individual components and assembly into a complete engine.

A further object of the invention is to provide an improved method of manufacturing internal combustion engines by the use of standard unitary components so formed that a multicylinder engine can be built up from components of exactly similar form to those used for a single cylinder engine, while the specialised machining and alignment work is reduced to the minimum.

According to the invention internal combustion engines are provided wherein one or more of each of the constituent portions comprising the same, viz. crank case unit, cylinder unit, cylinder head unit, and valve cover unit are assembled together, characterised in that each contacting face of each constituent portion is machined in the same plane as the face of the portion to which it is adjacent.

The invention also consists in components for use in the construction of internal combustion engines comprising crank case, cylinder, cylinder head and valve cover assemblies wherein the adjacent faces of such assemblies are machined in the same plane.

The invention further provides a method of constructing internal combustion engines having single or multiple cylinders by bolting together crank case, cylinder, cylinder head and valve cover components which are machined in a common plane on their contacting faces.

Reference will now be made to the accompanying drawings which illustrate the construction of internal combustion engines according to the invention, and in which—

Fig. 1 is a sectional elevation of an assembled water-cooled engine,

Fig. 2 is an elevation partly in section of the cylinder assembly taken at right angles to Fig. 1,

Fig. 3 is a plan of the cylinder block unit,

Fig. 4 is a sectional plan taken on the line A—B of Fig. 1,

Fig. 5 is a plan showing the cylinder block arrangement for a two-cylinder engine,

Fig. 6 is a sectional elevation to illustrate the construction of the crank case for a multi-cylinder engine according to the invention,

Fig. 7 is an end elevation of the crank case shown in Fig. 6, and

Fig. 8 is an elevation of assembled air-cooled

2

cylinder and cylinder head units adapted for use as an alternative to the cylinder unit shown in Figs. 1 to 4.

Referring first to Figs. 1, 2, 3 and 4, the cylinder 1 of an internal combustion engine is formed with its water jackets 2 as a single casting whose upper surfaces all lie in one plane indicated at 3, 3, which renders the machining of such surfaces to form a joint face to co-operate with a joint face on the cylinder head unit 4 a simple and straightforward operation. To facilitate casting and core removal, the cylinder block unit which is square or rectangular in plan, as shown in Fig. 3, is formed with openings 5 on opposed sides, which openings are closed subsequently by the addition of thin metal plates 6, welded, vulcanised or rubber bonded in position, thereby avoiding the necessity for using any projecting fixation members which would increase the distance apart of the cylinders where a number of the units illustrated in Figs. 1 to 4 have to be assembled to form a multi-cylinder engine, as hereinafter described.

From the cylinder block unit the cylinder is continued as a sleeve 7 projecting downwardly into a crank case 8, the upper portion of which terminates in a joint face whose component portions lie all in one plane indicated by 9—9 and upon which a similarly formed joint face on the underside of the cylinder block unit is adapted to seat.

The cylinder head unit 4 which is superimposed upon the cylinder 1 contains a fuel injection nozzle 10, combustion chamber 11, exhaust port 12, air inlet 13 and air inlet and exhaust valves, and upon this unit is superimposed a valve cover 13a which contains the valve tappets, one of which is seen at 14 in Fig. 1. The joint faces between the valve cover 13a and cylinder head 4 which lie in the plane marked 15—15, lie all in one plane to facilitate machining and assembly.

The assembly of units shown in Figs. 1–4 are adapted to be secured together by means of bolts 16 which pass through the cylinder head unit 4 and cylinder block unit and engage screw-threaded sockets 17 in the upper portion of the crank case 8. To enable these bolts to pass through the cylinder water jacket this is provided with tubes 18 (Figs. 2 and 3) extending from top to base of the cylinder block unit. The valve cover unit 13a is secured in position as part of the assembly by means of bolts 19 which pass through passages 20 (Fig. 4) and engage screw-threaded sockets in the upper portion of the cylinder head unit.

The crank case 8 houses a crank shaft 21 and cam shaft 22 and its sides are closed by inspection doors 23, one of which can conveniently carry an oil filter 24. On the upper part of the crank case is mounted the fuel pump 25 and between the crank case and valve cover unit 13a extend push rods 26 actuated by the cam shaft 22 and connected to the valve tappets 14. These push rods are housed in tubular casings 27 fixed between the head of the crank case and the valve cover unit and which can be of such form as to be clamped in place by the fixing of those components in their assembled positions.

To produce a multi-cylinder engine, cylinder block units, cylinder head units and valve cover units of the same character as those already described are employed to build up a number of assemblies all mounted by means of the vertical bolts 16 upon a common crank case, and to enable the cylinders to be placed closely together, adjacent cylinders may be arranged as shown in Fig. 5 where an annular thin metal plate 28 welded, vulcanised or rubber bonded in position, separates two adjacent water jackets. A crank case may be employed specially constructed to suit a single, twin or multiple assembly. This arrangement requires the crank case 3 shown in Fig. 1 to be formed in two parts, vertically divided, these parts being marked 8a and 8b in Fig. 6, and which parts may be assembled in direct relation for a single cylinder engine, or one or more casing sections may be interposed between these parts for a twin or multiple cylinder engine. The parts 8a and 8b are formed with flanged apertures at 29 and 30 to carry the bearings for the crank shaft, the flanged portion 30 forming part of a separate plate 31 which is secured in position over the crank shaft after the crank has been positioned beneath the cylinder or cylinders. The completion of this crank case assembly forms a series of circular apertures 39 in which the cylinders 7 are inserted and a common joint face 9—9 on which the cylinder block units are adapted to seat.

To adapt this crank case to a multi-cylinder engine as shown in Fig. 6, the parts 8a and 8b would form the end sections of the crank case which is completed by the insertion of casing elements 32 formed as standard components, the whole crank case assembly being held together by long bolts indicated at 33 in Fig. 6 extending horizontally throughout the structure. The crank case shown in Fig. 6 is for a four-cylinder engine and the central sectional element 32 is preferably formed with a web 34 and bearing flange 35 for supporting the central portion of the crank shaft.

It is to be understood that the crank case may take a variety of forms other than that shown in Figs. 1, 6 and 7 according to whether the engine is intended for marine, stationary or automobile use.

Fig. 8 shows the application of the invention to an air-cooled engine, wherein 36 is the cylinder which projects into the crank case as before, 37 is the cylinder head unit and 38 is the valve cover unit. These units are internally arranged in a manner similar to the units shown in Figs. 1 and 2 and they have their joint faces each arranged with its components all in one plane. An assembly such as shown in Fig. 8 can replace, according to conditions, the assembly shown in Fig. 1 as all units utilised according to this invention are of standard dimensions.

I claim:

1. The method of constructing internal combustion engines, which consists in pre-forming cylinder units, cylinder head units, valve cover units and crank case units, providing each of said units with joint faces the component parts of each of which lie in a common plane, and assembling such units as pre-formed and in the numbers required to form a single or multiple cylinder engine.

2. An internal combustion engine comprising cylinder units, cylinder head units, valve cover units and crank case units, all of such units having joint faces the component parts of each of which lie in a common plane, and being capable of assembly directly to form a single or multiple cylinder engine.

3. An internal combustion engine as defined in claim 2, wherein the joint faces of the crank case units are transverse to the axis of the crank case, and the crank case units are provided with complemental cylinder unit receiving openings.

4. An internal combustion engine as defined in claim 2, wherein the cylinder units have joint faces which are transverse to the axis of the crank case.

5. An internal combustion engine as defined in claim 2, wherein the cylinder units are provided with water jackets having openings at opposite sides, the openings in adjacent jackets being opposite to one another, and including a plate interposed between joint faces of adjacent cylinder units and covering said openings.

6. A water-cooled internal combustion engine constructed of standard parts, comprising a crank case divided axially into a pair of end sections and a plurality of intermediate sections interposed between the end sections, said sections having joint faces lying in planes transverse to the axis of the crank case, means for securing said sections together axially, and a plurality of cylinders assembled in a row longitudinally of the crank case and having water jackets each provided with openings at its opposite sides, the cylinders having joint faces lying in planes transverse to the axis of the crank case, and the openings in adjacent jackets being opposite to one another and intersecting the joint faces of the respective cylinders, and a plate interposed between the joint faces of adjacent cylinders and covering said openings.

EDWARD PHILIP PAXMAN.

REFERENCES CITED

The following references are of record in the file of this patent:

UNITED STATES PATENTS

Number	Name	Date
1,287,386	Masury	Dec. 10, 1918
1,316,420	Bugatti	Sept. 16, 1919
1,322,255	Maire	Nov. 18, 1919
1,404,550	Setz	Jan. 24, 1922
1,664,091	Sinclair	Mar. 27, 1928
1,720,625	Chorlton	July 9, 1929
1,900,587	Schutzniedrig	Mar. 7, 1933
2,040,847	Hesselman	May 19, 1936
2,081,543	Kohler	May 25, 1937
2,169,236	Frazier	Aug. 15, 1939
2,171,783	Dennison	Sept. 5, 1939
2,341,488	Taylor	Feb. 8, 1944