J. CARRIGAN.

COMBINED FIRE ALARM AND ANNUNCIATOR.

APPLICATION FILED APR. 27, 1916.

1,249,717.

Patented Dec. 11, 1917.

3 SHEETS—SHEET 1.

Fig - 1 -

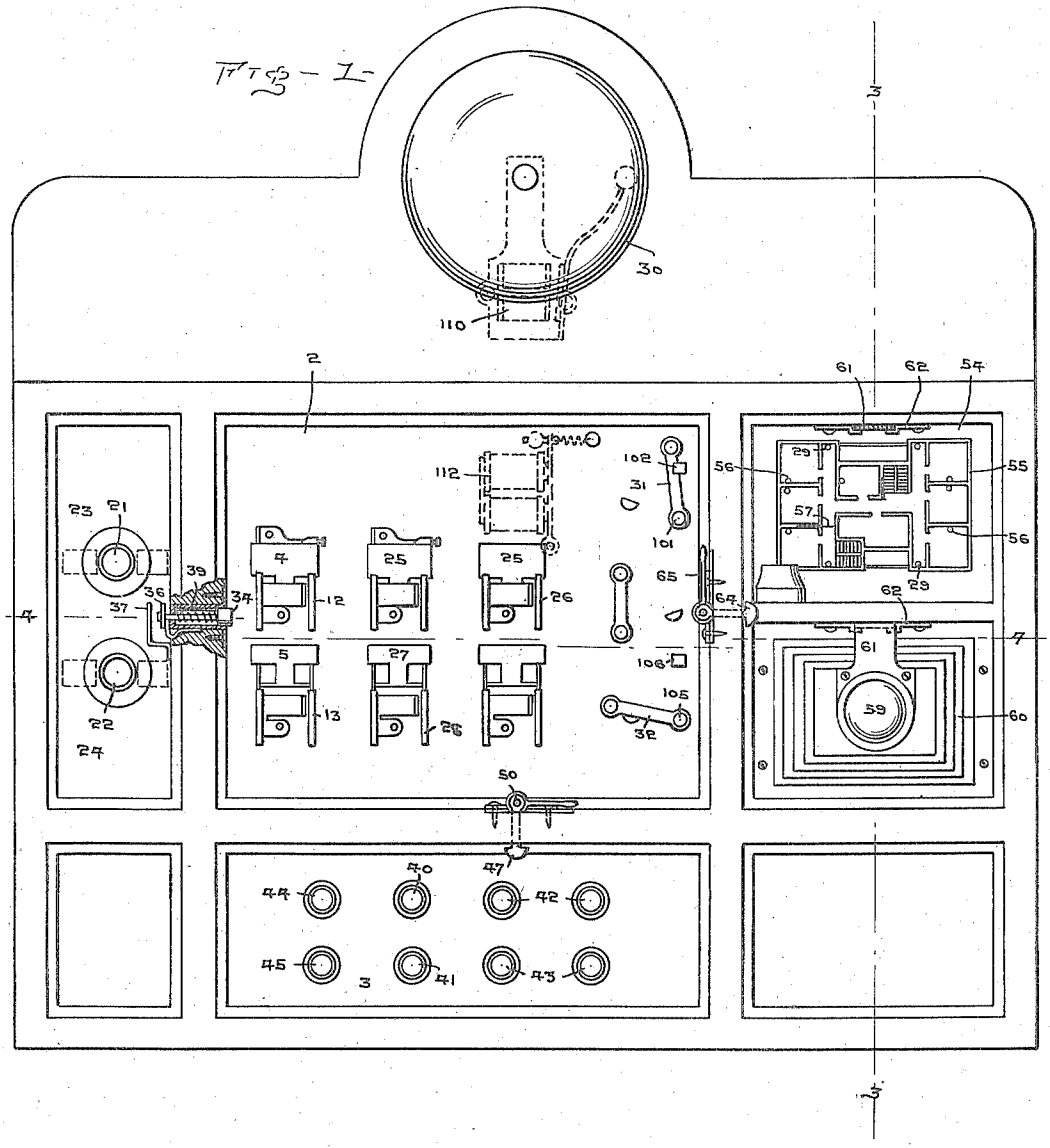

Witnesses

Thos. W. Riley

C. S. Fryer.

J. Carrigan Inventor

By W. J. FitzGerald

J. CARRIGAN.

COMBINED FIRE ALARM AND ANNUNCIATOR.

APPLICATION FILED APR. 27, 1916.

1,249,717.

Patented Dec. 11, 1917.

3 SHEETS—SHEET 2.

Fig. 2.

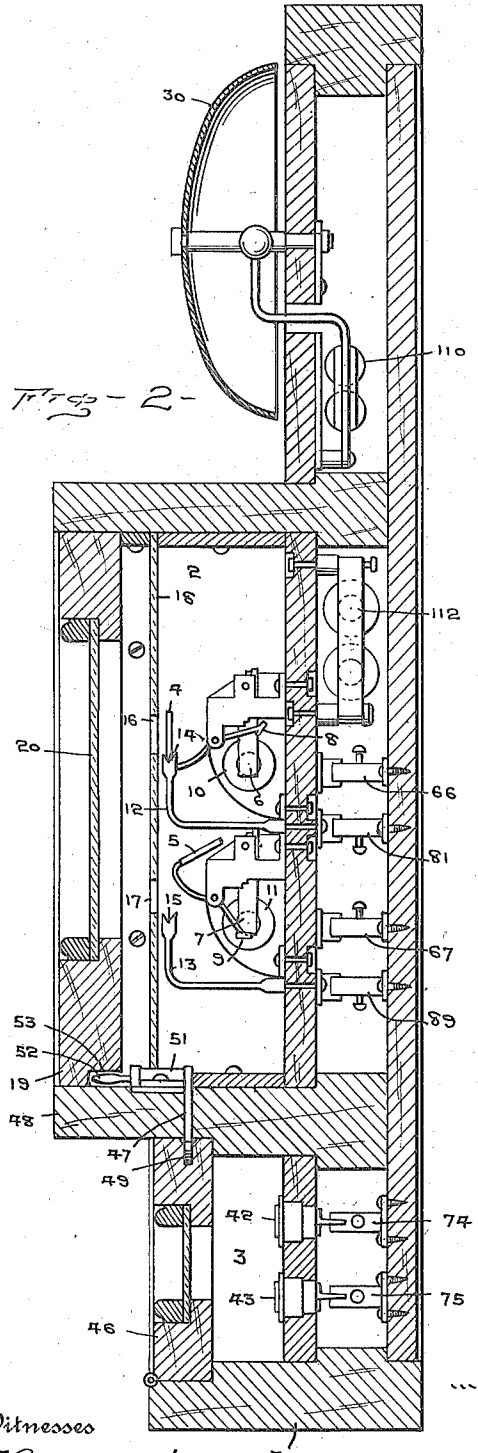

Fig. 3.

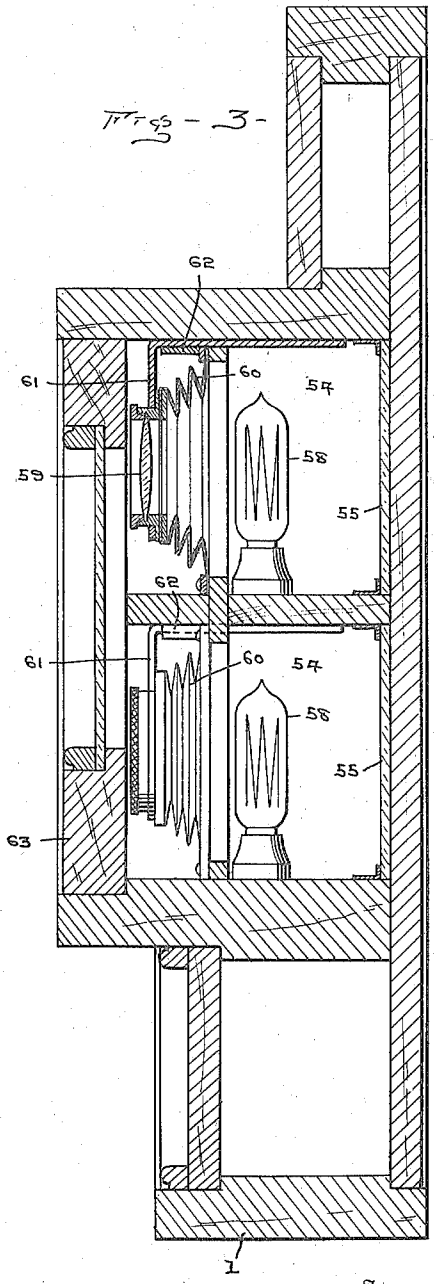

Witnesses

Thos. W. Riley

C. S. Fryt

Inventor

J. Carrigan

By W. J. FitzGerald & Co

Attorney

J. CARRIGAN.

COMBINED FIRE ALARM AND ANNUNCIATOR.

APPLICATION FILED APR. 27, 1916.

1,249,717.

Patented Dec. 11, 1917.

3 SHEETS—SHEET 3.

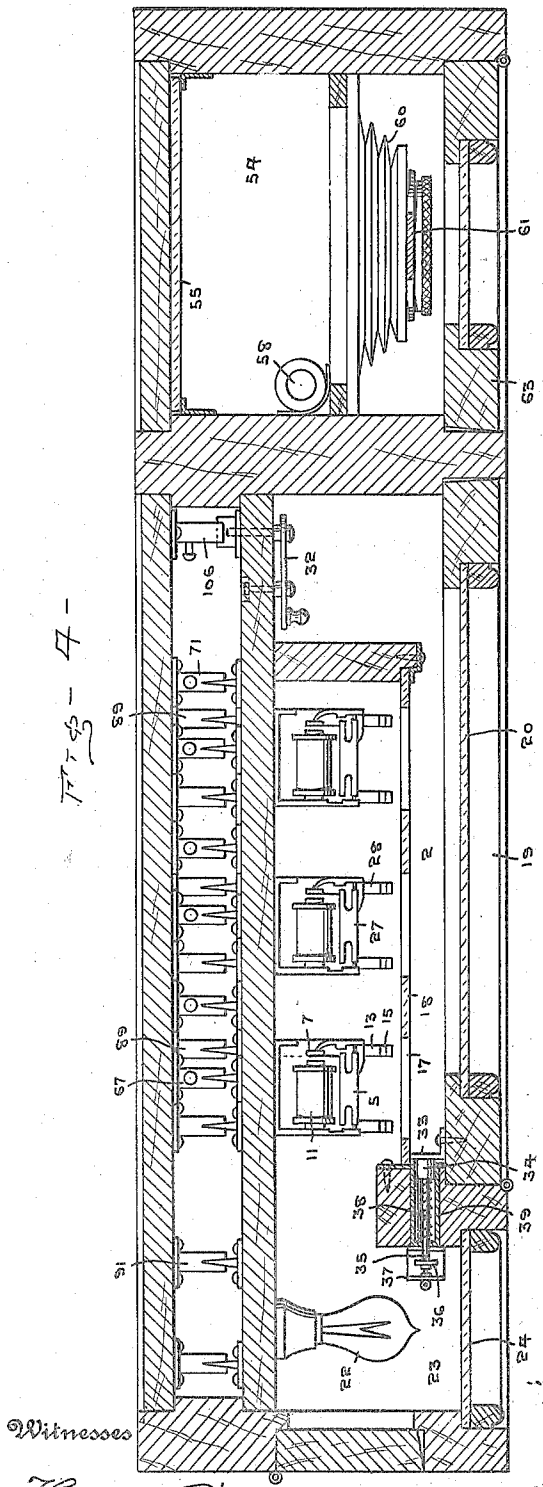

Witnesses

Thos. W. Tiery

C. S. Frye.

Inventor

J. Carrigan

By W. J. FitzGerald & Co

Attorney

UNITED STATES PATENT OFFICE.

JOHN CARRIGAN, OF SEATTLE, WASHINGTON.

COMBINED FIRE-ALARM AND ANNUNCIATOR.

1,249,717. Specification of Letters Patent. Patented Dec. 11, 1917.

Application filed April 27, 1916. Serial No. 94,006.

To all whom it may concern:

Be it known that I, JOHN CARRIGAN, a citizen of the United States, residing at Seattle, in the county of King and State of Washington, have invented certain new and useful Improvements in Combined Fire-Alarms and Annunciators; and I do hereby declare the following to be a full, clear, and exact description of the invention, such as will enable others skilled in the art to which it appertains to make and use the same.

My invention relates to new and useful improvements in a combined fire alarm and annunciator and more particularly to that class to be used in buildings, in connection with automatically controlled fire doors, thermostats and air valves and to electrically connect the same to parts of the annunciator whereby when any of said thermostats or fire doors are operated, the fact will be instantly noted upon the annunciator.

A further object is to provide an annunciator for use in connection with an alarm mechanism for sounding an alarm on each floor of the building and interiorly and exteriorly of the building when a thermostat is operated or a door closed anywhere in the building.

A further object is to provide means for creating a light upon the annunciator to indicate the location of the fire and upon what floor of the building.

A further object is to provide means for retaining the doors of the annunciator in normally closed position.

And a further object is to provide the annunciator with plans of the various floors of the building and provide observation openings whereby the location of the fire may be instantly ascertained and likewise what thermostats within the building have been operated and fire doors closed.

Other objects and advantages will be hereinafter set forth and more particularly pointed out in the accompanying specification.

In the accompanying drawings which are made a part of this application,

Figure 1 is a front elevation of the annunciator with parts thereof removed and parts shown in section.

Fig. 2 is a vertical sectional view thereof on an enlarged scale.

Fig. 3 is a vertical sectional view as seen on line 3—3 of Fig. 1.

Fig. 4 is a horizontal sectional view as seen on line 4—4 of Fig. 1.

Referring to the drawings in which similar reference numerals designate corresponding parts throughout the several views, 1 indicates the housing of the annunciator, said housing having compartments 2 and 3 therein, the compartment 2 containing a plurality of drops and controlling coils therefor, while the compartment 3 contains a plurality of push buttons which may be used for operating any of the drops when desired.

The drops 4 and 5 are connected with fire doors which are positioned at suitable points throughout the building, there being a drop for each fire door so that when one of the fire doors is released and moved to closed position an electric circuit is closed which will release the armatures 6 and 7 cooperating with arms 8 and 9 respectively of the drops 4 and 5, the free ends of said arms being engaged with the ends of the armatures when the drops are in elevated position.

The armatures 6 and 7 are released from engagement with the arms 8 and 9 when a flux is set up in coils 10 and 11, said armatures being attracted by the coils and moved away from the arms. As the drops 4 and 5 descend, the ends thereof engage with the brackets 12 and 13 respectively, the ends of the brackets preferably having notches 14 and 15 therein for the reception of the edges of the drops and when the descent of the drops is stopped by the brackets they will be exposed through openings 16 and 17 respectively in a plate 18 extended through the compartment 2, and in order to provide a clear vision through said openings, the door 19 forming a closure for the forward part of the compartment 2, is provided with any suitable form of transparent material 20, preferably glass. The form of indicator shown is applicable for a building having but two floors, although, it will be understood that by increasing the number of drops and other parts the indicator can be used in connection with buildings having any number of compartments or rooms and in following the description this should be borne in mind.

In the present instance the drop 4 is used in circuit with the fire doors of the second floor and in order to ascertain instantly

the floor upon which the fire is located, the lowering of the drop into engagement with the bracket 12 closes a circuit to the lamp 21, while a similar lamp 22 is connected to the brackets 13 and is lighted by the drop 5 coming in contact with said brackets, said drop 5 being connected to the fire doors of the lower floor. The lamps 21 and 22 are placed in a compartment 23 at one end of the compartment 2 and as said compartment is covered with glass 24, or similar transparent material, a view of either of the lamps may be had at a casual glance.

In addition to the fire doors, a plurality of thermostats may be distributed through the different rooms of the building which will operate when a predetermined temperature occurs adjacent any particular thermostat and connected to the thermostats of the upper floor are drops 25, which drops coöperate with brackets 26 connected with the same circuit as are the brackets 12 so that when any one of the drops 25 descends the lamp 21 will be illuminated. The drops 25 are controlled in the same manner as the drop 4, the energizing of the coil connected with each drop operating to release said drops.

The thermostats positioned on the lower floor are likewise connected to drops 27 which coöperate with brackets 28 to form a circuit through the lamp 22, said drops 27 being controlled in the same manner as the drop 5 and the drops 25.

In addition to supplying the various drops and lights for indicating the location of the fire, a plurality of gongs are positioned at various points throughout the building, as indicated at 29 in Fig. 1 of the drawings, in which the floor plan of one floor is shown in diagram, said gongs being attached to the circuits of the thermostats and fire doors while an additional gong 30 is attached to the indicator, the circuits of the gongs 29 being additionally controlled, that is cut in or out of circuit, by means of switches 31 and 32 so that the ringing of said gongs may be stopped, the switch 31 coöperating with the gong circuits of the upper floor and the switch 32 with the lower floor. The gong 30 is automatically cut out by opening the door 19, the inner face of the hinge edge of the door having a plate 33 attached thereto, which, when the door is in closed position, engages a push button 34, the stem 35 of the push button being attached to one arm 36 of a switch so that when the push button is forced inwardly by the plate 33, the arm 36 of the switch will engage the opposite arm 37 of the switch, thereby closing the circuit to the gong 30 and said circuit is held closed until the door 19 is opened.

As soon as the door 19 is opened the push button 34 is moved outwardly by means of a spring 38 thereby disengaging the arm 36 from the arm 37 of the switch and breaking the circuit to the gong 30, the arm 36 then engaging a hollow sleeve 39 extending through one wall of the housing 1 through which the push button 34 extends, the engagement of the arm 36 with the hollow sleeve closing the circuit through the drops.

In order to test the apparatus controlling the fire doors, push buttons 40 and 41 are placed in the circuits of the drops 4 and 5 so that by depressing said buttons the drops will be operated, providing the system is in proper condition, and the drops 25 and 27 for the thermostats are likewise connected with push buttons 42 and 43 respectively so that the circuit connecting the thermostats may likewise be tested to ascertain if they are in perfect working condition.

The annunciator drops and lights may be operated from either the expansion of the thermostats or by the actuation of the releasing means for normally holding the fire doors open and when the alarm is sounded it is instantly noted by observing the annunciator, and if desired, the fire doors adjacent the fire may be released to automatically swing closed by pressing buttons 44 and 45 which are connected with the circuits of the drops 4 and 5 respectively and the fire doors connected thereto, the operation of said buttons automatically releasing the doors to permit the same to move to a closed position.

It is to be understood of course that each fire door upon each floor is to be connected with its respective push button as well as to a drop so that any or all of the doors may be closed as occasion may require to confine the fire in a certain part of the building.

The testing push buttons for the thermostats and fire doors, as well as the releasing buttons for the fire doors are preferably placed in the compartment 3, a door 46 being employed for closing said compartment until access thereto is required, the door 46 being normally held in closed position by means of a latch 47, said latch extending downwardly through a slot in the partition wall 48 between the compartments 2 and 3 and entering a channel 49 in the upper edge of the door 46 and to prevent the opening of the door 46 until the door 19 is opened, the upper end of the latch is fixed to a shaft 50 which shaft extends at right angles to the latch and through bearings 51, the outer end of the shaft having a lever 52 attached thereto which enters a cavity 53 in the lower edge of the door 19 whereby it will be impossible to swing the latch 49 in either direction until the door 19 is opened sufficiently to release the lever 52 from the cavity 53.

In order to ascertain the exact location of

the fire when the alarm has been given, compartments 54 are provided at a suitable point upon the annunciator in which are placed miniature floor plans 55 of each floor of the building indicating thereon the exact location of each thermostat 56 and each fire door 57 and as the drops connected with the various fire doors and thermostats are given numbers which correspond with similar numbers applied to the thermostats and fire doors shown upon the floor plans, the exact location of the fire may be readily ascertained by noting the number upon the drop that has been operated and then locating the same number upon the floor plan indicating the thermostat or fire door to which the drop is connected. By providing this form of device, the useless destruction of parts of the building and contents by the firemen pouring water into parts of the building where there is no fire, although said parts may be filled with smoke, is obviated. The floor plan will also show to the firemen exactly what fire doors are closed and what means will be required to reach the room in which the fire is located.

Each compartment containing a floor plan is provided with an electric lamp 58 so that said compartment will be fully illuminated and as the floor plan is necessarily made upon a very small scale and as it is necessary to quickly read the floor plan so as to find the exact location of the fire, enlarging lenses 59 are provided, which are attached to telescoping bellows 60 and by moving the lens outwardly the full extent of the bellows to which it is attached, the floor plans will be greatly magnified so as to readily disclose the location of the various thermostats and fire doors indicated thereon.

The bellows and lenses are held in proper alinement by providing slide plates 61 which are substantially L-shape with one end secured to the lens casing and the opposite end introduced through guides 62 attached to the roofs of the compartments. The compartments 54 are closed by means of a door 63 which is held in closed position by means of a latch 64, said latch 64 being constructed identical with the latch 47 and held in closed position by the lever 65 engaging a cavity formed in the door 19 so that it will necessitate the opening of the door 19 before access may be had to the interior of the compartments 54. The lamps 58 are placed in the same circuit with the lights of the annunciator so that when the parts of the annunciator are operated the lights 58 will be likewise illuminated and said lamps are placed out of the line of vision through the lens whereby a clear vision of the floor plan may be had.

In operation, after the various parts have been properly set and adjusted, should a fire occur in any one of the rooms on the second floor of the building and nearer a thermostat than to the fire doors, the operation of the thermostat will operate one of the drops 25 and at the same time operate the gongs to sound an alarm.

The attendant, upon reaching the annunciator, opens the door 19 which stops the ringing of the gong and then releases the doors 46 and 63. The attendant then notes the number on the lowered drop and then ascertains the location of the thermostat connected to said drop, by extending the bellows 60, disposed in front of the plan of the upper floor and making an observation through the lens 59. The attendant may then close the fire doors on the upper or second floor by operating the push button 44, it being understood that there is a push button 44 for each fire door upon the respective floors and one of the doors may be closed by operating one button or all of the doors may be closed by operating all of the buttons.

If it is desired to stop the ringing of the fire gongs on the second floor, for instance, the lever 31 is swung laterally and disengaged from the post 102, which will break the circuit through the gongs, since the switch lever is connected in circuit with the respective drops and the alarm circuits of the second floor.

It will likewise be understood that upon operating any one of the drops, as when a thermostat is expanded, or a fire door caused to move to closed position by the heat releasing such door, the lamp indicating the floor upon which the fire is occurring and also the lamp in the compartment containing the plan of such floor, will be illuminated.

As soon as the firemen reach the building, the exact location of the fire, as to floor and room, may be quickly ascertained by noting the number of the drop or drops that have been operated and then making the observation of the floor plan corresponding to the floor of the building upon which the fire is located. In this manner the firemen can readily determine how to reach the fire with the least difficulty as it is clearly indicated what fire doors obstruct entrance to the fire.

It frequently occurs that the building is filled with smoke so that it is impossible for the firemen to exactly locate the fire, hence water is poured into parts of the building where there is no fire, not only injuring the building but destroying furniture, carpets and other articles within the rooms.

By providing the floor plan in connection with the annunciator, there is no occasion for discharging the water into parts of the building other than that in which the fire is burning and this point can be instantly ascertained by an observation of the chart and the operated drops on the annunciator.

After the fire has been extinguished the

various doors are manually opened and locked in their open position, the closing of the door 19 moving the arm 36 into engagement with the arm 37 thereby closing the circuit between the contact 37 and the gong 30. At the instant the door 19 is closed and this connecting circuit established, current will flow through this circuit through the reset relay 112 and back to the battery which will automatically reset the parts of the annunciator so that should another fire occur in the building, it will be instantly recorded upon the annunciator.

Having thus fully described my invention what I claim as new and desire to secure by Letters Patent of the United States, is:—

1. An annunciator comprising a plurality of drop annunciators, a testing button for each of said drop annunciators, a reset magnet adapted for use in connection with said drop annunciators, a lamp adapted to be arranged in circuit with said drop annunciators, a gong adapted to be arranged in circuit with said drop annunciators, and means for cutting said gong in and out of circuit with said drop annunciators.

2. An annunciator comprising a housing, a door for said housing, a plurality of drop annunciators mounted within said housing, lamps adapted to be arranged in circuit with said drop annunciators, a reset magnet for use in connection with said drop annunciators, a switch adapted to be arranged in circuit with said drop annunciators, and a gong adapted to be connected in circuit with said switch, said switch adapted to be actuated by the opening and closing of said door.

3. An annunciator comprising a plurality of drop annunciators, a lamp adapted to be arranged in circuit with said drop annunciators, an automatic switch adapted to be arranged in circuit between said lamp and drop annunciators, a gong adapted to be connected in circuit with said switch and adapted to be cut in and out of circuit by the actuation of said automatic switch, a hand operable switch adapted to be arranged in circuit with said drop annunciators, and the reset magnet for use in connection with said drop annunciators.

4. In a fire alarm annunciator comprising a housing having a plurality of compartments, miniature plans arranged in one of said compartments, a rigid frame mounted in said compartment, a bellows attached to said frame, a magnifying lens carried by the free end of said bellows, an adjustable slide plate supporting said lens, a guide for said slide plate, and a lamp arranged in said compartment between said frame and miniature plans.

In testimony whereof I have signed my name to this specification in the presence of two subscribing witnesses.

JOHN CARRIGAN.

Witnesses:

F. E. HAMMOND,

A. FITZHENRY.