(19) Europäisches Patentamt
European Patent Office
Office européen des brevets

(11) EP 1 970 335 A2

(12) EUROPEAN PATENT APPLICATION

(43) Date of publication:
17.09.2008 Bulletin 2008/38

(51) Int Cl.:
B65H 7/02 *(2006.01)* ***B65H 5/24*** *(2006.01)*
B65H 11/00 *(2006.01)*

(21) Application number: **08004803.6**

(22) Date of filing: **14.03.2008**

(84) Designated Contracting States:
AT BE BG CH CY CZ DE DK EE ES FI FR GB GR HR HU IE IS IT LI LT LU LV MC MT NL NO PL PT RO SE SI SK TR
Designated Extension States:
AL BA MK RS

(30) Priority: **16.03.2007 JP 2007068565**

(71) Applicant: **Komori Corporation**
Sumida-ku
Tokyo (JP)

(72) Inventors:
- **Saito, Nobuaki**
  Tsukuba-shi
  Ibaraki (JP)
- **Yuasa, Yutaka**
  Tsukuba-shi
  Ibaraki (JP)
- **Kobashi, Toshihiro**
  Tsukuba-shi
  Ibaraki (JP)
- **Saito, Hirofumi**
  Tsukuba-shi
  Ibaraki (JP)
- **Sakata, Ohra**
  Tsukuba-shi
  Ibaraki (JP)
- **Yamada, Kenji**
  Tsukuba-shi
  Ibaraki (JP)
- **Inoue, Motomi**
  Tsukuba-shi
  Ibaraki (JP)

(74) Representative: **Samson & Partner**
Widenmayerstrasse 5
80538 München (DE)

(54) Sheet abnormality detection apparatus and method

(57) A sheet abnormality detection apparatus includes a plurality of abutting members (112,142,236) which move upon coming into contact with at least one of sheets conveyed to overlap while being shifted from each other in a convey direction and an object attached to a sheet. The plurality of abutting members (112,142,236) are disposed side by side in a direction perpendicular to a sheet convey direction. The apparatus also includes an abnormality detection unit which detects a sheet abnormality on the basis of a relative positional shift among the plurality of abutting members (112,142,236). A sheet abnormality detection method is also disclosed.

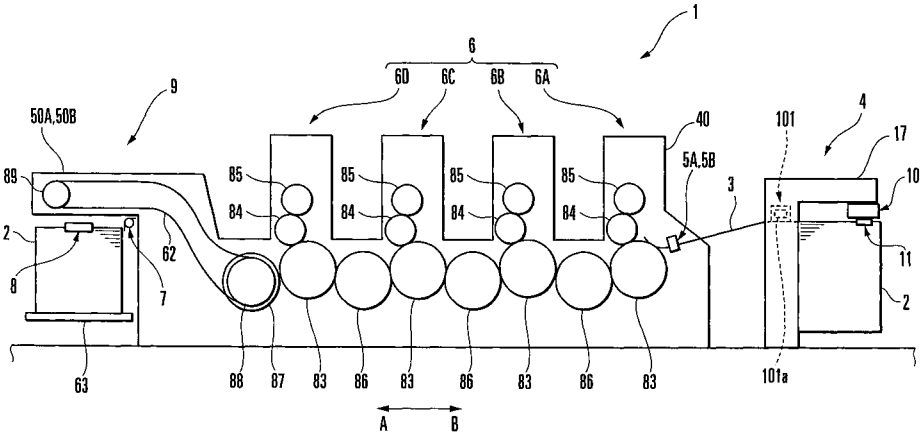

FIG. 1

EP 1 970 335 A2

Description

Background of the Invention

[0001] The present invention relates to a sheet abnormality detection apparatus which detects a sheet abnormal state in which a preceding sheet and a following sheet are conveyed to partially overlap, that is, they are conveyed to overlap while being shifted from each other in a convey direction, and a method for the same.

[0002] As a sheet abnormality detection apparatus employed by a feed device or the like in a conventional sheet-fed rotary printing press, one disclosed in Utility Model Laid-Open No. 56-158440 is available.

This sheet abnormality detection apparatus comprises an arm, magnetic member, and electrical contact. The arm is supported swingably. The magnetic member is attached to the arm such that its distal end is close to a feedboard, and extends in the widthwise direction of a sheet to be conveyed. The electrical contact is closed when a large foreign substance passes the magnetic member and raises the magnetic member to swing the arm, thus stopping the feed device.

[0003] In the conventional sheet abnormality detection apparatus, the foreign substance is detected only from the moving amount of the magnetic member raised by the large foreign substance. The apparatus is set not to detect an abnormal state when sheets are conveyed to overlap while being shifted from each other in the convey direction, if the thickness of the overlapping sheets is less than the thickness of the maximum number of sheets that overlap while being shifted from each other. While the sheets are being conveyed not to overlap at the start or end of sheet supply, if a foreign substance passes, the apparatus may erroneously determine that the sheets are being conveyed correctly to overlap while being shifted from each other. Then, the sheet abnormal state cannot be detected reliably. Consequently, the printing press, a printing material used by it, e.g., the jacket of an impression cylinder, or the like may be damaged.

[0004] The conventional sheet abnormality detection apparatus is provided downstream of the feeder board in the sheet convey direction. Even if the apparatus detects a folded corner of a sheet or a foreign substance attached to a sheet, it is too late to inhibit the swing arm shaft pregripper from supplying a defective sheet to the printing press. Even when an abnormality is detected and the cylinder is thrown off, if the folded corner of the sheet or the foreign substance attached to the sheet is large, it may damage the printing press or the jacket of the impression cylinder in the same manner as described above.

Summary of the Invention

[0005] The present invention has been made to solve the conventional problems described above, and has as its object to enable detection of an abnormal state occurring in part of the sheet, e.g., a folded corner of a sheet or a foreign substance attached to a sheet among sheets under conveyance to overlap while being shifted from each other in the convey direction, more reliably than in the conventional case.

[0006] In order to achieve the above object, according to the present invention, there is provided a sheet abnormality detection apparatus comprising a plurality of abutting members which move upon coming into contact with at least one of sheets conveyed to overlap while being shifted from each other in a convey direction and an object attached to a sheet, the plurality of abutting members being disposed side by side in a direction perpendicular to a sheet convey direction, and abnormality detection means for detecting a sheet abnormality on the basis of any relative positional shift among the plurality of abutting members.

[0007] According to the present invention, there is also provided a sheet abnormality detection method comprising the steps of conveying sheets to overlap while being shifted from each other in a convey direction, detecting positions of a plurality of abutting members which move upon coming into contact with at least one of a sheet and an object attached to a sheet, the plurality of abutting members being disposed side by side in a direction perpendicular to a sheet convey direction, and comparing a position of at least one abutting member with a position of another abutting member among the plurality of abutting member and detecting a sheet abnormality on the basis of a comparison result.

Brief Description of the Drawings

[0008]

Fig. 1 is a side view of a sheet-fed rotary printing press to which a sheet abnormality detection apparatus according to the first embodiment of the present invention is applied;

Fig. 2 is a side view of the main part to explain movement of a suction device in the feeder of the sheet-fed rotary printing press shown in Fig. 1;

Fig. 3 is a view seen from the direction of an arrow III in Fig. 2;

Fig. 4 is a rear view of the main part to explain movement of a side separator in the feeder of the sheet-fed rotary printing press shown in Fig. 1;

Fig. 5 is a view seen from the direction of an arrow V in Fig. 4;
Fig. 6 is a rear view of the main part to explain movement of a side lay device in the sheet-fed rotary printing press shown in Fig. 1;
Fig. 7 is a rear view of the main part to explain movement of a suction device in the sheet-fed rotary printing press shown in Fig. 1;
Fig. 8 is a view seen from the direction of an arrow VIII in Fig. 7;
Fig. 9 is a side view showing the main part of a delivery unit in the sheet-fed rotary printing press shown in Fig. 1;
Fig. 10 is a plan view of the main part to explain movement of a side jogger device in the sheet-fed rotary printing press shown in Fig. 1;
Fig. 11 is a view seen from the direction of an arrow VI in Fig. 10;
Fig. 12 is a plan view of the sheet abnormality detection apparatus according to the first embodiment of the present invention;
Fig. 13 is a view seen from the direction of an arrow XIII in Fig. 12;
Fig. 14 is a sectional view taken along line XIV - XIV in Fig. 12;
Fig. 15 is a sectional view taken along the line XV - XV in Fig. 14;
Fig. 16A is a view seen from the direction of an arrow XVIA in Fig. 14;
Fig. 16B is a view seen from the direction of an arrow XVIB in Fig. 16A;
Fig. 17A is a view seen from the direction of an arrow XVIIA in Fig. 14;
Fig. 17B is a view seen from the direction of an arrow XVIIB in Fig. 17A;
Figs. 18A to 18D are model views to explain that when sheets are being conveyed to overlap while being shifted from each other in the convey direction in the sheet abnormality detection apparatus according to the first embodiment of the present invention, the preset sheet count which serves as the criterion of judging overlap feed changes depending on the sheet convey interval and the sheet size in the circumferential direction;
Fig. 19 is a side view of the main part showing the first modification of an abnormality detection unit in the first embodiment of the present invention;
Fig. 20 is a side view of the main part showing the second modification of the abnormality detection unit in the first embodiment of the present invention;
Fig. 21 is a side view of the main part showing the third modification of the abnormality detection unit in the first embodiment of the present invention;
Fig. 22 is a side view of the main part art showing the fourth modification of the abnormality detection unit in the first embodiment of the present invention;
Fig. 23 is a view of a sheet abnormality detection apparatus according to the second embodiment of the present invention and corresponds to a sectional view taken along the line XIV - XIV in Fig. 12;
Fig. 24 is a sectional view showing the main part of the sheet abnormality detection apparatus according to the second embodiment of the present invention;
Fig. 25 is a sectional view taken along the line XXV - XXV in Fig. 24;
Fig. 26 is a sectional view of the main part to explain the detection state in the second embodiment of the present invention;
Fig. 27 is a graph to explain a change in light reception amount of a photoelectric sensor which is caused by a positional shift of a first detection roller and that of the second detection roller relative to each other in the second embodiment of the present invention;
Fig. 28A is a plan view of a sheet abnormality detection apparatus according to the third embodiment of the present invention;
Fig. 28B is a sectional view taken along the line XXVIIIB - XXVIIIB in Fig. 28A;
Fig. 28C is a sectional view taken along the line XXVIIIC - XXVIIIC in Fig. 28B;
Fig. 28D is a sectional view taken along the line XXVIIID - XXVIIID in Fig. 28B;
Fig. 29A is a plan view showing a modification of the sheet abnormality detection apparatus according to the third embodiment of the present invention;
Fig. 29B is a sectional view taken along the line XXIXB - XXIXB in Fig. 29A;
Fig. 29C is a sectional view taken along the line XXIXC - XXIXC in Fig. 29B;
Fig. 29D is a sectional view taken along the line XXIXD - XXIXD in Fig. 29B;
Fig. 30 is a plan view of a sheet abnormality detection apparatus according to the fourth embodiment of the present invention;
Fig. 31A is a front view showing the left half of the first detecting portion in Fig. 30;
Fig. 31B is a front view similarly showing the right half of the first detecting portion in Fig. 30;
Fig. 32 is a plan view showing a modification of the sheet abnormality detection apparatus according to the fourth embodiment of the present invention;
Fig. 33 is a block diagram showing the configuration of the main part of a sheet-fed rotary printing press to which a

sheet abnormality detection apparatus according to the fifth embodiment of the present invention is applied;
Fig. 34A is a plan view showing the left half of a sheet abnormality detection apparatus according to the sixth embodiment of the present invention;
Fig. 34B is a plan view similarly showing the right half of the sheet abnormality detection apparatus according to the sixth embodiment of the present invention;
Fig. 35 is a view seen from the direction of an arrow XXXV in Fig. 34A;
Fig. 36 is a sectional view taken along the line XXXVI - XXXVI in Fig. 35;
Fig. 37 is a view seen from the direction of an arrow XXXVII in Fig. 35;
Fig. 38 is a side view showing the distal end of a feeder board according to the sixth embodiment of the present invention;
Fig. 39 is a block diagram of a printing press controller connected to the sheet abnormality detection apparatus according to the sixth embodiment of the present invention;
Fig. 40 is a block diagram of the sheet abnormality detection apparatus according to the sixth embodiment of the present invention;
Fig. 41 is a view showing the memory contents of a storage in the printing press controller shown in Fig. 39;
Figs. 42A and 42B are views showing the memory contents of the storage in the sheet abnormality detection apparatus shown in Fig. 40;
Figs. 43A to 43F are flowcharts showing the procedure of the operation of the printing press controller to detect a sheet abnormality in the sixth embodiment of the present invention;
Figs. 44A to 44U are flowcharts showing the procedure of the operation of the sheet abnormality detection apparatus to detect the sheet abnormality in the sixth embodiment of the present invention; and
Fig. 45 is a block diagram showing functions that are implemented by the CPU of the sheet abnormality detection apparatus in Fig. 40.

Description of the Preferred Embodiments

[0009] The embodiments of the present invention will be described with reference to the accompanying drawings.

First Embodiment

[0010] The first embodiment of the present invention will be described with reference to Figs. 1 to 18D.

[0011] A sheet-fed rotary printing press 1 serving as a sheet processing machine entirely shown in Fig. 1 mainly comprises a feeder 4, side lay devices 5A and 5B, a printing unit 6, and a delivery unit 9. The feeder 4 is a sheet feeder which supplies stacked sheets 2 one by one onto a feeder board 3 serving as a guide member.
The side lay devices 5A and 5B are registers which register the sheet 2 supplied onto the feeder board 3 in the lateral direction. The printing unit 6 comprises printing units 6A to 6D serving as four sets of sheet processing devices which print the supplied sheet 2.
The delivery unit 9 is a sheet delivery unit to which the printed sheet 2 is delivered, and comprises suction wheels 7 serving as sheet decelerating devices and a side jogger 8 serving as a sheet jogging device.

[0012] The feeder 4 comprises a suction device 10 and side separator 11. The suction device 10 is a sheet supply device which draws the stacked sheets 2 one by one and feeds the drawn sheet 2 onto the feeder board 3. The side separator 11 is a separating device to blow separating air to the stacked sheets 2 from the side to smoothly separate the stacked sheets 2 in order to slightly move the sheet 2, so that a first suction port 13 (to be described later) can draw a separated sheet.

[0013] A means for moving the suction device 10 in the directions of arrows A and B (the circumferential direction of the sheet) in accordance with the size of the sheet 2 in the circumferential direction will be described with reference to Figs. 2 and 3. The circumferential direction of the sheet coincides with the sheet convey direction, and the lateral direction of the sheet is perpendicular to the sheet convey direction.

[0014] As shown in Fig. 2, the suction device 10 comprises the first suction port 13, a second suction port 14, and a leveling foot 15 which are supported by a suction box 12. Of these members, the first suction port 13 is supported to be vertically movable in the vertical direction (a direction perpendicular to the sheet surface) of the stacked sheet 2, and the second suction port 14 is supported to be movable in the directions of the arrows A and B.

[0015] The leveling foot 15 is supported to be movable in the vertical direction of the stacked sheet 2 and the directions of the arrows A and B. The leveling foot 15 enters between the uppermost sheet 2 drawn by the first suction port 13 and a sheet 2 under the uppermost sheet 2 to press the lower sheet 2 and blow separating air, thus separating the uppermost sheet 2 entirely from the lower sheet 2.

[0016] In this arrangement, after the first suction port 13 that has moved downward draws the uppermost sheet 2 and moved upward, when the second suction port 14 draws the sheet, the first suction port 13 releases the sheet 2. The

sheet 2 transferred from the first suction port 13 to the second suction port 14 is conveyed to the feeder board 3 as the second suction port 14 moves in the direction of the arrow A (sheet convey direction). When the second suction port 14 releases the sheet 2, the sheet 2 is fed onto the feeder board 3.

[0017] Referring to Fig. 2, a pair of guide members 16 (one guide member 16 is not illustrated) are fixed to a feed frame 17 (see Fig. 1) and extend in the directions of the arrows A and B. A suction box motor (sheet supplying/moving means) 19 is attached to a support plate 18 supported at the ends of the guide members 16 in the direction of the arrow A. A screw rod 20 extends in the directions of the arrows A and B and is provided with a threaded portion 20a to run from the central portion in the direction of the arrow B. A support piece 21 supported at the ends of the guide members 16 in the direction of the arrow B, and the support plate 18 support the screw rod 20 to be rotatable while being regulated from moving in the axial direction.

[0018] A gear 22 and worm 23 are axially mounted on the end of the screw rod 20 in the direction of the arrow A. Rotation of a gear 24 axially mounted on the output shaft of the suction box motor 19 is transmitted to the gear 22 through a gear 25. The worm 23 meshes with a worm wheel 26. A potentiometer (sheet supply position detection means) 28 is axially mounted on a shaft 27 that rotates integrally with the worm wheel 26.

[0019] Moving bodies 29 and 30 support the suction box 12. One moving body 29 threadably engages with the threaded portion 20a of the screw rod 20, and the other moving body 30 is supported by the guide members 16 to be movable in the directions of the arrows A and B. Therefore, when driving the suction box motor 19 in one direction, the screw rod 20 rotates in one direction through the gears 24, 25, and 22, and the suction device 10 moves in the direction of the arrow A. When driving the suction box motor 19 in the other direction opposite to the one direction, the screw rod 20 rotates in the other direction through the gears 24, 25, and 22, and the suction device 10 moves in the direction of the arrow B.

[0020] A means for moving the side separator 11 in the lateral direction (directions of arrows C and D) of the sheet 2 in accordance with the size of the sheet 2 will be described with reference to Figs. 4 and 5. Referring to Fig. 5, a motor support member 33 is fixed to the feed frame 17. A side separator motor 34 is attached to the motor support member 33. The motor support member 33 supports a rack 35 to be movable in the directions of the arrows C and D.

[0021] The rack 35 meshes with two pinions 36 and 37. One pinion 36 is axially mounted on the output shaft of the side separator motor (separating device moving means) 34. As shown in Fig. 4, a potentiometer (separating device position detection means) 39 is axially mounted on a shaft 38 that integrally rotates with the other pinion 37. A bar 49 extending in the directions of the arrows A and B is fixed to the end of the rack 35 in the direction of an arrow D. The side separator 11 is attached to the bar 49 through a bracket 41.

[0022] In this arrangement, when driving the side separator motor 34 in one direction, the pinion 36 rotates clockwise in Fig. 5 to move the rack 35 in the direction of the arrow D. Accordingly, the side separator 11 also moves in the direction of the arrow D. When driving the side separator motor 34 in the other direction opposite to the one direction, the pinion 36 rotates counterclockwise in Fig. 5 to move the rack 35 in the direction of an arrow C. Accordingly, the side separator 11 also moves in the direction of the arrow C.

[0023] A means for moving the side lay devices 5A and 5B in the lateral direction (directions of arrows C and D) of the sheet 2 in accordance with the size of the sheet 2 will be described with reference to Fig. 6. Referring to Fig. 6, a stay 40A horizontally extends between the pair of left and right frames 40. A pair of opposing support members 41A and 41B are cantilevered by the stay 40A. Side lay motors (register device moving means) 43A and 43B respectively comprising potentiometers (register device position detection means) 42A and 42B are attached to the support members 41A and 41B, respectively.

[0024] A screw rod 44A is axially supported by one frame 40 and the support member 41A to be rotatable while its movement in the axial direction is regulated. A gear 46A meshing with a gear 45A axially mounted on the output shaft of the side lay motor 43A is axially mounted on the end of the screw rod 44A in the direction of the arrow D. The screw rod 44B is axially supported between the other frame 40 and the support member 41B to be rotatable while its movement in the axial direction is regulated. A gear 46B meshing with a gear 45B axially mounted on the output shaft of the side lay motor 43B is axially mounted on the end of the screw rod 44B in the direction of the arrow C.

[0025] A guide rod 47 horizontally extends between the pair of left and right frames 40 and supports the side lay devices 5A and 5B to be movable in the directions of the arrows C and D. Moving elements 48A and 48B fixed to the lower portions of the side lay devices 5A and 5B threadably engage with the screw rods 44A and 44B, respectively.

[0026] In this arrangement, when driving the side lay motor 43A in one direction, the screw rod 44A rotates in one direction through the gears 45A and 45B to move the side lay device 5A in the direction of the arrow D. When driving the side lay motor 43B in one direction, the screw rod 44B rotates in the other direction through the gears 45B and 46B to move the side lay device 5B in the direction of the arrow C.

[0027] When driving the side lay motor 43A in the other direction opposite to the one direction, the screw rod 44A rotates in the other direction through the gears 45A and 46A to move the side lay device 5A in the direction of the arrow C. When driving the side lay motor 43B in the other direction opposite to the one direction, the screw rod 44B rotates in one direction through the gears 45B and 46B to move the side lay device 5B in the direction of the arrow D.

[0028] A means for moving the suction wheels 7 in the circumferential direction (directions of arrows A and B) of the sheet 2 in accordance with the size of the sheet 2 will be described with reference to Figs. 7 to 9. Referring to Fig. 7, a rail 51A having an inverted-L-shaped section is fixed to one delivery frame 50A, and a rail 51B having an inverted-L-shaped section is fixed to the other delivery frame 50B.

[0029] As shown in Fig. 8, the rails 51A and 51B extend in the directions of the arrows A and B. Chains 52A and 52B extending in the directions of the arrows A and B are fixed to the lower surfaces of the rails 51A and 51B, respectively.

[0030] A pair of left and right suction wheel support bodies 53A and 53B respectively form flat rectangular parallelepipeds, and are respectively supported by the rails 51A and 51B through guide wheels 54, which are pivotally supported above them, to be movable in the directions of the arrows A and B. A driving shaft 55 is rotatably supported between the pair of left and right suction wheel support bodies 53A and 5B. Sprockets 56 meshing with the chains 52A and 52B are axially mounted on those portions of the suction wheel support bodies 53A and 53B which are on the inner sides.

[0031] A suction wheel motor 57 is a sheet decelerating device moving means which is fixed to one suction wheel support body 53B and incorporates a potentiometer (sheet decelerating device position detection means) 57A. A bevel gear 58 axially mounted on the output shaft of the suction wheel motor 57 meshes with a bevel gear 59 axially mounted on the projecting end of the driving shaft 55 which projects through one suction wheel support body 53B. A support shaft 60 horizontally extending between the pair of left and right suction wheel support bodies 53A and 53B rotatably supports the suction wheels 7. A guide plate 61 guides the sheet 2 conveyed by a delivery chain 62 onto a delivery table 63. A pipe 64 supplies suction air to the suction wheels 7.

[0032] In this arrangement, when driving the suction wheel motor 57 in one direction, the sprockets 56 rotate clockwise in Fig. 8 through the bevel gears 58 and 59 and driving shaft 55 to move the suction wheel support bodies 53A and 53B in the direction of the arrow A.

When driving the suction wheel motor 57 in the other direction opposite to the one direction, the sprockets 56 rotate counterclockwise in Fig. 8 through the bevel gears 58 and 59 and driving shaft 55 to move the suction wheel support bodies 53A and 53B in the direction of the arrow B.

[0033] A means for moving the side jogger 8 in directions of arrows C and D in accordance with the size of the sheet 2 in the lateral direction will be described with reference to Figs. 10 and 11. Referring to Figs. 10 and 11, a stationary block 70 is attached to the delivery frame 50A.

[0034] A guide member 71 is supported to be movable in the directions of the arrows C and D (directions to come close to and separate from a delivery pile) with respect to the delivery frame 50A. The guide member 71 supports a rack member 72 to be movable in the directions of the arrows C and D. A tensile coil spring 74 suspends between the stationary block 70 and a pin 73 vertically extending from the guide member 71. The pulling force of the tensile coil spring 74 biases the guide member 71 in the direction of the arrow D.

[0035] A bracket 75 attached to the guide member 71 rotatably supports a cam follower 76, as shown in Fig. 11. The cam follower 76 is in contact with a cam surface 77a of a cam member 77 which is interlocked with the printing operation of the printing press to reciprocate in directions of arrows G and H (the vertical direction perpendicular to directions of arrows A and B and the directions of the arrows C and D). The guide member 71, tensile coil spring 74, pin 73, cam follower 76, and cam member 77 constitute a sheet jogging mechanism.

[0036] When the printing press starts printing operation, the cam member 77 reciprocates in the directions of the arrows G and H to move the guide member 71 in the directions of the arrow C through the cam follower 76 which rolls on the cam surface 77a of the cam follower 76, to separate from the delivery pile against the pulling force of the tensile coil spring 74. Then, the pulling force of the tensile coil spring 74 moves the guide member 71 in the direction of the arrow D to come into contact with the delivery pile. Hence, the guide member 71 finely moves repeatedly in the directions of the arrows C and D, so the side jogger 8 jogs the sheets 2 in the lateral direction.

[0037] Referring to Fig. 10, a side jogger motor 78 is a sheet jogging device moving means which moves the side jogger 8 in the directions of the arrows C and D in accordance with the size of the sheets 2 in the lateral direction. The side jogger motor 78 is attached to the guide member 71, and a pinion 79 is axially mounted on the output shaft of the side jogger motor 78. A rack 80 meshing with the pinion 79 and extending in the directions of the arrows C and D is attached to the rack member 72. The side jogger 8 is attached to the end of the rack member 72 in the direction of the arrow D through a bracket 81. The side jogger motor 78 incorporates a potentiometer (jogging device position detection means) 78A.

[0038] In this arrangement, when driving the side jogger motor 78 in one direction, the pinion 79 rotates clockwise in Fig. 11 to move the rack member 72 in the direction of the arrow D through the rack 80 meshing with the pinion 79, so the side jogger 8 is adjusted to match the sheet 2 having a small size in the lateral direction. When driving the side jogger motor 78 in the other direction opposite to the one direction, the pinion 79 rotates counterclockwise in Fig. 11 to move the rack member 72 in the direction of the arrow C through the rack 80 meshing with the pinion 79, so the side jogger 8 is adjusted to match the sheet 2 having a large size in the lateral direction.

[0039] Referring to Fig. 1, each of the printing units 6A to 6D comprises an impression cylinder 83 which conveys the sheet 2, a blanket cylinder 84 which opposes the impression cylinder 83, and a plate cylinder 85 which opposes the

blanket cylinder 84 and to which ink and water are supplied respectively from an inking device and dampening unit (neither is shown). Transfer cylinders 86 are provided among the impression cylinders 83 of the respective printing units 6A to 6D, and a delivery cylinder 87 opposes the impression cylinder 83 of the fourth-color printing unit 6D. The delivery cylinder 87 comprises a sprocket 88. A delivery chain 62 is looped between the sprocket 88 and a sprocket 89 which is axially supported at the ends of the delivery frames 50A and 50B.

[0040] In this arrangement, the suction device 10 supplies the sheets 2 stacked on the feeder 4 onto the feeder board 3 one by one, and the side lay devices 5A and 5B register the supplied sheet 2 in the lateral direction. The sheet 2 is gripping-changed from a swing arm shaft pregripper (not shown) provided at the downstream end of the feeder board 3 in the sheet convey direction to the impression cylinder 83 of the first-color printing unit 6A, and the first-color printing unit 6A prints the sheet 2.

[0041] The sheet 2 which has been printed with the second to fourth colors by the printing units 6B to 6D is gripping changed from the impression cylinder 83 of the fourth-color printing unit 6D to a gripper unit (not shown) provided to the delivery chain 62. The suction wheels 7 decelerate the sheet 2 which is conveyed by the delivery chain 62 as it is gripped by the gripper unit. When the gripper unit releases the sheet 2, the side jogger 8 jogs the sheet 2 in the lateral direction. Then, the sheet 2 is dropped onto the delivery table 63 and stacked there.

[0042] A sheet abnormality detection apparatus as the characteristic feature of this embodiment will be described with reference to Figs. 12 to 18D. Referring to Fig. 12, a guide plate 90 guides the sheet 2 when feeding the sheets 2 drawn by the suction device 10 one by one onto the feeder board 3. Feed frames 17A and 17B rotatably support the two ends of a feed roller 91. Belts 92 and 93 which convey the sheet 2 fed onto the feeder board 3 are looped between the feed roller 91 and a roller (not shown) provided to the printing press.

The feed roller 91, the roller of the printing press, and the belts 92 and 93 constitute a sheet convey means.

[0043] As shown in Fig. 13, a pair of studs 94 stand upright at the two ends of the feeder board 3. Bolts 96a attach a stay 95, extending in directions of arrows C and D, to the studs 84 through bars 96. Four stationary holders 97, 98, 99, and 100 each extending in the vertical direction in Fig. 13 are attached to the center of the stay 95 at intervals in the directions of the arrows C and D.

[0044] An abnormality detection apparatus 101 is provided upstream of the feeder board 3 in the sheet convey direction, as shown in Fig. 1, and comprises first and second eccentric shafts 105 and 135, first and second detection rollers 112 and 142, and first and second sensor-attached ball plungers 174 and 130, as shown in Fig. 14. The first detection roller 112 is the first abutting member rotatably supported by the first eccentric shaft 105. The second detection roller 142 is the second abutting member adjacent to the first detection roller 112 and rotatably supported by the second eccentric shaft 135. The first and second sensor-attached ball plungers (abnormality detection means) 174 and 130 detect a shift of the first detection roller 112 and that of the second detection roller 142 relative to each other.

[0045] The first eccentric shaft 105 integrally has end shafts 106 and 107 provided at its two ends and large-diameter portions 108 provided at the inner sides of the end shafts 106 and 107, respectively. The large-diameter portions 108 have axes G2 eccentric from axes G1 of the end shafts 106 and 107 by an eccentric amount δ. The stationary holders 97 and 98 rotatably support the end shafts 106 and 107 of the first eccentric shaft 105 the through bearings 110 and 111, respectively.

[0046] The first detection roller 112 is one cylindrical abutting member, and is rotatably supported by the large-diameter portions 108 of the first eccentric shaft 105 through bearings 113. Bolts 116 fix flat rectangular parallelepiped support bodies 115 to the stationary holder 97. A bolt 117 is provided with a flange 117a at its distal end. As the bolt 117 threadably engages with the corresponding support body 115, a nut 118 fixes the bolt 117 to the support body 115.

[0047] Referring to Fig. 16A, a bolt 121 fixes one end portion 120a of a swing body 120 to an extending portion 106a of one end shaft 106 of the first eccentric shaft 105 by split clamp. As shown in Fig. 16B, a pin 122 having a blind hole 122a horizontally extends between two other end portions 122b of the Y-shaped swing body 120.

[0048] A bolt 123 is a stopper threadably engaging with the support body 115. The head of the bolt 121 abuts against the projecting end of the bolt 123 projecting from the support body 115 with the spring force of a compression coil spring 125 (to be described later). The projecting amount of the bolt 123 from the support body can be adjusted, so the bolt 123 adjusts the position of the first detection roller 112, as will be described later. A nut 124 fixes the bolt 123 to the support body 115.

[0049] The compression coil spring 125 is elastically mounted between the flange 117a of the bolt 117 and the bottom of the blind hole 122a of the pin 122. The spring force of the compression coil spring 125 biases the first detection roller 112 through the swing body 120 clockwise (the direction of an arrow E) about the axis G1 of the first eccentric shaft 105 as the pivot center, i.e., in a direction to press the sheet. As described above, the axes G2 of the large-diameter portions 108 which rotatably support the first detection roller 112 are eccentric from the axis G1 of the first eccentric shaft 105 by the eccentric amount δ.

[0050] Therefore, when the sheet 2 passes between the first detection roller 112 and the opposing feed roller 91 and the thickness of the sheet 2 raises the first detection roller 112 upward, the first detection roller 112 pivots counterclockwise (the direction of an arrow F) about the axis G1 as the pivot center along the locus of a radius δ, i.e., vertically upward

with respect to the sheet surface, against the spring force of the compression coil spring 125. Hence, the first eccentric shaft 105 also pivots counterclockwise integrally.

[0051] When adjusting the gap between the first detection roller 112 and feed roller 91 by the thickness of the sheet 2, the bolt 123 is moved forward/backward to adjust the position of its projecting end from the support body 115. More specifically, when the bolt 123 moves forward toward the swing body 120, the first detection roller 112 pivots in the direction of the arrow F about the axis G1 as the pivot center along the locus of the radius δ against the spring force of the compression coil spring 125. This increases the gap between the first detection roller 112 and feed roller 91.

[0052] When the bolt 123 moves backward from the swing body 120, the spring force of the compression coil spring 125 pivots the first detection roller 112 in the direction of the arrow E about the axis G1 as the pivot center along the locus of the radius δ. This decreases the gap between the first detection roller 112 and feed roller 91. Hence, the bolt 121, bolt 123, swing body 120, and compression coil spring 125 constitute a detecting position adjusting unit (detecting position adjusting means) 126 serving as the abutting member position adjusting means which adjusts the position of the first detection roller 112, i.e., the gap between the first detection roller 112 and feed roller 91.

[0053] The other end shaft 107 of the first eccentric shaft 105 extends in the direction of the arrow C, as shown in Fig. 14, to form an extending portion 107a. A bolt 129 fixes an almost parallelepiped second sensor holder 128 to the extending portion 107a.

[0054] Referring to Fig. 15, the distal end of the second sensor-attached ball plunger 130 is provided with a ball 130a serving as a detection element which is supported to be movable forward/backward and is biased by a biasing unit serving as a biasing means (not shown) in a forward direction. The second sensor-attached ball plunger 130 is a press switch serving as a press detection sensor and has a thread 130b on its outer surface. When the ball 130a is pressed and the second sensor-attached ball plunger 130 moves backward against the biasing unit, a sensor serving as an incorporated detector of the plunger 130 is turned on. The thread 130b of the second sensor-attached ball plunger 130 threadably engages in a screw hole 128b of the second sensor holder 128, and is fixed to the second sensor holder 128 by a nut 131, so that the ball 130a projects from an opposite surface 128a of the second sensor holder 128.

[0055] Referring to Fig. 14, the second eccentric shaft 135 integrally has end shafts 136 and 137 provided at its two ends and large-diameter portions 138 provided at the inner sides of the end shafts 136 and 137, respectively. The large-diameter portions 138 have axes G2 eccentric from axes G1 of the end shafts 136 and 137 by an eccentric amount δ.

[0056] The stationary holders 99 and 100 rotatably support the end shafts 136 and 137 of the second eccentric shaft 135 through bearings 140 and 141, respectively. The axes of the end shafts 136 and 137 of the second eccentric shaft 135 and the axes of the end shafts 106 and 107 of the first eccentric shaft 105 described above are located on one straight line in the directions of the arrows C and D.

[0057] The second detection roller 142 is the other cylindrical abutting member, and is rotatably supported by the large-diameter portions 138 of the second eccentric shaft 135 through bearings 143. A bolt 146 fixes a flat rectangular parallelepiped support body 145 to the stationary holder 100. A bolt 147 is provided with a flange 147a at its distal end. As the bolt 147 threadably engages with the support body 145, a nut 148 fixes the bolt 147 to the support body 145.

[0058] Referring to Fig. 17A, a bolt 151 fixes one end portion 150a of a swing body 150 to an extending portion 136a of one end shaft 136 of the second eccentric shaft 135 by split clamp. As shown in Fig. 17B, a pin 152 having a blind hole 152a horizontally extends between two other end portions 152b of the Y-shaped swing body 150.

[0059] A bolt 153 is a stopper threadably engaging with the support body 145. The head of the bolt 151 abuts against the projecting end of the bolt 153 projecting from the support body 145 with the spring force of a compression coil spring 155 (to be described later). The projecting amount of the bolt 153 from the support body 145 can be adjusted, so the bolt 153 adjusts the position of the second detection roller 142, as will be described later. A nut 154 fixes the bolt 153 to the support body 145.

[0060] The compression coil spring 155 is elastically mounted between the flange 147a of the bolt 147 and the bottom of the blind hole 152a of the pin 152. The spring force of the compression coil spring 155 biases the second detection roller 142 through the swing body 150 counterclockwise (the direction of an arrow E) about the axis G1 of the second eccentric shaft 135 as the pivot center. As described above, the axes G2 of the large-diameter portions 138 which rotatably support the second detection roller 142 are eccentric from the axis G1 of the second eccentric shaft 135 by the eccentric amount δ.

[0061] Therefore, when the sheet 2 passes between the second detection roller 142 and the opposing feed roller 91 and the thickness of the sheet 2 raises the second detection roller 142 upward, the second detection roller 142 pivots clockwise (the direction of an arrow F) about the axis G1 as the pivot center along the locus of a radius δ against the spring force of the compression coil spring 155. Hence, the second eccentric shaft 135 also pivots clockwise integrally.

[0062] When adjusting the gap between the second detection roller 142 and feed roller 91 by the thickness of the sheet 2, the bolt 153 is moved forward/backward to adjust the position of its projecting end from the support body 145. More specifically, when the bolt 153 moves forward toward the swing body 150, the second detection roller 142 pivots in the direction of the arrow F about the axis G1 as the pivot center along the locus of the radius δ against the spring force of the compression coil spring 155. This increases the gap between the second detection roller 142 and feed roller 91.

[0063] When the bolt 153 is moved backward from the swing body 150, the spring force of the compression coil spring 155 pivots the second detection roller 142 in the direction of the arrow E about the axis G1 as the pivot center along the locus of the radius 8. This decreases the gap between the second detection roller 142 and feed roller 91. Hence, the bolt 151, bolt 153, swing body 150, and compression coil spring 155 constitute a detecting position adjusting unit (detecting position adjusting means) 156 serving as the abutting member position adjusting means which adjusts the position of the second detection roller 142, i.e., the gap between the second detection roller 142 and feed roller 91. The detecting position adjusting units 126 and 156 can not only adjust the gap with respect to the feed roller 91 but also align the first detection roller 112 and second detection roller 142.

[0064] A dog 157 serving as a detection target body attached to one end portion 150a of the swing body 150 constitutes an overlap feed detection unit (overlap feed detection means) 158 together with an overlap feed sensor 170 (to be described later). When the second detection roller 142 has moved by a distance equal to or more than a predetermined amount, the overlap feed detection unit 158 detects it.

[0065] Bolts 159 fix a support member 160 to the stationary holder 100. The support member 160 has a first support hole 160a and a second support hole 160c formed in the bottom of a recess 160b. A support body 161 is a rectangular parallelepiped and has a screw hole 161a. A cylindrical shaft portion 161b integrally formed with the support body 161 engages with the first support hole 160a of the support member 160. A washer 162 regulates the shaft portion 161b from coming off from the first support hole 160a.

[0066] An adjusting shaft 163 threadably engages with the screw hole 161a of the support body 161 with its threaded portion 163a. Nuts 164 and 165 threadably engaging with the threaded portion 163a fix the adjusting shaft 163 to the support body 161. A pivotal element 166 has a disc shape, and a cylindrical portion 166a having a screw hole in its inner surface projects from the center of the pivotal element 166, as shown in Fig. 14. The cylindrical portion 166a is fitted in the second support hole 160c of the support member 160, and a washer 167 and a spring washer are interposed between the head of a bolt 168 threadably engaging with the screw hole of the cylindrical portion 166a and the bottom of the recess 160b. Thus, the pivotal element 166 is supported by the support member 160 to be rotatable about the bolt 168 as the rotation center. The distal end of the adjusting shaft 163 is pivotally mounted on part of the outer surface of the pivotal element 166 through a pin 169.

[0067] The overlap feed sensor 170 is an overlap feed detector attached to the pivotal element 166. Upon detection of the movement of the dog 157 by a predetermined amount or more, the overlap feed sensor 170 detects that overlapping sheets in a number equal to or more than a predetermined number are fed to the portion between the detection roller 142 and feed roller 91. The distal end of the overlap feed sensor 170 forms a Y shape, and a detecting portion 170a is arranged in a groove 171a in the Y-shaped distal end. The detecting portion 170a comprises a light-projecting unit arranged on one side of the Y-shaped distal end and a light-receiving unit arranged on the other side. The dog 157 is located in the groove 171a of the Y-shaped distal end. The dog 157 does not reach the portion between the light-projecting unit and light-receiving unit in a normal state, and reaches between them when overlap feed occurs.

[0068] As described, when the overlapping sheets 2 are sent to the portion between the detection roller 142 and feed roller 91, the thickness of the overlapping sheets 2 raises the second detection roller 142 upward by more than a predetermined amount. Thus, the second detection roller 142 pivots clockwise (the direction of the arrow F) about the axis G1 as the pivot center along the locus of the radius δ against the spring force of the compression coil spring 155. Hence, the eccentric shaft 135 also pivots clockwise. As the eccentric shaft 135 pivots clockwise, the swing body 150 also pivots clockwise integrally. At this time, the dog 157 enters between the light-projecting unit and light-receiving unit of the detecting portion 170a of the overlap feed sensor 170 to shield light to be received by the light-receiving unit. So-called overlap feed in which the overlapping sheets 2 in a number exceeding a preset sheet count are sent is detected from a change in light reception state of the light-receiving unit. Alternatively, the dog 157 normally shields the light between the light-projecting unit and light-receiving unit. When the dog 157 moves for a predetermined amount or more, the light-receiving unit receives light from the light-projecting unit. This structure can also detect overlap feed.

[0069] In overlap feed detection, when the sheets 2 are conveyed to overlap while being shifted from each other in the convey direction, the preset sheet count serving as the criterion of judging overlap feed changes depending on the convey interval of the sheets 2 and the size of the sheets 2 in the circumferential direction. This will be explained with reference to Figs. 18A to 18D.

[0070] Fig. 18A shows a case in which a size L1 in the circumferential direction of each of sheets 2a and 2b to be conveyed and a convey interval 1 of the sheets 2 satisfy $1 < L1 < 21$. In this case, the sheets 2a and 2b are conveyed in a double overlapping manner such that the trailing edge of the first sheet 2a overlaps the leading edge of the second sheet 2b.

[0071] Hence, in this case, the overlap feed detection unit 158 is adjusted not to detect overlap feed when two overlapping sheets are conveyed but to detect overlap feed when three or more overlapping sheets are conveyed between the second detection roller 142 and feed roller 91. Namely, in this case, the preset sheet count serving as the criterion of judging overlap feed is 2.

[0072] Fig. 18B shows a case in which a size L2 in the circumferential direction of each of sheets 2a and 2b to be

conveyed and a convey interval 1 of the sheets 2 satisfy L2 = 21. In this case, the sheets 2a and 2b are conveyed in a double overlapping manner such that the trailing edge of the first sheet 2a overlaps the leading edge of the second sheet 2b, but the third sheet 2c does not overlap the first sheet 2a.

[0073] Hence, in this case as well, the overlap feed detection unit 158 is adjusted not to detect overlap feed when two overlapping sheets are conveyed but to detect overlap feed when three or more overlapping sheets are conveyed between the second detection roller 142 and feed roller 91. Namely, in this case, the preset sheet count serving as the criterion of judging overlap feed is 2.

[0074] Fig. 18C shows a case in which a size L3 in the circumferential direction of each of sheets 2a, 2b, and 2c to be conveyed and a convey interval 1 of the sheets 2 satisfy L3 = 31. In this case, the sheets 2a, 2b, and 2c are conveyed in a triple overlapping manner such that the trailing edge of the first sheet 2a, the center of the second sheet 2b, and the leading edge of the third sheet 2c overlap.

[0075] Hence, in this case, the overlap feed detection unit 158 is adjusted not to detect overlap feed when three overlapping sheets are conveyed but to detect overlap feed when four or more overlapping sheets are conveyed between the second detection roller 142 and feed roller 91. Namely, in this case, the preset sheet count serving as the criterion of judging overlap feed is 3.

[0076] Fig. 18D shows a case in which a size L4 in the circumferential direction of each of sheets 2a, 2b, 2c, and 2d to be conveyed and a convey interval 1 of the sheets 2 satisfy L4 > 31. In this case, the sheets 2a, 2b, 2c, and 2d are conveyed in a quadruple overlapping manner such that the trailing edge of the first sheet 2a, the trailing edge of the second sheet 2b, the center of the third sheet 2c, and the leading edge of the fourth sheet 2d overlap.

[0077] Hence, in this case, the overlap feed detection unit 158 is adjusted not to detect overlap feed when four overlapping sheets are conveyed but to detect overlap feed when five or more overlapping sheets are conveyed between the second detection roller 142 and feed roller 91. Namely, in this case, the preset sheet count serving as the criterion of judging overlap feed is 4.

[0078] The overlap feed detection unit 158 is adjusted in the following manner. Referring to Fig. 17A, the nuts 164 and 165 are released, and the adjusting shaft 163 is rotated clockwise or counterclockwise. As the screw hole 161a of the support body 161 threadably engages with the threaded portion 163a, the adjusting shaft 163 moves with respect to the support body 161 in directions of arrows I and J, i.e., in a direction perpendicular to the sheet convey direction. Upon movement of the adjusting shaft 163, the pivotal element 166 pivots clockwise or counterclockwise about the bolt 168 as the pivot center. Consequently, the detecting portion 170a of the overlap feed sensor 170 comes close to or separates from the dog 157. In this manner, the rotation of the adjusting shaft 163 can adjust the position of the dog 157 and that of the detecting portion 170a of the overlap feed sensor 170 relative to each other. The support body 161, adjusting shaft 163, and pivotal element 166 constitute an adjusting unit (adjusting means) 180.

[0079] The other end shaft 137 of the second eccentric shaft 135 extends in the direction of the arrow D, as shown in Fig. 14, to form an extending portion 137a. A bolt 173 fixes an almost parallelepiped first sensor holder 172 to the extending portion 137a.

[0080] Referring to Fig. 15, the distal end of the first sensor-attached ball plunger 174 is provided with a ball 174a serving as a detection element which is supported to be movable forward/backward and is biased by a biasing unit serving as a biasing means (not shown) in a forward direction. The first sensor-attached ball plunger 174 is a press switch serving as a press detection sensor and has a thread 174b on its outer surface. When the ball 174a is pressed and the plunger 174 moves backward against the biasing unit, a sensor serving as an incorporated detector of the plunger 174 is turned on. The thread 174b of the first sensor-attached ball plunger 174 threadably engages in a screw hole 172b of the first sensor holder 172, and is fixed to the first sensor holder 172 by a nut 175, so that the ball 174a projects from an opposite surface 172a of the first sensor holder 172.

[0081] The first sensor holder 172 opposes the second sensor holder 128. In the initial state in which the sheet 2 does not raise the first detection roller 112 and second detection roller 142 upward, the opposite surface 172a of the first sensor holder 172 opposes the opposite surface 128a of the second sensor holder 128 in a substantially parallel state through a gap. In this state, the ball 174a of the first sensor-attached ball plunger 174 does not engage with the opposite surface 128a of the second sensor holder 128 but is separate from it, so the first sensor-attached ball plunger 174 is OFF. Similarly, the ball 130a of the second sensor-attached ball plunger 130 does not engage with the opposite surface 172a of the first sensor holder 172 but is separates from it, so the second sensor-attached ball plunger 130 is OFF. The first and second sensor-attached ball plungers 174 and 130 constitute an abnormality detection unit (abnormality detection means) 177 which detects an abnormal state of the sheet 2. The abnormality detection unit 177 serves to detect a positional shift of the first detection roller 112 and that of the second detection roller 142 relative to each other in the direction of sheet thickness (a direction perpendicular to the sheet surface).

[0082] The operation of the abnormality detection apparatus 101 having the above arrangement to detect a sheet abnormal state will be described with reference to Figs. 14 to 18D. Table 1 represents the relationship between the respective abnormal states and the detection results of the respective sensors.

Table 1

	Type of Detection Sensor Abnormal State	First Sensor-Attached Ball Plunger	Second Sensor-Attached Ball Plunger	Overlap Feed Sensor
(A)	Detection of Folded Corner, Foreign Substance, or the Like on First Detection Roller Side in Normal Sheet Feed	o	-	-
(B)	Detection of Folded Corner, Foreign Substance, or the Like on Second Detection Roller Side in Normal Sheet Feed	-	o	o
(C)	Detection of Folded Corner, Foreign Substance, or the Like on First Detection Roller Side at Start or End of Sheet Feed	o	-	-
(D)	Detection of Folded Corner, Foreign Substance, or the Like on Second Detection Roller Side at Start or End of Sheet Feed	-	o	-
(E)	Detection of Overlap Feed	-	-	o

[0083] In the overlap feed detection unit 158, the position of the detecting portion 170a of the overlap feed sensor 170 with respect to the dog 157 is adjusted in advance in accordance with the preset sheet count serving as the criterion of judging overlap feed which is determined by the size of the sheet 2 in the circumferential direction with respect to the convey interval of the sheets 2 to be conveyed.

[0084] First, a case will be described in which the sheets 2 are conveyed normally with no folded corner, no attached foreign substance, or no overlap feed. In this case, when the sheet 2 fed from the feeder 4 onto the feeder board 3 passes between the first and second detection rollers 112 and 142 and the feed roller 91, the sheet 2 raises both the first detection roller 112 and second detection roller 142 upward by the same amount.

[0085] Therefore, the pivot amount of the first eccentric shaft 105 which pivots in the direction of an arrow F when the detection roller 112 is raised in Fig. 16A becomes equal to the pivot amount of the second eccentric shaft 135 which pivots in the direction of the arrow F when the second detection roller 142 is raised in Fig. 17A.

[0086] More specifically, in Fig. 15, the pivot amount of the second sensor holder 128 which pivots integrally with the first eccentric shaft 105 in the direction of an arrow F when the first eccentric shaft 105 pivots becomes equal to the pivot amount of the first sensor holder 172 which pivots integrally with the second eccentric shaft 135 in the direction of the arrow F when the second eccentric shaft 135 pivots.

[0087] Hence, in Fig. 15, the position of the first sensor holder 172 and that of the second sensor holder 128 relative to each other do not change from the positions in the initial state. Therefore, a state in which the ball 174a of the first sensor-attached ball plunger 174 does not engage with the opposite surface 128a of the second sensor holder 128 so the first sensor-attached ball plunger 174 is OFF is maintained. Similarly, a state in which the ball 130a of the second sensor-attached ball plunger 130 does not engage with the opposite surface 172a of the first sensor holder 172 so the second sensor-attached ball plunger 130 is OFF is maintained.

[0088] In this manner, if the first detection roller 112 and second detection roller 142 do not positionally shift relative to each other, an abnormal sheet feed is not detected by the first sensor-attached ball plunger 174 and second sensor-attached ball plunger 130.

[0089] In this case, as described above, overlap feed does not occur in the sheets 2, and a folded corner or an attached

foreign substance does not occur on the side of the second detection roller 142 which is provided with the overlap feed detection unit 158. Although the pivot motion of the second detection roller 142 in the direction of the arrow F pivots the dog 157 in the direction of the arrow F in Fig. 17A, the pivot amount of the dog 157 is equal to or less than the preset sheet count serving as the criterion of judging overlap feed. Thus, the dog 157 does not shield light emitted from the light-projecting unit to the light-receiving unit of the detecting portion 170a, so the overlap feed sensor 170 is not turned on and does not detect overlap feed.

[0090] An abnormal state in normal sheet feed, in which no overlap feed occurs and a folded corner or an attached foreign substance occurs on the first detection roller side, i.e., the abnormal state (A) in Table 1 will be described. In this case, as the sheet 2 fed from the feeder 4 onto the feeder board 3 passes between the first and second detection rollers 112 and 142 and the feed roller 91, the first detection roller 112 is raised to be higher than the second detection roller 142.

[0091] Therefore, the pivot amount of the first eccentric shaft 105 which pivots in the direction of the arrow F when the first detection roller 112 is raised in Fig. 16A becomes larger than the pivot amount of the second eccentric shaft 135 which pivots in the direction of the arrow F when the second detection roller 142 is raised in Fig. 17A.

[0092] More specifically, in Fig. 15, the pivot amount of the second sensor holder 128 which pivots integrally with the first eccentric shaft 105 in the direction of the arrow F when the first eccentric shaft 105 pivots becomes larger than the pivot amount of the first sensor holder 172 which pivots integrally with the second eccentric shaft 135 in the direction of the arrow F when the second eccentric shaft 135 pivots. Thus, the position of the first sensor holder 172 and that of the second sensor holder 128 relative to each other change from the positions in the initial state.

[0093] Therefore, in Fig. 15, the opposite surface 128a of the second sensor holder 128 presses the ball 174a of the first sensor-attached ball plunger 174 to turn on the first sensor-attached ball plunger 174. Meanwhile, the ball 130a of the second sensor-attached ball plunger 130 does not engage with the opposite surface 172a of the first sensor holder 172 so the OFF state of the second sensor-attached ball plunger 130 is maintained.

[0094] In this manner, the first sensor-attached ball plunger 174 detects the relative positional shift between the first detection roller 112 and second detection roller 142 in the direction of sheet thickness (the direction perpendicular to the sheet surface), thereby detecting an abnormal state in which a folded corner or an attached foreign substance occurs on the first detection roller side in the normal sheet feed.

[0095] In this case, as described above, overlap feed does not occur in the sheets 2, and a folded corner or an attached foreign substance is not present on the side of the second detection roller 142 which is provided with the overlap feed detection unit 158. Although the pivot motion of the second detection roller 142 in the direction of the arrow F pivots the dog 157 in the direction of the arrow F in Fig. 17A, the pivot amount of the dog 157 is equal to or less than the preset sheet count serving as the criterion of judging overlap feed. Thus, the dog 157 does not turn on the overlap feed sensor 170, and the overlap feed sensor 170 does not detect overlap feed.

[0096] An abnormal state in normal sheet feed, in which no overlap feed occurs and a folded corner or an attached foreign substance is present on the second detection roller side, i.e., the abnormal state (B) in Table 1 will be described. In this case, as the sheet 2 fed from the feeder 4 onto the feeder board 3 passes between the first and second detection rollers 112 and 142 and the feed roller 91, the second detection roller 142 is raised to be higher than the first detection roller 112.

[0097] Therefore, the pivot amount of the second eccentric shaft 135 which pivots in the direction of the arrow F when the second detection roller 142 is raised in Fig. 17A becomes larger than the pivot amount of the first eccentric shaft 105 which pivots in the direction of the arrow F when the first detection roller 112 is raised in Fig. 16A.

[0098] More specifically, in Fig. 15, the pivot amount of the first sensor holder 172 which pivots integrally with the second eccentric shaft 135 in the direction of the arrow F when the second eccentric shaft 135 pivots becomes larger than the pivot amount of the second sensor holder 128 which pivots integrally with the first eccentric shaft 105 in the direction of the arrow F when the first eccentric shaft 105 pivots. Thus, the position of the first sensor holder 172 and that of the second sensor holder 128 relative to each other change from the positions in the initial state.

[0099] Therefore, in Fig. 15, the opposite surface 172a of the first sensor holder 172 presses the ball 130a of the second sensor-attached ball plunger 130 to turn on the second sensor-attached ball plunger 130. Meanwhile, the ball 174a of the first sensor-attached ball plunger 174 does not engage with the opposite surface 128a of the second sensor holder 128 so the OFF state of the first sensor-attached ball plunger 174 is maintained.

[0100] In this manner, the second sensor-attached ball plunger 130 detects the relative positional shift between the first detection roller 112 and the second detection roller 142 in the direction of sheet thickness (the direction perpendicular to the sheet surface), thereby detecting an abnormal state in which a folded corner or an attached foreign substance is present on the second detection roller side in normal sheet feed.

[0101] In this case, as described above, although overlap feed does not occur in the sheets 2, a folded corner or an attached foreign substance is present on the side of the second detection roller 142 provided with the overlap feed detection unit 158. Therefore, when the second detection roller 142 pivots in the direction of the arrow F, the dog 157 pivots in the direction of the arrow F in Fig. 17A with a pivot amount that exceeds the upper limit of the preset sheet count serving as the criterion of judging overlap feed. Hence, the dog 157 shields light from the light-projecting unit to

the light-receiving unit of the detecting portion 170a to turn on the overlap feed sensor 170. As the second sensor-attached ball plunger 130 has been ON, however, the controller 101a of the abnormality detection apparatus 101 does not determine overlap feed.

[0102] An abnormal state at the start or end of sheet feed, in which no overlap feed occurs and a folded corner or an attached foreign substance is present on the first detection roller side, i.e., the abnormal state (C) in Table 1 will be described. In this case, as the sheet 2 fed from the feeder 4 onto the feeder board 3 passes between the first and second detection rollers 112 and 142 and the feed roller 91, the first and second detection rollers 112 and 142 are raised by an amount smaller than that in normal feed described above.

[0103] However, the relative positional shift between the first detection roller 112 and second detection roller 142 in the direction of sheet thickness (the direction perpendicular to the sheet surface) becomes equal to that in the abnormal state (A) in normal sheet feed described above. Hence, when the first sensor-attached ball plunger 174 detects this relative positional shift in the same manner as in the abnormal state (A), an abnormal state in which a folded corner or an attached foreign substance is present on the first detection roller side at the start or end of sheet feed is detected.

[0104] In this case, as described above, overlap feed does not occur in the sheets 2, and a folded corner or an attached foreign substance is not present on the side of the second detection roller 142 which is provided with the overlap feed detection unit 158. Thus, the dog 157 does not turn on the overlap feed sensor 170, and the overlap feed sensor 170 does not detect overlap feed, in the same manner as in the abnormal state (A).

[0105] An abnormal state at the start or end of sheet feed, in which no overlap feed occurs and a folded corner or an attached foreign substance occurs on the second detection roller side, i.e., the abnormal state (D) in Table 1 will be described. In this case, as the sheet 2 fed from the feeder 4 onto the feeder board 3 passes between the first and second detection rollers 112 and 142 and the feed roller 91, the first and second detection rollers 112 and 142 are raised by an amount smaller than that in normal feed described above.

[0106] However, the relative positional shift between the first detection roller 112 and second detection roller 142 in the direction of sheet thickness (the direction perpendicular to the sheet surface) becomes equal to that in the abnormal state (B) in normal sheet feed described above. Hence, when the second sensor-attached ball plunger 130 detects this relative positional shift in the same manner as in the abnormal state (B), an abnormal state in which a folded corner or an attached foreign substance is present on the second detection roller side at the start or end of sheet feed is detected.

[0107] At the start or end of sheet feed, the first and second detection rollers 112 and 142 are raised by the sheet 2 by an amount smaller than that in normal sheet feed described above. Therefore, even if the second detection roller 142 provided with the overlap feed detection unit 158 is raised by a folded corner or a foreign substance, the pivot amount of the dog 157 of the overlap feed detection unit 158 is equal to or less than the preset sheet count serving as the criterion of judging overlap feed. Thus, different from the abnormal state (B), the dog 157 does not turn on the overlap feed sensor 170, and the overlap feed sensor 170 does not detect overlap feed.

[0108] An abnormal state in which a folded corner or an attached foreign substance is not present and overlap feed occurs, i.e., the abnormal state (E) in Table 1 will be described. In this case, as the sheet 2 fed from the feeder 4 onto the feeder board 3 passes between the first and second detection rollers 112 and 142 and the feed roller 91, both the first and second detection rollers 112 and 142 are raised upward by the same amount. Therefore, the initial state in which both the first and second sensor-attached ball plungers 174 and 130 are OFF is maintained in the same manner as in the above case in which the sheet 2 is conveyed correctly.

[0109] The second detection roller 142 provided with the overlap feed detection unit 158 is raised by an amount larger than that in the case in which no overlap feed occurs. Hence, when the second detection roller 142 pivots in the direction of the arrow F, the dog 157 pivots in the direction of the arrow F in Fig. 17A with a pivot amount that exceeds the upper limit of the preset sheet count serving as the criterion of judging overlap feed. Thus, the dog 157 turns on the overlap feed sensor 170, thus detecting overlap feed.

[0110] The first and second sensor-attached ball plungers 174 and 130 and overlap feed sensor 170 are electrically connected to the controller 101a of the abnormality detection apparatus 101 shown in Fig. 1. The ON/OFF state of each of the first and second sensor-attached ball plungers 174 and 130 and overlap feed sensor 170 is output to the controller 101a. On the basis of each ON/OFF state, the controller 101a judges the presence of a folded corner and overlap feed in accordance with Table 1.

[0111] When the first and second detection rollers 112 and 142 are raised by a folded corner of a sheet or a foreign substance, as described above, the first and second eccentric shafts 105 and 135 pivot about their axes G1 as the pivot centers. Even if each of the first and second detection rollers 112 and 142 detects a folded corner of a sheet or a foreign substance at the two ends in the axial direction, the detection rollers 112 and 142 do not tilt in the axial direction, unlike in the conventional case, but the detection rollers 112 and 142 are raised entirely.

[0112] When the first and second detection rollers 112 and 142 are raised precisely by an amount corresponding to the height of the folded corner of the sheet or the foreign substance, the relative positional shift between the first detection roller 112 and second detection roller 142 in the direction of sheet thickness (the direction perpendicular to the sheet surface) can be detected accurately. This can prevent erroneous detection.

[0113] Since the first and second detection rollers 112 and 142 are not tilted in the axial direction but are raised entirely, rotations of the detection rollers 112 and 142 through the bearings 113 and 143 are not interfered. This allows smooth detection.

[0114] In the first embodiment, the overlap feed detection unit 158 is provided on the second detection roller 142 side. Alternatively, the overlap feed detection unit 158 is provided on the first detection roller 112 side, or on each of the sides of the first and second detection rollers 112 and 142.

Modifications of First Embodiment

[0115] Modifications of the abnormality detection unit 177 (the first sensor-attached ball plunger 174 and second sensor-attached ball plunger 130) which detects the relative positional shift between the first detection roller 112 and second detection roller 142 in the direction of sheet thickness (direction perpendicular to the sheet surface) of the first embodiment will be described with reference to Figs. 19 to 22. In Figs. 19 to 22, only main parts that are different from those of the first embodiment are shown, and other portions that are not shown are the same as those of the first embodiment.

[0116] Referring to Fig. 19, the extending portion 137a of the shaft end 137 of the second eccentric shaft 135 forms a ring. The extending portion 137a has a screw hole 137b extending in the radial direction to support the first sensor-attached ball plunger 174. The extending portion 107a of the end shaft 107 of the first eccentric shaft 105 is loosely inserted in the hollow portion of the extending portion 137a of the second eccentric shaft 135. A groove 107b (recess or hole) having a V-shaped section is formed in part of the outer surface of the extending portion 107a to correspond to the screw hole 137b.

[0117] The threaded portion 174b of the first sensor-attached ball plunger 174 is threadably engaged in the screw hole 137b of the second eccentric shaft 135, and a nut 181 threadably engaging with the thread 174b fixes the first sensor-attached plunger 174 to the second eccentric shaft 135 such that the ball 174a opposes the interior of the groove 107b.

[0118] In this arrangement, when the sheet 2 with a folded corner or to which a foreign substance is attached on the side of the first detection roller 112 rotatably supported by the first eccentric shaft 105 passes between the first and second detection rollers 112 and 142 and the feed roller 91, the sheet 2 raises the first detection roller 112 to be higher than the second detection roller 142, in the same manner as in the first embodiment described above.

[0119] Hence, the pivot angle of the extending portion 107a in the direction of an arrow F of the first eccentric shaft 105 of the first detection roller 112 becomes lager than the pivot angle of the extending portion 137a in the direction of an arrow F of the second eccentric shaft 135 of the second detection roller 142. Accordingly, the ball 174a of the first sensor-attached ball plunger 174 which opposes the groove 107b of the extending portion 107a disengages from the groove 107b and is pressed by the outer surface of the extending portion 107a to move backward in the first sensor-attached plunger 174. This turns on the first sensor-attached ball plunger 174.

[0120] In this manner, the relative positional shift between the first and second detection rollers 112 and 142 in the direction of sheet thickness (direction perpendicular to the sheet surface) appears as the relative positional shift between the ball 174a and groove 107b in the pivoting direction (the circumferential direction of the extending portion 107a). Thus, the first sensor-attached ball plunger 174 can detect a folded corner of a sheet or a foreign substance attached to a sheet occurring on the side of the first detection roller 112.

[0121] Similarly, when the sheet 2 with a folded corner or to which a foreign substance is attached on the side of the second detection roller 142 passes between the first and second detection rollers 112 and 142 and the feed roller 91, the sheet 2 raises the second detection roller 142 to be higher than the first detection roller 112. Hence, the pivot angle of the extending portion 137a in the direction of the arrow F of the second eccentric shaft 135 of the second detection roller 142 becomes lager than the pivot angle of the extending portion 107a in the direction of the arrow F of the first eccentric shaft 105 of the first detection roller 112.

[0122] Accordingly, the ball 174a of the first sensor-attached ball plunger 174 which opposes the groove 107b of the extending portion 107a disengages from the groove 107b and is pressed by the outer surface of the extending portion 107a to move backward in the first sensor-attached plunger 174. This turns on the first sensor-attached ball plunger 174. In this manner, one ball plunger, i.e., the first sensor-attached ball plunger 174 can detect a folded corner of a sheet or a foreign substance attached to a sheet occurring on the side of the first or second detection roller 112 or 142.

[0123] Referring to Fig. 20, a first pressure sensor 183 is a press sensor attached to one end of the opposite surface 172a of the first sensor holder 172, and opposes one end of the opposite surface 128a of the second sensor holder 128 at a small gap. A second pressure sensor 184 is a press sensor attached to the other end of the opposite surface 128a of the second sensor holder 128, and opposes the other end of the opposite surface 172a of the first sensor holder 172 at a small gap.

[0124] In this arrangement, when the sheet 2 with a folded corner or to which a foreign substance is attached on the side of the first detection roller 112 rotatably supported by the first eccentric shaft 105 passes between the first and

second detection rollers 112 and 142 and the feed roller 91, the sheet 2 raises the first detection roller 112 to be higher than the second detection roller 142, in the same manner as in the first embodiment described above.

[0125] Hence, the pivot amount of the first eccentric shaft 105 in the direction of the arrow F becomes lager than the pivot amount of the second eccentric shaft 135 in the direction of the arrow F. Consequently, the pivot amount of the second sensor holder 128 which pivots integrally with the first eccentric shaft 105 in the direction of the arrow F when the first eccentric shaft 105 pivots becomes larger than the pivot amount of the first sensor holder 172 which pivots integrally with the second eccentric shaft 135 in the direction of the arrow F when the second eccentric shaft 135 pivots.

[0126] Therefore, the opposite surface 128a of the second sensor holder 128 presses the first pressure sensor 183, so the first pressure sensor 183 detects this press, thus detecting an abnormal state in which a folded corner of a sheet or a foreign substance attached to a sheet occurs on the side of the first detection roller 112.

[0127] When a sheet 2 with a folded corner or to which a foreign substance is attached on the side of the second detection roller 142 rotatably supported by the second eccentric shaft 135 passes between the first and second detection rollers 112 and 142 and the feed roller 91, the sheet 2 raises the second detection roller 142 to be higher than the first detection roller 112.

[0128] Hence, opposite to the case in which the sheet 2 with a folded corner or to which a foreign substance is attached on the side of the first detection roller 112 passes, the opposite surface 172a of the first sensor holder 172 presses the second pressure sensor 184, so the pressure sensor 184 is actuated. Thus, an abnormal state in which a folded corner of a sheet or a foreign substance attached to a sheet is present on the side of the first detection roller 112 is detected.

[0129] In Fig. 20, the first pressure sensor 183 is attached to one end of the opposite surface 172a of the first sensor holder 172, that is, to an end which is in the opposite direction (direction E) to the direction (direction F) in which the first sensor holder 172 is pivoted by a folded corner or the like. Alternatively, the first pressure sensor 183 is attached to the other end of the opposite surface 172a, that is, to an end which is in the direction (direction F) in which the first sensor holder 172 is pivoted by a folded corner or the like. In this case, the second pressure sensor 184 is attached to one end of the opposite surface 128a of the second sensor holder 128, that is, an end in the direction (direction F) in which the second sensor holder 128 is pivoted by a folded corner or the like. With this arrangement, when a folded corner or the like is present on the side of the first detection roller 112, the second pressure sensor 184 is actuated. When a folded corner or the like is present on the side of the second detection roller 142, the first pressure sensor 183 is actuated.

[0130] Referring to Fig. 21, a first proximity sensor 186 is a detection means attached to one end of the opposite surface 172a of the first sensor holder 172, and opposes one end of the opposite surface 128a of the second sensor holder 128 at a gap. A second proximity sensor 187 is a detection means attached to the other end of the opposite surface 128a of the second sensor holder 128, and opposes the other end of the opposite surface 172a of the first sensor holder 172 at a gap.

[0131] In this arrangement, when the sheet 2 with a folded corner or to which a foreign substance is attached on the side of the first detection roller 112 rotatably supported by the first eccentric shaft 105 passes between the first and second detection rollers 112 and 142 and the feed roller 91, the sheet 2 raises the first detection roller 112 to be higher than the second detection roller 142.

[0132] Hence, the pivot amount of the first eccentric shaft 105 in the direction of the arrow F becomes lager than the pivot amount of the second eccentric shaft 135 in the direction of the arrow F. Consequently, the pivot amount of the second sensor holder 128 which pivots integrally with the first eccentric shaft 105 in the direction of the arrow F when the first eccentric shaft 105 pivots becomes larger than the pivot amount of the first sensor holder 172 which pivots integrally with the second eccentric shaft 135 in the direction of the arrow F when the second eccentric shaft 135 pivots.

[0133] Therefore, the first proximity sensor 186 comes close to the opposite surface 128a of the second sensor holder 128, so the first proximity sensor 186 is turned on. Thus, an abnormal state in which a folded corner of a sheet or a foreign substance attached to a sheet is present on the side of the first detection roller 112 is detected.

[0134] When a sheet 2 with a folded corner or to which a foreign substance is attached on the side of the second detection roller 142 rotatably supported by the second eccentric shaft 135 passes between the first and second detection rollers 112 and 142 and the feed roller 91, the sheet 2 raises the second detection roller 142 to be higher than the first detection roller 112.

[0135] Hence, opposite to the case in which the sheet 2 with a folded corner or to which a foreign substance is attached on the side of the first detection roller 112 passes, the second proximity sensor 187 comes close to the opposite surface 172a of the first sensor holder 172, so the second proximity sensor 187 is turned on. Thus, an abnormal state in which a folded corner of a sheet or a foreign substance attached to a sheet is present on the side of the first detection roller 112 is detected.

[0136] In Fig. 21, in the same manner as the pressure sensors 183 and 184 shown in Fig. 20, the first proximity sensor 186 may be attached to the other end of the opposite surface 172a of the first sensor holder 172, and the second proximity sensor 187 may be attached to one end of the opposite surface 128a of the second sensor holder 128.

[0137] Referring to Fig. 22, a distance detection sensor 188 is a detection means attached to one end of the opposite surface 128a of the second sensor holder 128, and opposes one end of the opposite surface 172a of the first sensor

holder 172 through a predetermined length Y. The distance detection sensor 188 detects abnormality in accordance with whether the gap with respect to the opposite surface 172a of the first sensor holder 172 is shorter or longer than the length Y.

[0138] In this arrangement, when the sheet 2 with a folded corner or to which a foreign substance is attached on the side of the first detection roller 112 rotatably supported by the first eccentric shaft 105 passes between the first and second detection rollers 112 and 142 and the feed roller 91, the sheet 2 raises the first detection roller 112 to be higher than the second detection roller 142.

[0139] Hence, the pivot amount of the first eccentric shaft 105 in the direction of an arrow F becomes lager than the pivot amount of the second eccentric shaft 135 in the direction of an arrow F. Consequently, the pivot amount of the second sensor holder 128 which pivots integrally with the first eccentric shaft 105 in the direction of the arrow F when the first eccentric shaft 105 pivots becomes larger than the pivot amount of the first sensor holder 172 which pivots integrally with the second eccentric shaft 135 in the direction of the arrow F when the second eccentric shaft 135 pivots.

[0140] Therefore, the distance detection sensor 188 becomes farther away from the opposite surface 172a of the first sensor holder 172. The distance detection sensor 188 accordingly detects that the distance with respect to the opposite surface 172a has become larger than the length Y. Thus, an abnormal state in which a folded corner of a sheet or a foreign substance attached to a sheet is present on the side of the first detection roller 112 is detected.

[0141] When a sheet 2 with a folded corner or to which a foreign substance is attached on the side of the second detection roller 142 rotatably supported by the second eccentric shaft 135 passes between the first and second detection rollers 112 and 142 and the feed roller 91, the sheet 2 raises the second detection roller 142 to be higher than the first detection roller 112.

[0142] Hence, opposite to the case in which the sheet 2 with a folded corner or to which a foreign substance is attached on the side of the first detection roller 112 passes, the distance detection sensor 188 comes close to the opposite surface 172a of the first sensor holder 172. The distance detection sensor 188 accordingly detects that the distance with respect to the opposite surface 172a has become shorter than the length Y. Thus, an abnormal state in which a folded corner of a sheet or a foreign substance attached to a sheet is present on the side of the second detection roller 142 is detected.

[0143] In Fig. 22, the distance detection sensor 188 is attached to one end of the opposite surface 128a of the second sensor holder 128, that is, to an end which is in the opposite direction (direction E) to the direction (direction F) in which the second sensor holder 128 is pivoted by a folded corner or the like. Alternatively, the distance detection sensor 188 is attached to the other end of the opposite surface 128a, that is, to an end which is in the direction (direction F) in which the second sensor holder 128 is pivoted by a folded corner or the like. In this case, when the distance detection sensor 188 detects that the distance with respect to the opposite surface 172a has become shorter and longer than the length Y, an abnormal state in which a folded corner of a sheet or a foreign substance attached to a sheet is present on the side of the first detection roller 112 and second detection roller 142, respectively, is detected.

Second Embodiment

[0144] The second embodiment of the present invention will be described with reference to Figs. 23 to 27. In Figs. 23 to 27, the same or equivalent members as those described in the first embodiment shown in Fig. 14 described above are denoted by the same reference numerals, and a repetitive detailed description thereof will be omitted where appropriately.

[0145] The second embodiment is different from the first embodiment described above in that the relative positional displacement between a first detection roller 112 and second detection roller 142 in the direction of sheet thickness (direction perpendicular to the sheet surface) is detected on the basis of the light reception amount of a photoelectric sensor serving as a detection means.

[0146] As shown in Fig. 24, a screw hole 107b is formed in part of the outer surface of an extending portion 107a of a first eccentric shaft 105 to extend in the radial direction, and a screw hole 137b is formed in part of the outer surface of an extending portion 137a of a second eccentric shaft 135 to extend in the radial direction.

[0147] Referring to Fig. 26, a sensor holder 200 forms a ring, and has a hollow portion 200a in which a light-shielding body 208 (to be described later) is to be fitted. A pair of screw holes 200b and 200c are formed in the outer surface of the sensor holder 200 to extend to the hollow portion 200a so as to oppose each other in the radial direction.

[0148] As shown in Fig. 24, a support 201 which forms a ring integrally projects on one end of the sensor holder 200. The support 201 has a hollow portion 201a in which the extending portion 107a of an end shaft 107 of the first eccentric shaft 105 is to be fitted. A through hole 201b is formed in part of the outer surface of the support 201 to extend in the radial direction to the hollow portion 201a.

[0149] A light-projecting unit 202 has a threaded portion 202a in its outer surface. When threadably engaging a nut 203 on the threaded portion 202a with the threaded portion 202a being threadably engaged in the screw hole 200b of the sensor holder 200, the light-projecting unit 202 is fixed to the sensor holder 200.

[0150] Also, a light-receiving unit 204 has a threaded portion 204a in its outer surface. When threadably engaging a

nut 205 on the threaded portion 204a with the threaded portion 204a being threadably engaged in a screw hole 202c of the sensor holder 200, the light-receiving unit 204 is fixed to the sensor holder 200. The light-receiving unit 204 fixed to the sensor holder 200 in this manner receives light 206 projected from the light-projecting unit 202 and passing through the hollow portion 200a. The light-projecting unit 202 and light-receiving unit 204 constitute a photoelectric sensor.

[0151] With the extending portion 107a of the first eccentric shaft 105 being fitted in the hollow portion 201a of the sensor holder 200, the sensor holder 200 is attached to the extending portion 107a of the first eccentric shaft 105 by a bolt 207 inserted in the through hole 201b and threadably engaged in the screw hole 107b.

[0152] Referring to Fig. 24, the light-shielding body 208 is a cylindrical light reception amount changing means. As shown in Fig. 26, the light-shielding body 208 has a through hole 208a extending in the radial direction between those portions of the outer surface of the light-shielding body 208 which are phase-shifted from each other by 180°. More specifically, the through hole 208a is formed on a line including the diameter of the circular section of the light-shielding body 208.

[0153] As shown in Fig. 24, a ring-like support 209 integrally projects on one end face of the light-shielding body 208. The support 209 has a hollow portion 209a in which the extending portion 137a of the end shaft 137 of the second eccentric shaft 135 is to be fitted. A through hole 209b is formed in part of the outer surface of the support 209 to extend in the radial direction to the hollow portion 209a.

[0154] The light-shielding body 208 fitted in the hollow portion 200a of the sensor holder 200 is attached to the extending portion 137a of the second eccentric shaft 135 by a bolt 210 inserted in the through hole 209b and threadably engaging with the screw hole 137b. Thus, the light-projecting unit 202 is disposed on one end of the light-shielding body 208, and the light-receiving unit 204 is disposed on the other end of the light-shielding body 208. The axial line of the through hole 208a of the light-shielding body 208 coincides with an optical axis G3 (see Fig. 26) of the light-projecting unit 202 and light-receiving unit 204 attached to the sensor holder 200.

[0155] Fig. 27 shows a change in reception amount of the light-receiving unit 204 which is caused by the relative positional shift between the sensor holder 200 and light-shielding body 208 in directions of arrows E and F. When the "relative angular difference" is 0° at which no relative positional shift exists between the optical axis of the light-projecting unit 202 and light-receiving unit 204 and the axis of the through hole 208a of the light-shielding body 208 in the directions of the arrows E and F, that is, when the optical axis G3 coincides with the axis of the through hole 208a, the light reception amount of the light-receiving unit 204 becomes maximum.

[0156] When a relative positional shift occurs between the optical axis G3 and the axis of the through hole 208a of the light-shielding body 208 in the directions of the arrows E and F, the outer surface of the light-shielding body 208 and the surface of the through hole 208a shield light from the light-projecting unit 202 to decrease the amount of light passing through the through hole 208a of the light-shielding body 208. Hence, the light reception amount of the light-receiving unit 204 decreases gradually.

[0157] When a sheet 2 with a folded corner or to which a foreign substance is attached passes the first detection roller 112 or second detection roller 142, the relative positional shift (relative angular difference) between the optical axis G3 and the axis of the through hole 208a of the light-shielding body 208 in the directions of the arrows E and F becomes $\pm\alpha°$ or more.

The light reception amount of the light-receiving unit 204 thus becomes equal to or less than a reference value. An abnormal state is hence detected.

[0158] The operation of detecting an abnormal sheet state in the second embodiment of the present invention having the above arrangement will be described. When the sheet 2 with a folded corner or to which a foreign substance is attached on the side of the first detection roller 112 rotatably supported by the first eccentric shaft 105 passes between the first and second detection rollers 112 and 142 and a feed roller 91, the sheet 2 raises the first detection roller 112 to be higher than the second detection roller 142.

[0159] Hence, the pivot amount of the first eccentric shaft 105 in the direction of the arrow F becomes lager than the pivot amount of the second eccentric shaft 135 in the direction of the arrow F. Consequently, the pivot amount of the sensor holder 200 which pivots integrally with the first eccentric shaft 105 in the direction of the arrow F when the first eccentric shaft 105 pivots becomes larger than the pivot amount of the light-shielding body 208 which pivots integrally with the second eccentric shaft 135 in the direction of the arrow F when the second eccentric shaft 135 pivots.

[0160] Hence, the relative positional shift (relative angular difference) between the optical axis G3 and the axis of the through hole 208a of the light-shielding body 208 in the directions of the arrows E and F becomes $\pm a°$ or more. Consequently, the light reception amount of the light-receiving unit 204 becomes equal to or less than a reference value. An abnormal state in which a folded corner of a sheet or a foreign substance attached to the sheet is present on the side of the first detection roller 112 is hence detected.

[0161] When a sheet 2 with a folded corner or to which a foreign substance is attached on the side of the second detection roller 142 rotatably supported by the second eccentric shaft 135 passes between the first and second detection rollers 112 and 142 and the feed roller 91, the sheet 2 raises the second detection roller 142 to be higher than the first detection roller 112.

[0162] Hence, opposite to the case in which the sheet 2 with a folded corner or to which a foreign substance is attached on the side of the first detection roller 112 passes, the relative positional shift (relative angular difference) between the optical axis G3 and the axis of the through hole 208a of the light-shielding body 208 in the directions of the arrows E and F becomes -α° or more. Consequently, the light reception amount of the light-receiving unit 204 becomes equal to or less than the reference value. An abnormal state in which a folded corner of a sheet or a foreign substance attached to the sheet is present on the side of the second detection roller 142 is hence detected.

[0163] In the second embodiment, as the sensor holder 200 covers the path of light projected by the light-projecting unit 202 and received by the light-receiving unit 204, external light entering to the optical path, which adversely affects the amount of light received by the light-receiving unit 204, is shielded. Thus, a sheet abnormal state can be detected reliably and accurately. In the second embodiment, the relative positional shift (relative angular difference) between the optical axis G3 and the axis of the through hole 208a of the light-shielding body 208 in the directions of the arrows E and F decreases the light reception amount of the light-receiving unit 204. Alternatively, the light-shielding body may be such that the light reception amount decreases to zero at the reference position, and increases in accordance with the relative positional shift. In this case, an abnormality is determined when a light reception amount is equal to or more than the reference value.

Third Embodiment

[0164] The third embodiment of the present invention will be described with reference to Figs. 28A to 28D.

[0165] Referring to Fig. 28A, a stay 220 horizontally extends between a pair of left and right frames 221. Three bearing holders 222, 223, and 224 are attached to the stay 220. The bearing holder 222 is arranged on the side of one frame 221, the bearing holder 224 is arranged on the side of the other frame 221, and the bearing holder 223 is arranged between the bearing holders 222 and 224.

[0166] As shown in Fig. 28B, a first sensor lever 227 is supported on the bearing holder 222 through a bearing 226 to be rotatable about a shaft portion 227a as the rotation center. Levers 230 and 231 are supported on the bearing holder 223 through bearings 228 and 229 to be rotatable about shaft portions 230a and 231a as rotation centers, respectively. A second sensor lever 233 is supported on the bearing holder 224 through a lever 232 to be rotatable about a shaft portion 233a as a rotation center.

[0167] End shafts 235a and 235b of a first shaft 235 are supported respectively by the first sensor lever 227 and lever 230 at positions spaced apart from the shaft portions 227a and 230a each by a gap δ1. The first shaft 235 rotatably supports a first detection roller 236 through bearings 237.

[0168] As shown in Fig. 28C, a compression coil spring 238 is elastically mounted between the first sensor lever 227 and stay 220. The spring force of the compression coil spring 238 biases the first detection roller 236 counterclockwise (direction of an arrow E) in Fig. 28C about the shaft portion 227a as the pivot center.

[0169] End shafts 240a and 240b of a second shaft 240 are supported respectively by the lever 231 and second sensor lever 233 at positions spaced apart from the shaft portions 231a and 233a each by a gap δ1. The second shaft 240 rotatably supports the second detection roller 241 through bearings 242.

[0170] As shown in Fig. 28D, a compression coil spring 243 is elastically mounted between the second sensor lever 233 ad stay 220. The spring force of the compression coil spring 243 biases a second detection roller 241 counterclockwise (in the direction of an arrow E) in Fig. 28D about the shaft portion 233a as the pivot center.

[0171] A feed roller 239 is arranged to oppose the first detection roller 236 and second detection roller 241. When a sheet passes between the feed roller 239 and the first and second detection rollers 236 and 241, the first detection roller 236 and second detection roller 241 pivot in the direction of an arrow F (direction of sheet thickness) against the spring forces of the compression coil springs 238 and 243. Hence, the first sensor lever 227 and second sensor lever 233 pivot in the direction of the arrow F about the shaft portion 227a as the pivot center.

[0172] The first sensor lever 227 is provided with a light-projecting unit 245 at the swing end, and the second sensor lever 233 is provided with a light-receiving unit 246 at the swing end. The light-projecting unit 245 and light-receiving unit 246 constitute a photoelectric sensor serving as a detection means.

[0173] When no sheet is present between the first and second detection rollers 236 and 241 and the feed roller 239, the axes of the first shaft 235 and second shaft 240 are located on one straight line in the directions of arrows C and D. In this state, the light-projecting unit 245 and light-receiving unit 246 oppose each other such that their axes coincide, so the light-receiving unit 246 receives light 247 projected from the light-projecting unit 245. When the pivot amounts of the first and second sensor levers 227 and 233 in the direction of the arrow F differ, the light-receiving unit 246 does not receive the light 247 projected by the light-projecting unit 245. Hence, a sheet abnormal state caused by a folded corner of a sheet or a foreign substance attached to the sheet surface is detected, as will be described later.

[0174] The operation of detecting a sheet abnormal state in the third embodiment of the present invention having the above arrangement will be described. First, a case of detecting a sheet with a folded corner or to which a foreign substance is attached on the side of the first detection roller 236 will be described. In this case, when the sheet passes

between the first and second detection rollers 235 and 241 and the feed roller 239, the sheet raises the first detection roller 236 to be higher than the second detection roller 241.

[0175] Accordingly, the pivot amount of the first sensor lever 227 in the direction of the arrow F becomes larger than the pivot amount of the second sensor lever 233 in the direction of the arrow F, to shift the positions of the light-projecting unit 245 and light-receiving unit 246 relative to each other. Therefore, the light-receiving unit 246 does not receive the light 247 projected by the light-projecting unit 245, thus detecting an abnormal state in which a corner of a sheet is folded or a foreign substance is attached to the sheet on the side of the first detection roller 236.

[0176] When the sheet with a folded corner or a sheet to which a foreign substance is attached on the side of the second detection roller 241 passes between the first and second detection rollers 235 and 241 and the feed roller 239, the sheet raises the second detection roller 241 to be higher than first detection roller 236.

[0177] Accordingly, the pivot amount of the second sensor lever 233 in the direction of the arrow F becomes larger than the pivot amount of the first sensor lever 227 in the direction of the arrow F, to shift the positions of the light-projecting unit 245 and light-receiving unit 246 relative to each other. Therefore, the light-receiving unit 246 does not receive the light 247 projected by the light-projecting unit 245, thus detecting an abnormal state in which a corner of a sheet is folded or a foreign substance is attached to the sheet on the side of the second detection roller 241.

[0178] A modification of the third embodiment of the present invention will be described with reference to Figs. 29A to 29D.

[0179] This modification is different from the third embodiment described in that the lever 230 is the first sensor lever that supports the light-projecting unit 245 and that the lever 231 is the second sensor lever that supports the light-receiving unit 246.

[0180] In this arrangement, when a sheet with a folded corner or to which a foreign substance on the side of the first detection roller 236 passes between the first and second detection rollers 235 and 241 and the feed roller 239, the sheet raises the first detection roller 236 to be higher than the second detection roller 241.

[0181] Accordingly, the pivot amount of the first sensor lever 230 in the direction of the arrow F becomes larger than the pivot amount of the second sensor lever 231 in the direction of the arrow F, to shift the positions of the light-projecting unit 245 and light-receiving unit 246 relative to each other. Therefore, the light-receiving unit 246 does not receive the light 247 projected by the light-projecting unit 245, thus detecting an abnormal state in which a corner of a sheet is folded or a foreign substance is attached to the sheet on the side of the first detection roller 236.

[0182] When a sheet with a folded corner or to which a foreign substance on the side of the second detection roller 241 passes between the first and second detection rollers 235 and 241 and the feed roller 239, the sheet raises the second detection roller 241 to be higher than the first detection roller 236.

[0183] Accordingly, the pivot amount of the second sensor lever 231 in the direction of the arrow F becomes larger than the pivot amount of the first sensor lever 230 in the direction of the arrow F, to shift the positions of the light-projecting unit 245 and light-receiving unit 246 relative to each other. Therefore, the light-receiving unit 246 does not receive the light 247 projected by the light-projecting unit 245, thus detecting an abnormal state in which a corner of a sheet is folded or a foreign substance is attached to the sheet on the side of the second detection roller 241.

[0184] In the third embodiment and its modification, an abnormal state is not limited to a case in which the light-receiving unit 246 does not completely receive the light 247 projected by the light-projecting unit 245. An abnormal state may be determined when the light reception amount of the light-receiving unit 246 becomes equal to or less than a predetermined value.

[0185] In the third embodiment and its modification, the photoelectric sensor comprises the light-projecting unit 245 and light-receiving unit 246. Alternatively, a reflection type photoelectric sensor may be employed in which a light-projecting unit and light-receiving unit are provided to the side of the light-projecting unit 245, i.e., the first sensor levers 227 and 230, and reflection plates are provided to the side of the light-receiving unit 246, i.e., the second sensor levers 233 and 231.

Fourth Embodiment

[0186] The fourth embodiment of the present invention will be described with reference to Figs. 30, 31A, and 31B.

[0187] A sheet abnormality detection apparatus 250 according to the fourth embodiment comprises a first detecting portion 251 serving as the first abutting portion comprising first to fourth detection rollers 251A to 251D. The first to fourth detection rollers 251A to 251D are disposed, basically, separately side by side in the lateral direction (directions of arrows C and D) of a sheet 2 (2A to 2C) to be conveyed and are supported to be movable in the direction of thickness of the sheet 2. The detection rollers 251A to 251D may be shifted a little from each other in the convey direction of the sheet 2.

[0188] The sheet abnormality detection apparatus 250 further comprises a second detecting portion 252 serving as the second abutting portion comprising fifth to ninth detection rollers 252A to 252E. The fifth to ninth detection rollers 252A to 252E are also disposed to be shifted from each other in the lateral direction (directions of the arrows C and D) of the sheet 2 (2A to 2C) to be conveyed and are supported to be movable in the direction of thickness of the sheet 2.

Note that the second detecting portion 252 is disposed to be shifted from the first detecting portion 251 in the convey direction (direction of an arrow A) of the sheet 2.

[0189] The first detecting portion 251 is provided with a first detection unit (first detection means) 253 which detects a relative positional shift between one of the first to fourth detection rollers 251A to 251D and at least one remaining detection roller in the direction of height (direction of sheet thickness, i.e., a direction perpendicular to the sheet surface). The first detection unit 253 comprises first to third sensors 253A to 253C respectively provided between the adjacent ones of the first to fourth detection rollers 251A to 251D.

[0190] The second detecting portion 252 is provided with a second detection unit (second detection means) 254 which detects a relative positional shift between one of the fifth to ninth detection rollers 252A to 252E and at least one remaining detection roller in the direction of height (direction of sheet thickness, i.e., a direction perpendicular to the sheet surface). The second detection unit 254 comprises fourth to seventh sensors 254A to 254D respectively provided between the adjacent ones of the fifth to ninth detection rollers 252A to 252E.

[0191] The inner three, sixth to eighth detection rollers 252B to 252D of the second detecting portion 252 are disposed to each detect an abnormal state of a sheet within a range that covers the portion between the corresponding adjacent ones of the first to fourth detection rollers 251A to 251D of the first detecting portion 251. More specifically, the sixth to eighth detection rollers 252B to 252D of the second detecting portion 252 exist in the ranges that cover the portions between the corresponding adjacent ones of the first to fourth detection rollers 251A to 25D of the first detecting portion 251. In other words, the sixth to eighth detection rollers 252B to 252D of the second detecting portion 252 extend in the direction (directions of the arrows C and D) perpendicular to the sheet convey direction to exceed the ranges between the corresponding adjacent ones of the first to fourth detection rollers 251A to 251D of the first detecting portion 251.

[0192] The two, fifth and ninth detection rollers 252A and 252E at the two ends of the second detecting portion 252 are disposed to detect an abnormal state of a sheet outside the first and fourth detection rollers 251A and 251D of the first detecting portion 251 in the lateral direction. More specifically, the fifth and ninth detection rollers 252A and 252E of the second detecting portion 252 exist in ranges that correspond to the left and right ends of the sheet of the first detection roller 251A and the left and right ends of the sheet of the fourth detection roller 251D, respectively, of the first detecting portion 251.

[0193] The detection rollers 252B to 252D of the second detecting portion 252 exist in the gaps among the adjacent detection rollers 251A to 251D of the first detecting portion 251 in the direction of the arrow A, and the detection rollers 251A to 251D of the first detecting portion 251 exist in the gaps among the adjacent detection rollers 252A to 252E of the second detecting portion 252 in the direction of an arrow B. Hence, when seen from the sheet convey direction, the gaps among the adjacent detection rollers.251A to 251D of the first detecting portion 251 do not overlap the gaps among the adjacent detection rollers 252A to 252E of the second detecting portion 252.

[0194] A distance W1 between the end of the first detection roller 251A in the direction of the arrow C and the end of the fourth detection roller 251D in the direction of the arrow D is set smaller than the width of the minimum-size sheet 2A in the lateral direction (the directions of the arrows C and D). A distance W2 between the end of the sixth detection roller 252B in the direction of the arrow D and the end of the eighth detection roller 252D in the direction of the arrow C is set larger than the width of the minimum-size sheet 2A in the lateral direction (the directions of the arrows C and D). Hence, the second, fifth, and sixth sensors 253B, 254B, and 254C detect the abnormal state of the minimum-size sheet 2A.

[0195] The distance W2 between the end of the sixth detection roller 252B in the direction of the arrow D and the end of the eighth detection roller 252D in the direction of the arrow C is set smaller than the width of the medium-size sheet 2B in the lateral direction (the directions of the arrows C and D). A distance W3 between the end of the first detection roller 251A in the direction of the arrow D and the end of the fourth detection roller 251D in the direction of the arrow C is set larger than the width of the medium-size sheet 2B in the lateral direction (the directions of the arrows C and D). Hence, the first to third sensors 253A to 253C and the fifth and sixth sensors 254B and 254C detect the abnormal state of the medium-sized sheet 2B.

[0196] A distance W4 between the end of the fifth detection roller 252A in the direction of the arrow D and the end of the ninth detection roller 252E in the direction of the arrow C is set larger than the width of the maximum-size sheet 2C in the lateral direction (the directions of the arrows C and D). Hence, the first to third sensors 253A to 254C and the fourth to seventh sensors 254A to 254D detect the abnormal state of the maximum-size sheet 2C.

[0197] The fifth and ninth detection rollers 252A and 252E of the second detecting portion 252 are disposed to detect the abnormal state of the sheet 2 outside the first and fourth detection rollers 251A and 251D located at the two ends of the first detecting portion 251 in the lateral direction (directions of the arrows C and D) of the sheet 2.

[0198] The first to third detection rollers 251A to 251C and fifth to eighth detection rollers 252A to 252D have each the same structure as that of the first detection roller 112 described in the above first embodiment. The forth and ninth detection rollers 251D and 252E have each the same structure as that of the second detection roller 142 described in the above first embodiment, and comprise double feed detection units (double feed detection means) 158A and 158B, respectively.

[0199] Each of the first to third sensors 253A to 253C and fourth to seventh sensors 254A to 254D has the same

structure as that of the abnormality detection unit 177 described in the above first embodiment, and comprises first and second sensor-attached ball plungers 174 and 130.

[0200] The operation of detecting an abnormal sheet state in the fourth embodiment of the present invention having the above arrangement will be described. First, a case of an abnormal state will be described in which a minimum-size sheet 2A includes a folded corner or has a foreign substance attached to it on the side of the sixth detection roller 252B.

[0201] In this case, when the sheet 2A passes the sixth detection roller 252B, a relative positional shift occurs between the sixth detection roller 252B and the adjacent seventh detection roller 252C in the direction of height (the direction of sheet thickness, i.e., a direction perpendicular to the sheet surface). Hence, the fifth sensor 254B arranged between the two rollers 252B and 252C detects an abnormal state in which a corner of the minimum-size sheet 2A is folded or a foreign substance is attached to the sheet 2A.

[0202] Assume that the corner of the sheet is folded or the foreign substance is attached to the sheet at a position not detected by any of the second and third detection rollers 251B and 251C of the first detecting portion 251, that is, at a position corresponding to the portion between the second and third detection rollers 251B and 251C or outside the second or third detection roller 251B or 251C. Yet, as the folded corner or the foreign substance passes one of the fifth to eighth detection rollers 252B to 252D of the second detecting portion 252, the fifth or sixth sensors 254B and 254C can detect it.

[0203] Similarly, assume that the corner of the sheet is folded or the foreign substance is attached to the sheet at a position not detected by any of the sixth to eighth detection rollers 252B to 252D of the second detecting portion 252, that is, at a position corresponding to a portion between any adjacent ones of the sixth to eighth detection rollers 252B to 252D. Yet, as the folded corner or the foreign substance passes the second and third detection rollers 251B and 251C of the first detecting portion 251, the second sensor 253B can detect it. In this manner, a range where an abnormality cannot be detected does not exist in the lateral direction (directions of the arrows C and D) of the sheet, allowing reliable abnormal state detection.

[0204] If a corner of the minimum-size sheet 2A is not folded or no foreign substance is attached to the minimum-size sheet 2A but double feed occurs, the double feed detection unit 158A detects the double feed as the minimum-size sheet 2A passes part of the fourth detection roller 251D.

[0205] An abnormal state will be described in which a corner of a medium-size sheet 2B is folded or a foreign substance is attached to the medium-size sheet 2B on the side of the first detection roller 251A. In this case, when the sheet 2B passes the first detection roller 251A, a relative positional shift occurs between the first detection roller 251A and the adjacent second detection roller 251B in the direction of height (a sheet thickness height, i.e., a direction perpendicular to the sheet surface). Hence, the first sensor 253A arranged between the two rollers 251A and 251B detects the abnormal state in which a corner of the medium-size sheet 2A is folded or a foreign substance is attached to the sheet 2B.

[0206] Assume that the corner of the sheet is folded or the foreign substance is attached to the sheet at a position not detected by any of the first to fourth detection rollers 251A to 251D of the first detecting portion 251, that is, at a position corresponding to a portion between adjacent ones of the first to fourth detection rollers 251A to 251D or outside one of the first to fourth detection rollers 251A to 251D. Yet, as the folded corner or the foreign substance passes one of the fifth to ninth detection rollers 252A to 252E of the second detecting portion 252, one of the fourth to seventh sensors 254A to 254D can detect it.

[0207] Similarly, assume that the corner of the sheet is folded or the foreign substance is attached to the sheet at a position not detected by any of the fifth to ninth detection rollers 252A to 252E of the second detecting portion 252, that is, at a position corresponding to a portion between adjacent ones of the fifth to ninth detection rollers 252A to 252E. Yet, as the folded corner or the foreign substance passes one of the first to fourth detection rollers 251A to 251D of the first detecting portion 251, one of the first to third sensors 253A to 253C can detect it.

[0208] If a corner of the medium-size sheet 2B is not folded or no foreign substance is attached to the medium-size sheet 2B but double feed occurs, the double feed detection unit 158A detects the double feed as the medium-size sheet 2B passes the fourth detection roller 251D.

[0209] An abnormal state will be described in which a corner of a maximum-size sheet 2C is folded or a foreign substance is attached to the maximum-size sheet 2C on the side of the fifth detection roller 252A. In this case, when the sheet 2C passes the fifth detection roller 252A, a relative positional shift occurs between the fifth detection roller 252A and the adjacent sixth detection roller 252B in the direction of height (a sheet thickness height, i.e., a direction perpendicular to the sheet surface). Hence, the fourth sensor 254A arranged between the two rollers 252A and 252B detects the abnormal state in which a corner of the maximum-size sheet 2C is folded or a foreign substance is attached to the sheet 2C.

[0210] Assume that the corner of the sheet is folded or the foreign substance is attached to the sheet at a position not detected by any of the first to fourth detection rollers 251A to 251D of the first detecting portion 251, that is, at a position corresponding to a portion between adjacent ones of the first to fourth detection rollers 251A to 251D or outside one of the first to fourth detection rollers 251A to 251D. Yet, as the folded corner or the foreign substance passes one of the fifth to ninth detection rollers 252A to 252E of the second detecting portion 252, one of the fourth to seventh sensors

254A to 254D can detect it.

[0211] Similarly, assume that the corner of the sheet is folded or the foreign substance is attached to the sheet at a position not detected by any of the fifth to ninth detection rollers 252A to 252E of the second detecting portion 252, that is, at a position corresponding to a portion between adjacent ones of the fifth to ninth detection rollers 252A to 252E. Yet, as the folded corner or the foreign substance passes one of the first to fourth detection rollers 251A to 251D of the first detecting portion 251, one of the first to third sensors 253A to 253C can detect it.

[0212] Since the fifth and ninth detection rollers 252A and 252E are provided to correspond to the outer ends of the maximum-size sheet 2C in the lateral direction, an abnormal state can be detected on the entire surface of the sheet. If a corner of the maximum-size sheet 2C is not folded or no foreign substance is attached to the maximum-size sheet 2C but double feed occurs, the double feed detection unit 158B detects the double feed as the maximum-size sheet 2C passes the ninth detection roller 252E.

[0213] In this manner, because of the first to fourth detection rollers 251A to 251D and fifth to ninth detection rollers 252A to 252E, no undetectable range exists in the lateral direction of the sheet 2, so the entire surface of the sheet 2 can be detected. This allows more reliable detection of an abnormal state occurring in part of a sheet such as a folded corner of a sheet or a foreign substance attached to a sheet surface.

[0214] A modification of the fourth embodiment of the present invention will be described with reference to Fig. 32.

[0215] This modification is different from the fourth embodiment described above in that sensor levers 230 and 231 and levers 227 and 233 rotatably support the first to fourth detection rollers 251A to 251D and fifth to ninth detection rollers 252A and 252E in the same manner as in the structure described with reference to Fig. 29, and that each of the first to third sensors 253A to 253C and fourth to seventh sensors 254A to 254D comprises a light-projecting unit 245 and light-receiving unit 246 provided to the sensor levers 230 and 231, respectively.

[0216] In this modification as well, the operation of detecting an abnormal state such as a folded corner or an attached foreign substance in sheets 2A to 2C with sizes ranging from minimum to maximum sizes is the same as in the fourth embodiment described above. The first to fourth detection rollers 251A to 251D and fifth to ninth detection rollers 252A to 252E can detect the entire sheet surface regardless of the sheet size. Thus, the operation and effect of reliably detecting an abnormal state such as a folded corner or attached foreign substance can also be obtained.

[0217] In the fourth embodiment, an abnormality detection unit 177 comprises the first and second sensor-attached ball plungers 174 and 130. The abnormality detection unit 177 may comprise a photoelectric sensor and light-shielding body, in the same manner as in the second embodiment described with reference to Figs. 23 to 27.

[0218] In the fourth embodiment, the plurality of rows of detection rollers are arranged to be shifted from each other in the sheet convey direction, so that an undetectable range occurring among rollers of one row is covered by the detection rollers of the other row. The fourth embodiment suffices as far as it has this feature. This feature can be applied not only to detection of an abnormal state in which sheets are conveyed to overlap while being shifted from each other in the convey direction, as in the first to third embodiments described above, but also to detection of a case in which sheets are conveyed separately from each other.

Fifth Embodiment

[0219] The fifth embodiment of the present invention will be described with reference to Fig. 33.

[0220] According to the fifth embodiment, sensors that are to be used are selected among the first to third sensors 253A to 253C and fourth to seventh sensors 254A to 254D of the fourth embodiment described above in accordance with the sheet size.

[0221] Referring to Fig. 33, a controller 260 of a sheet-fed rotary printing press 1 is electrically connected to a sheet size input unit 259, potentiometers 28, 39, 42A, 42B, 57A, and 78A, first to third sensors 253A to 253C and fourth to seventh sensors 254A to 254D, overlap feed detection units 158A and 158B, a suction box motor 19, a side separator motor 34, side lay motors 43A and 43B, a suction wheel motor 57, a side jogger motor 78, and a main motor 258.

[0222] The size of a sheet 2 to be conveyed is input to the sheet size input unit 259. The controller 260 selects the sensor to be used among the first to third sensors 253A to 253C and fourth to seventh sensors 254A to 254D and two overlap feed detection units 158A and 158B on the basis of information on the sheet size input to the sheet size input unit 259. The controller 260 also controls the suction box motor 19, side separator motor 34, side lay motors 43A and 43B, suction wheel motor 57, and side jogger motor 78 which serve as handling members which handles the sheet 2, on the basis of the information on the sheet size input to the sheet size input unit 259 and the detection values of the respective potentiometers 28, 39, 42A, 42B, 57A, and 78A. The controller 260 also stops the sheet-fed rotary printing press 1 driven by the main motor 258 on the basis of information on an abnormal state detected by the first to third sensors 253A to 253C and fourth to seventh sensors 254A to 254D.

[0223] The operation of detecting an abnormal state in the fifth embodiment of the present invention having the above arrangement will be described with reference to Figs. 2 to 11, 30, and 33. First, a case of feeding a minimum-size sheet 2A from a feeder 4 onto a feeder board 3 will be described.

[0224] The operator inputs the size of the minimum-size sheet 2A to the sheet size input unit 259.

[0225] The controller 260 selects the sensors to be used among the first to third sensors 253A to 253C and fourth to seventh sensors 254A to 254D on the basis of the information on the sheet size input to the sheet size input unit 259. Detection rollers that detect the minimum-size sheet 2A comprise second and third detection rollers 251B and 251C and sixth to eighth detection rollers 252B to 252D, as described in the fourth embodiment. Accordingly, the controller 260 selects the second sensor 253B and fifth and sixth sensors 254B and 254C. The controller 260 also selects the overlap feed detection unit 158A as the overlap feed detection sensor and does not use the overlap feed detection unit 158B.

[0226] Even when the minimum-size sheet 2A is conveyed in a normal state, a relative positional shift occurs between a detection roller (e.g., a fifth detection roller 252A) that the minimum-size sheet 2A does not pass and an adjacent detection roller (a sixth detection roller 252B). The fourth sensor 254A may undesirably detect this positional shift. Since the necessary sensors to be used are selected in accordance with the sheet size, the controller 260 is set in advance not to determine an "abnormality" on the basis of signals from the sensors 253A, 253C, 254A, and 254D that are not to be used. This can eliminate erroneous detection of detecting a normal state as an abnormal state.

[0227] In this manner, since the controller 260 is set in advance not to use non-selected sensors including the fourth sensor 254A, erroneous detection can be prevented. Therefore, an abnormal state occurring in part of the sheet, e.g., a folded corner of the sheet or a foreign substance attached to the surface of the sheet 2, can be detected reliably regardless of the size of the sheet 2 without erroneous detection. Also, the detecting function of the unselected sensors may be stopped.

[0228] The controller 260 performs control operation of adjusting the positions of a suction box 12, side separator 11, side lay devices 5A and 5B, suction wheels 7, and side jogger 8 serving as handling members which handle the sheet.

[0229] When the controller 260 drives the suction box motor 19 in one direction, a suction device 10 moves in the direction of the arrow A, as shown in Fig. 2. The controller 260 adjusts the suction device 10 to match the minimum-size sheet 2A on the basis of the information from the potentiometer 28 which detects the driving amount of the suction box motor 19.

[0230] When the controller 260 drives the side separator motor 34 in one direction, the side separator 11 moves in the direction of the arrow D, as shown in Fig. 4. The controller 260 adjusts the side separator 11 to match the minimum-size sheet 2A on the basis of the information from the potentiometer 39 which detects the driving amount of the side separator motor 34.

[0231] When the controller 260 drives the side lay motors 43A and 43B in one direction and the opposite direction opposite to it in synchronism with each other, the side lay device 5A moves in the direction of the arrow C and the side lay device 5B moves in the direction of the arrow D, as shown in Fig. 6. The controller 260 adjusts the side lay devices 5A to 5B to match the minimum-size sheet 2A on the basis of information from the potentiometers 42A and 42B which detect the driving amounts of the side lay motors 43A and 43B.

[0232] When the controller 260 drives the suction wheel motor 57 in one direction, the suction wheels 7 move in the direction of the arrow A, as shown in Fig. 9. The controller 260 adjusts the suction wheels 7 to match the minimum-size sheet 2A on the basis of information from the incorporated potentiometer 57A which detects the driving amount of the suction wheel motor 57.

[0233] When the controller 260 drives the side jogger motor 78 in one direction, the side jogger 8 moves in the direction of the arrow D, as shown in Fig. 11. The controller 260 adjusts the side jogger 8 to match the minimum-size sheet 2A on the basis of information from the incorporated potentiometer 78A which detects the driving amount of the side jogger motor 78.

[0234] A case of feeding a medium-size sheet 2B from the feeder 4 onto the feeder board 3 will be described. The operator inputs the size of the medium-size sheet 2B to the sheet size input unit 259.

[0235] The controller 260 selects the sensors to be used among the first to third sensors 253A to 253C and fourth to seventh sensors 254A to 254D on the basis of the information on the sheet size input to the sheet size input unit 259. Detection rollers that detect the medium-size sheet 2B comprise first to fourth detection rollers 251A to 251D and sixth to eighth detection rollers 252B to 252D, as described above. Accordingly, the controller 260 selects the first to third sensors 253A to 253C and fifth and sixth sensors 254B and 254C, and is set not to make an erroneous determination on the basis of signals from the non-selected sensors 254A and 254D. Simultaneously, the controller 260 performs control operation of adjusting the positions of the suction box 12, side separator 11, side lay devices 5A and 5B, suction wheels 7, and side jogger 8 serving as the handling members which handle the sheet to match the medium-size sheet 2B. The controller 260 also selects the overlap feed detection unit 158A as the overlap feed detection sensor and does not use the overlap feed detection unit 158B.

[0236] A case of feeding a maximum-size sheet 2C from the feeder 4 onto the feeder board 3 will be described. The operator inputs the size of the maximum-size sheet 2C to the sheet size input unit 259.

[0237] The controller 260 selects the sensors to be used among the first to third sensors 253A to 253C and fourth to seventh sensors 254A to 254D on the basis of the information on the sheet size input to the sheet size input unit 259.

Detection rollers that detect the maximum-size sheet 2C comprise the first to fourth detection rollers 251A to 251D and sixth to ninth detection rollers 252B to 252E, as described above. Accordingly, the controller 260 selects the first to third sensors 253A to 253C and fourth to seventh sensors 254A to 254D. At the same time, the controller 260 performs control operation of adjusting the positions of the suction box 12, side separator 11, side lay devices 5A and 5B, suction wheels 7, and side jogger 8 serving as the handling members which handle the sheet to match the maximum-size sheet 2C. The controller 260 also selects the overlap feed detection unit 158B as the overlap feed detection sensor and does not use the overlap feed detection unit 158A.

[0238] By selecting the sensors to be used among the first to third sensors 253A to 253C and fourth to seventh sensors 254A to 254D in this manner in accordance with the sheet size, an abnormal state occurring in part of the sheet, e.g., a folded corner of the sheet or a foreign substance attached to the surface of the sheet 2, can be detected reliably regardless of the sheet size. When the sheet size is input to the sheet size input unit 259, the sensors to detect the abnormal sheet state are selected automatically in accordance with the sheet size. This reduces the load to the operator. In addition, as the positions of the handling members which handle the sheet are adjusted automatically in accordance with the sheet size, the positions of the handling members need not be separately adjusted. This improves the productivity. As the positions of the handling members are adjusted reliably, a sheet conveyance error can be prevented.

[0239] According to the fifth embodiment, the first detecting portion 251 and the second detecting portion 252 which is shifted in the convey direction of the sheet 2 are provided. Either one detecting portion may be provided, and among the plurality of sensors provided to this detecting portion, a sensor to be used to detect a sheet abnormality may be selected. In fine, this embodiment can be employed when a plurality of sets each comprising two detection rollers and a sensor which detects a relative positional shift between the two detection rollers in the direction of height (the direction of sheet thickness, i.e., a direction perpendicular to the sheet surface) are disposed side by side in the lateral direction of the sheet under conveyance.

Sixth Embodiment

[0240] The sixth embodiment of the present invention will be described with reference to Figs. 34A to 44U.

[0241] Referring to Figs. 34A and 34B, support blocks 301A and 301B vertically stand on the respective ends of the feeder board 3 in the directions of arrows C and D. A prismatic stay 302 horizontally extends between the support blocks 301A and 301B. Bolts 303 fix the two ends of the stay 302 to the support blocks 301A and 301B.

[0242] Seven sheet abnormality detection units (sheet abnormality detection means) 305-1 to 305-7 are arranged between the stay 302 equidistantly in the directions of the arrows C and D. The sheet abnormality detection units 305-1 to 305-7 are provided upstream of the feeder board 3 in the sheet convey direction. As the sheet abnormality detection units 305-1 to 305-7 have the same structure, only the sheet abnormality detection unit 305-1 will be described with reference to Figs. 35 to 37.

[0243] Referring to Fig. 35, the stay 302 supports a support member 306. An upwardly open fitting portion 306a which has a U-shaped section and is to fit in the stay 302 is formed on the support member 306. The lower portion of the support member 306 is provided with a pair of opposing legs 306b which form a Y shape, as shown in Fig. 36.

[0244] The support member 306 is supported by the stay 302 as the fitting portion 306a is fitted in the stay 302 and a lid member 307 which covers the opening of the fitting portion 306a is attached to the fitting portion 306a with bolts 308. Referring to Fig. 35, a set screw 309 threadably engaging with the lid member 307 attaches the fitting portion 306a to the stay 302 to be in tight contact with it.

[0245] A shaft 312 horizontally extends between the pair of legs 306b of the support member 306. A roller support lever 311 with an L shape when seen from the side is supported at its center to be rotatable about the shaft 312 as the rotation center.

[0246] One end of the roller support lever 311 is provided with a pair of opposing arms 311a which form a Y shape. As shown in Fig. 36, a shaft 315 horizontally extending between the pair of arms 311a rotatably supports a detection roller 313-1, serving as an abutting member, through a bearing 314. The weight of the detection roller 313-1 biases the roller support lever 311 clockwise in Fig. 35 about the shaft 312 as the pivot center. The detection roller 313-1 is in contact with a feed roller 91.

[0247] The other end of the roller support lever 311 is provided with a detection target portion 311b made of a magnetic metal, e.g., iron. The detection target portion 311b comprises a displacement sensor which generates a magnetic field and is used to measure the displacement of the magnetic metal to detect a change in a magnetic flux caused by the magnetic metal, and opposes a position detection sensor 321-1 serving as an abutting member position detection means which detects the position of the detection roller 313-1. A sensor holder 316 holds the position detection sensor 321-1. Bolts 317 attach the sensor holder 316 to the fitting portion 306a of the support member 306.

[0248] In this arrangement, when a sheet 2 passes between the feed roller 91 and detection roller 313-1, the roller support lever 311 pivots counterclockwise in Fig. 35 about the shaft 312 as the pivot center, i.e., vertically upward with respect to the sheet surface. Consequently, the detection target portion 311b is spaced apart from the position detection

sensor 321-1, so the output from the position detection sensor 321-1 changes. The sheet abnormality detection units 305-1 to 305-7 respectively comprise the detection roller 313-1 and detection rollers 313-2 to 313-7 and the position detection sensor 321-1 and position detection sensors 321-2 to 321-7.

[0249] Referring to Fig. 38, a feedboard 329 is connected to a feeder board 3. The distal end of the feedboard 329 is provided with a front lay 330 which jogs the leading edge of the sheet 2. A front lay stopping air cylinder 350J (to be described later) stops the front lay 330 at a stopping position indicated by a solid line in Fig. 38, to act on the sheet 2. A swing arm shaft 331 swings between alternate long and short dashed lines 332A and 332B. A swing gripper (not shown) which grips the sheet 2 and conveys it to an impression cylinder 83 is axially mounted on the swing arm shaft 331. A swing grip operation stopping air cylinder 350L (to be described later) maintains the swing gripper in a released state.

[0250] Referring to Fig. 39, a printing press controller 350 comprises a CPU 350A, a RAM 350B, a ROM 350C, a printing start switch SW1, an input device 350D, a display 350E, an output device (a flexible disk drive, a printer, or the like) 350F, a storage 350G, a feed device 350H, a feed device driving clutch 350I, the front lay stopping air cylinder 350J, a front lay stopping air cylinder valve 350K, the swing grip operation stopping air cylinder 350L, a swing grip operation stopping air cylinder valve 350M, first to fourth printing units 350N-1 to 350N-4, a drive motor driver 3500, a drive motor 350P, a drive motor rotary encoder 350Q, a printing press reference phase detector 350R, a printing speed setting unit 350Y, and interfaces (I/O) 350S to 350Z and 350W. The printing press reference phase detector 350R is a detector such as a proximity switch which is turned on to generate one pulse when the printing press reaches a reference rotary phase. More specifically, the printing press reference phase detector 350R generates one pulse each time the printing press rotates by one turn, in other words, each time the suction device 10 feeds one sheet. The printing press controller 350 is connected to a sheet abnormality detection apparatus 370 through an interface (I/F) 350X.

[0251] Referring to Fig. 40, the sheet abnormality detection apparatus 370 comprises a CPU 370A serving as an arithmetic means, a RAM 370B, a ROM 370C, a preset switch SW2, a reset switch SW3, an input apparatus 370D, a display 370E, an output device (a flexible disk drive, a printer, or the like) 370F, a sheet width setting unit 370G, a sheet length setting unit 370H, sheet abnormality detection units 305-n, a storage 370N, a drive motor rotary encoder 370S, and interfaces (I/O) 370P, 370Q, and 370T. Each sheet abnormality detection unit 305-n includes a position detection sensor 321-n for a detection roller 313-n, an OP amplifier 370J, an analog/digital converter (A/D) 370K, a gain value digital/analog converter 370L, an offset value digital/analog converter 370M, and an interface (I/O) 3700. The sheet abnormality detection apparatus 370 is connected to the printing press controller 350 through an interface (I/O) 370R. Note that "n" in the sheet abnormality detection unit 305-n, detection roller 313-n, and position detection sensor 321-n represents number 1, 2, 3, 4, 5, 6, or 7. In the following description, the detection roller 313-N with a number N may be particularly represented as "the detection roller N".

[0252] Fig. 41 shows the memory contents of the storage 350G of the printing press controller 350. The storage 350G comprises memories M1 to M7. The memory M1 stores a maximum overlapping sheet count OSN. The memory M2 stores the number of sheets fed up to the sheet abnormality detection unit 305-n. The memory M3 stores a feed sheet count for the preset. The memory M4 stores a count K. The memory M5 stores a slower motion speed. The memory M6 stores a printing speed. The memory M7 stores the number of sheets fed from the sheet abnormality detection unit-n 305 up to the front lay.

[0253] Figs. 42A and 42B show the memory contents of the storage 370N of the sheet abnormality detection apparatus 370. The storage 370N comprises memories M10 to M40. The memory M10 stores a sheet width. The memory M11 stores a sheet length. The memory M12 stores a conversion table of a sheet width to the number of a usable detection roller. The memory M13 stores a minimum number N of the usable detection roller. The memory M14 stores a maximum number Nmax of the usable detection roller. The memory M15 stores conversion table of a sheet length to the maximum overlapping sheet count.

[0254] The memory M16 stores the maximum overlapping sheet count OSN. The memory M17 stores a count N. The memory M18 stores a reference output value for the offset value D/A converter of the OP amplifier connected to the position detection sensor 321-n of the detection roller N. The memory M19 stores a reference output value for the gain value D/A converter of the OP amplifier connected to the position detection sensor 321-n of the detection roller N.

[0255] The memory M20 stores a count M. The memory M21 stores an output SOnm from the A/D converter connected to the position detection sensor 321-n of the detection roller N. The memory M22 stores a sensor output storing pulse count PPN for the preset. The memory M23 stores a minimum output value SOnmin of the position detection sensor 321-1 of each detection roller N. The memory M24 stores a maximum value SOnmax of the position detection sensor 321-n of each detection roller N.

[0256] The memory M25 stores a count L. The memory 26 stores a difference (SOnm - SOnm-1) between Mth and (M-1)th values of an A/D converter connected to the position detection sensor 321-n of the detection roller N. The memory M27 stores an overlapping portion judging threshold OD. The memory M28 stores an overlapping portion output. The memory M29 stores an output value for the offset value D/A converter of the OP amplifier connected to the position detection sensor 321-n of the detection roller N.

[0257] The memory M30 stores a difference (SOnmax - SOnmin) between the maximum value SOnmax and minimum value SOnmin of the A/D converter connected to the position detection sensor 321-n of the detection roller N. The memory M31 stores the gain value of the OP amplifier connected to the position detection sensor 321-n of the detection roller N. The memory M32 stores an output value for the gain value D/A converter of the OP amplifier connected to the position detection sensor 321-n of the detection roller N.

[0258] The memory M33 stores the difference between the (maximum overlapping sheet count OSN)th value and (maximum overlapping sheet count OSN - 1)th value as the overlapping portion output of the A/D converter connected to the position detection sensor 321-n of the detection roller N. The memory M34 stores an allowance DDA for double-sheet detection judgment of the A/D converter connected to the position detection sensor 321-n of the detection roller N.

[0259] The memory M35 stores a pre-correction threshold DD1 for double-sheet detection judgment of the A/D converter connected to the position detection sensor 321-n of the detection roller N. The memory M36 stores a threshold DD2 after one correction for double-sheet detection judgment of the A/D converter connected to the position detection sensor 321-n of the detection roller N. The memory M37 stores a threshold DD for double-sheet detection judgment of the A/D converter connected to the position detection sensor 321-n of the detection roller N.

[0260] The memory M38 stores a difference (SOn-1 - SOn) between a detection output of the A/D converter connected to the position detection sensor 321-n of a detection roller (N-1) and that of the A/D converter connected to the position detection sensor 321-n of the detection roller N. The memory M39 stores an absolute value |SOn-1 - SOn| of the difference between the detection output value of the A/D converter connected to the position detection sensor 321-n of the detection roller (N-1) and that of the A/D converter connected to the position detection sensor 321-n of the detection roller N. The memory M40 stores an allowance for sheet abnormality judgment.

[0261] In the printing press controller 350, the CPU 350A operates in accordance with a program stored in the ROM 350C while accessing the RAM 350B and storage 350G on the basis of various kinds of input information input through the interfaces 350S to 350X. As the program specific to this embodiment, the ROM 350C stores a program that stops the preset operation before start of printing and the printing operation upon reception of a sheet abnormality detection signal from the sheet abnormality detection apparatus 370.

[0262] In the sheet abnormality detection apparatus 370, the CPU 370A operates in accordance with a program stored in the ROM 370C while accessing the RAM 370B and storage 370N on the basis of various kinds of input information input through the interfaces 3700 to 370R. As the program specific to this embodiment, the ROM 370C stores a program that detects an abnormality occurring in part of the sheet, e.g., a folded corner formed on the sheet or a foreign substance attached to the sheet among sheets that are conveyed while overlapping to be shifted from each other in the convey direction, and double feed of the sheets. Double feed is an abnormal state in which two or more sheets which are fed one by one in an ordinary state are fed simultaneously in an overlapping manner. The operation of detecting a sheet abnormality in the sixth embodiment having the above arrangement will be described with reference to Figs. 43A to 44U.

[Determination of Usable Detection Roller and Calculation of Maximum Overlapping Sheet count]

[0263] Steps S501 to S510 in Figs. 44A and 44B represent a sequence of determining a usable detection roller among the seven detection rollers 313-1 to 313-7 on the basis of the sheet width and calculating the maximum overlapping sheet count from the sheet length.

[0264] When the operator inputs a sheet size (YES in step S501, Fig. 44A), the CPU 370A of the sheet abnormality detection apparatus 370 reads out the input sheet width from the sheet width setting unit 370G and stores it in the memory M10 (step S502), and reads out the input sheet length from the sheet length setting unit 370H and stores it in the memory M11 (step S503). The CPU 370A also reads out the conversion table of the sheet width to the usable detection roller number from the memory M12 (step S504) and the sheet width from the memory M10 (step S505 in Fig. 44B).

[0265] Using the conversion table of the sheet width to the usable detection roller number, the CPU 370A obtains the minimum number Nmin of the usable detection roller among the seven detection rollers 313-1 to 313-7 from the sheet width, and stores it in the memory M13 (step S506). Using the conversion table of the sheet width to the usable detection roller number, the CPU 370A obtains the maximum number Nmax of the usable detection roller among the seven detection rollers 313-1 to 313-7 from the sheet width, and stores it in the memory M14 (step S507).

[0266] The CPU 370A reads out the conversion table of the sheet length to the maximum overlapping sheet count from the memory M15 (step S508) and the sheet length from the memory M11 (step S509). Using the conversion table of the sheet length to the maximum overlapping sheet count, the CPU 370A obtains the maximum overlapping sheet count OSN from the sheet length and stores it in the memory M16 (step S510).

[0267] When the operator turns on the preset switch SW2 (YES in step S511, Fig. 44A), the operation of steps S512 to S605 shown in Figs. 44C to 44P of the operation sequence of the sheet abnormality detection apparatus 370 is performed. Midway along the operation sequence of the sheet abnormality detection apparatus 370, the operations of steps S400 to S415 shown in Figs. 43A to 43C of the operation sequence of the printing press controller are performed.

[Storage of Output Value of Position Detection Sensor 321-n]

[0268] Steps S511 to S534 in Fig. 44A and Figs. 44C to 44F represent a sequence of storing an output value actually output from the position detection sensor 321-n of a usable detection roller.

[0269] When the preset switch SW2 is turned on (YES in step S511, Fig. 44A), the CPU 370A reads out the minimum number Nmin of the usable detection roller from the memory M13 (step S512 in Fig. 44C), and stores the number Nmin as the count N in the memory M17 (step S513).

[0270] The CPU 370A reads out a reference output value for the offset value D/A converter 370M of the OP amplifier 370J connected to the position detection sensor 321-n of the detection roller N (step S514) from the memory M18. The CPU 370A then outputs the readout reference output value to the offset value D/A converter 370M of the OP amplifier 370J connected to the position detection sensor 321-n of the detection roller N (step S515).

[0271] The CPU 370A reads out the reference output value for the gain value D/A converter 370L of the OP amplifier 370J connected to the position detection sensor 321-n of the detection roller N from the memory M19 (step S516). The CPU 370A then outputs the readout reference output value to the gain value D/A converter 370L of the OP amplifier 370J connected to the position detection sensor 321-n of the detection roller N (step S517 in Fig. 44D).

[0272] The CPU 370A increments the count N by "1" and overwrites the new count N in the memory M17 (step S518). The CPU 370A reads out the maximum number Nmax of the usable detection roller from the memory M14 (step S519) and compares the number Nmax with the count N stored in the memory M17 (step S520). If the count N is not larger than the number Nmax (No in step S520), the process returns to step S514, and the CPU 370A repeatedly performs the process of steps S514 to S520 until the count N becomes larger than the maximum number Nmax of the usable detection roller.

[0273] When the count N becomes larger than the maximum number Nmax of the usable detection roller (YES in step S520), the sheet abnormality detection apparatus 370 transmits a preset operation instruction and the maximum overlapping sheet count OSN to the printing press controller 350 (step S521 in Fig. 44D, step S400 in Fig. 43A).

[0274] When the printing press controller 350 transmits a signal representing reception completion of the preset operation instruction and the maximum overlapping sheet count OSN to the sheet abnormality detection apparatus 370 (step S402 in Fig. 43A, YES in step S522, Fig. 44D), the printing press controller 350 performs the operations of steps S403 to S415, and the sheet abnormality detection apparatus 370 performs the operations of steps S523 to S605. First, the operations of steps S401 to S415 of the printing press controller 350 will be described.

[Preset Operation of Printing Press Controller 350]

[0275] Steps S401 to S415 in Figs. 43A to 43C represent a sequence of performing preparatory operation (preset operation) before printing which is necessary for the printing press to print.

[0276] The CPU 350A of the printing press controller 350 receives the preset operation instruction and the maximum overlapping sheet count OSN from the sheet abnormality detection apparatus 370 and stores the maximum overlapping sheet count OSN in the memory M1 (step S401 in Fig. 43A). After that, the CPU 350A transmits the reception completion signal of the preset operation instruction and the maximum number OSN of overlapping sheets to the sheet abnormality detection apparatus 370 (step S402).

[0277] The CPU 350A reads out the number of sheets fed up to the sheet abnormality detection unit 305-n from the memory M2 (step S403). The CPU 350A then adds the number of sheets fed up to the sheet abnormality detection unit 305-n to the maximum overlapping sheet count OSN to obtain the sheet feed count for the preset, and stores it in the memory M3 (step S404 in Fig. 43B). The obtained sheet feed count for the preset is stored in the memory M4 as the count K (step S405).

[0278] The CPU 350A transmits a feed start instruction to the feed device 350H (step S406) and outputs a connect signal to the feed device driving clutch 350I (step 5407). The CPU 350A also reads out a slower motion speed from the memory M5 (step S408) and outputs a slower motion speed instruction to the drive motor driver 3500 (step S409).

[0279] When the printing press reference phase detector 350R is turned on (YES in step S410, Fig. 43C), the CPU 350A decrements the count K by one and overwrites the new count K in the memory M4 (step S411). The process of steps S410 and S411 is repeated until the count K becomes "0".

[0280] When the count K becomes "0" in step S412, the CPU 350A transmits a stop instruction to the feed device 350H (step S413), and outputs a stop instruction to the drive motor driver 3500 (step S414) and a "disconnect" signal to the feed device driving clutch 350I (step S415).

[0281] The operations of steps S523 to S605 of the sheet abnormality detection apparatus 370 will be described.

[Calculation of Minimum Output Value SOnmin of Each Sensor 321-n]

[0282] Steps S523 to S549 in Figs. 44E to 44H represent a sequence of calculating the minimum output value SOnmin

of the position detection sensor 321-n of each detection roller N and storing it in the memory M23.

[0283] When the printing press controller 350 transmits the reception completion signal of the preset operation instruction and the maximum overlapping sheet count OSN to the sheet abnormality detection apparatus 370 (YES in step S522, Fig. 44D), the CPU 370A of the sheet abnormality detection apparatus 370 stores "1" as the count M in the memory M20 (step S523 in Fig. 44E).

[0284] If the drive motor rotary encoder 350Q outputs a zero pulse (YES in step S524) and the drive motor rotary encoder 350Q outputs a clock pulse (YES in step S525), the CPU 370A reads out the minimum number Nmin of the usable detection roller from the memory M13 (step S526) and overwrites the number Nmin as the count N in the memory M17 (step S527).

[0285] The CPU 370A reads, from the A/D converter 370K connected to the position detection sensor 321-n of the detection roller N, the output SOnm of the A/D converter 370K and stores it in the memory M21 at an Mth address position for the detection roller N (step S528).

[0286] The CPU 370A increments the count N by "1" and overwrites the new count N in the memory M17 (step S529 in Fig. 44F). The CPU 370A then reads out the maximum number Nmax of the usable detection roller from the memory M14 (step S530) and compares the count N with the number Nmax (step S531). If the count N is not larger than the number Nmax, the process returns to step S528, and the CPU 370A repeatedly performs the process of steps S528 to step S531 until the count N becomes larger than the number Nmax.

[0287] When the count N becomes larger than the number Nmax (YES in step S531), the CPU 370A increments the count M by "1" and overwrites the new count M in the memory M20 (step S532).

[0288] The CPU 370A reads out the sensor output storing pulse count PPN for the preset from the memory M22 (step S533) and compares the count M with the pulse count PPN (step S534). If the count M is not larger than the sensor output pulse count PPM for the preset (NO in step S534), the process returns to step S525, and the CPU 370A repeatedly performs the process of steps S525 to S534 until the count M becomes larger than the sensor output pulse count PPM for the preset.

[0289] Note that the sensor output pulse count PPM for the preset is set to be equal to the number of clock pulses of the drive motor rotary encoder 350Q corresponding to the total rotation angle through which, after the feed device 350H actually starts sheet feed in step S409 in Fig. 43B, the printing press rotates until reaching an appropriate rotary phase since the feed device 350H starts feeding sheets in a number obtained by adding the number of sheets to be fed up to the sheet abnormality detection unit 305-n to the maximum overlapping sheet count OSN before the feed device 350H starts next sheet feed, that is, the number of clock pulses of the drive motor rotary encoder 350Q that have been counted when sheets overlap by the maximum overlapping sheet count OSN at the sheet abnormality detection unit 305-n for the first time.

[0290] When the count M becomes larger than the sensor output pulse count PPM for the preset, the CPU 370A reads out the minimum number Nmin of the usable detection roller from the memory M13 (step S535 in Fig. 44G) and stores the number Nmin as the count N in the memory M17 (step S536). The CPU 370A also stores "2" as the count M in the memory M20 (step S537).

[0291] The CPU 370A reads out the first output value SOn1 of the A/D converter 370K connected to the position detection sensor 321-n of the detection roller N from the memory M21 (step S538). The CPU 370A then stores the output value SOn1 in the memory M23, which stores the minimum value SOnmin of the position detection sensor 321-n of each detection roller N, at the address position for the detection roller N (step S539).

[0292] The CPU 370A reads out the minimum output value SOnmin of the A/D converter 370K connected to the position detection sensor 321-n of the detection roller N from the memory M23 (step S540) and the Mth output value SOnm of the A/D converter 370K connected to the position detection sensor 321-n of the detection roller N from the memory M23 (step S541), and compares the two output values (step S542 in Fig. 44H).

[0293] If the minimum output value SOnmin of the A/D converter 370K connected to the position detection sensor 321-n of the detection roller N is not smaller than the Mth output value SOnm of the A/D converter 370K connected to the position detection sensor 321-n of the detection roller N (NO in step S542), the CPU 370A overwrites the output value SOnm in the memory M23 at the address position for the detection roller N (step S543). The CPU 370A then increments the count M by one and overwrites the new count N in the memory M20 (step s544).

[0294] If SOnmin is equal to or smaller than SOnm (YES in step S542), the process advances to step S544. The CPU 370A increments the count M by one and overwrites the new count N in the memory M20.

[0295] The CPU 370A reads out the sensor output pulse count PPM for the preset from the memory M22 (step S545) and compares the count M with the pulse count PPM (step S546). If the count M is not larger than the sensor output pulse count PPM (NO in step S546), the process returns to step S540, and the CPU 370A performs the process of steps S540 to S546 until the count M becomes larger than the pulse count PPN.

[0296] If the count M is larger than the pulse count PPM (YES in step S546), the CPU 370A increments the count N by "1" and overwrites the new count in the memory M17 (step S547). The CPU 370A then reads out the maximum number Nmax of the usable detection roller from the memory M14 (step S548) and compares the count N with the

number Nmax (step S549). If the count N is not larger than the number Nmax (NO in step S549), the process returns to step S537, and the CPU 370A repeatedly performs the process of steps S537 to S549 until the count N becomes larger than the number Nmax. If the count N is larger than the number Nmax (YES in step S549), the process advances to step S550 in Fig. 44I.

[Calculation of Maximum Output Value SOnmax of Each Position Detection Sensor 321-n]

[0297] Steps S550 to S564 in Figs. 44I and 44J represent a sequence of calculating the maximum output value SOnmax of the position detection sensor 321-n of each detection roller N and storing it in the memory M24.

[0298] The CPU 370A reads out a minimum number Nmin of the usable detection roller from the memory M13 (step S550 in Fig. 44I) and stores the number Nmin as the count N in the memory M17 (step 5551). The CPU 370A also stores "2" as the count M in the memory M20 (step S552).

[0299] The CPU 370A reads out the first output value SOn1 of the A/D converter 370K connected to the position detection sensor 321-n of the detection roller N from the memory M21 (step S553). The CPU 370A then stores the output value SOn1 in the memory M24 for storing the maximum output value SOnmax of the position detection sensor 321-n of each detection roller N at the address position for the detection roller N (step S554).

[0300] The CPU 370A reads out the maximum output value SOnmax of the A/D converter 370K connected to the position detection sensor 321-n of the detection roller N from the memory M24 (step S555) and the Mth output value SOnm of the A/D converter 370K connected to the position detection sensor 321-n of the detection roller N from the memory M21 (step S556), and compares the two output values (step S557 in Fig. 44J).

[0301] If the maximum output value SOnmax of the A/D converter 370K connected to the position detection sensor 321-n of the detection roller N is not larger than the Mth output value SOnm of the A/D converter 370K connected to the position detection sensor 321-n of the detection roller N (NO in step S557), the CPU 370A overwrites the output value SOnm in the memory M24 at the address position for the detection roller N (step S558). The CPU 370A then increments the count M by one and overwrites the new count M in the memory M20 (step S559).

[0302] If SOnmax is equal to or larger than SOnm (YES in step S557), the process advances to step S559. The CPU 370A increments the count M by one and overwrites the new count M in the memory M20.

[0303] The CPU 370A reads out the sensor output pulse count PPM for the preset from the memory M22 (step S560) and compares the count M with the pulse count PPM (step S561). If the count M is not larger than the pulse count PPM (NO in step S561), the process returns to step S555, and the CPU 370A repeatedly performs the process of steps S555 to S561 until the count M becomes larger than the pulse count PPM.

[0304] If the count M is larger than the pulse count PPM (YES in step S561), the CPU 370A increments the count N by "1" and overwrites the new count N in the memory M17 (step S562). The CPU 370A then reads out the maximum number Nmax of the usable detection roller from the memory M14 (step S563) and compares the count N with the number Nmax (step S564). If the count N is not larger than the number Nmax (NO in step S546), the process returns to step S552, and the CPU 370A repeatedly performs the process of steps S552 to S564 until the count N becomes larger than the number Nmax. If the count N is larger than the number Nmax (YES in step S564), the process advances to step S565 in Fig. 44K.

[Reading Out of Output Value at Overlapping Portion of Each Position Detection Sensor 321-n]

[0305] Steps S565 to S581 in Figs. 44K and 44L represent a sequence of reading out an output value at the overlapping sheet portion of each position detection sensor 321-n (to be described later) and storing it in the overlapping output memory M28 so as to calculate the threshold of double feed of each position detection sensor 321-n.

[0306] The CPU 370A reads out the minimum number Nmin of the usable detection roller from the memory M13 (step S565 in Fig. 44K) and stores the number Nmin in the memory 17 as the count N (step S566). The CPU 370A also stores "1" in the memory M25 as the count L (step S567) and stores "2" in the memory M20 as the count M (step S568).

[0307] The CPU 370A reads out the (M-1)th output value SOnm-1 and the Mth output value SOnm of the A/D converter 370K connected to the position detection sensor 321-n of the detection roller N from the memory M21 (steps S569, S570). The CPU 370A then subtracts the (M-1)th output value SOnm-1 from the Mth output value SOnm and stores the difference (SOnm - SOnm-1) between the Mth and (M-1)th values in the memory M26 at the (M-1)th address position for the detection roller N (step S571).

[0308] The CPU 370A reads out the overlapping portion judging threshold OD from the memory M27 (step S572) and compares the difference (SOnm - SOnm-1) with the threshold OD (step S573 in Fig. 44L). If the difference (SOnm - SOnm-1) is larger than the threshold OD (YES in step S573), the CPU 370A stores the Mth output value SOnm of the A/D converter 370K connected to the position detection sensor 321-n of the detection roller N in the overlapping portion output memory M28 at the Lth address position for the detection roller N (step S574). The CPU 370A then increments the count L by "1" and overwrites the new count L in the memory M25 (step S575).

[0309] In other words, if the difference between the (M-1)th and Mth outputs of the position detection sensor 321-n is larger than the overlapping portion judging threshold OD, the CPU 370A determines that a new overlapping portion has reached the sheet abnormality detection unit 305-n at the time point of the Mth output, and stores the Mth output as the output indicating the new overlapping portion. After that, the CPU 370A increments the count M by "1" and overwrites the new count M in the memory M20 (step S576).

[0310] If the difference (SOnm - SOnm-1) is not larger than the threshold OD (NO in step S573), the process advances to step S576. The CPU 370A increments the count M by "1" and overwrites the new count M in the memory M20.

[0311] The CPU 370A reads out the sensor output pulse count PPM for the preset from the memory M22 (step S577) and compares the count M with the pulse count PPM (step S578). If the count M is not larger than the pulse count PPM (NO in step S578), the process returns to step S569, and the CPU 370A repeatedly performs the process of steps S569 to S578 until the count M becomes larger than the pulse count PPM.

[0312] If the count M is larger than the sensor output pulse count PPM (YES in step S578), the process returns to step S579, and the CPU 370A increments the count N by "1" and overwrites the new count N in the memory M17.

[0313] The CPU 370A reads out the maximum number Nmax of the usable detection roller from the memory M14 (step S580) and compares the count N with the number Nmax (step S581). If the count N is not larger than the number Nmax (NO in step S581), the process returns to step S567, and the CPU 370A repeatedly performs the process of steps S567 to S581 until the count N becomes larger than the number Nmax. If the count N is larger than the number Nmax (YES in step S581), the process advances to step S582 in Fig. 44M.

[Setting of Offset Value of Each Position Detection Sensor 321-n]

[0314] Steps S582 to S586 in Fig. 44M represent a sequence of setting the offset value of each position detection sensor 321-n using the minimum output value SOnmin of the position detection sensor 321-n of each detection roller N calculated in steps S523 to S549 described above.

[0315] The CPU 370A reads out the minimum number Nmin of the usable detection roller from the memory M13 (step S582 in Fig. 44M) and stores the number Nmin in the memory M17 as the count N (step S583).

[0316] The CPU 370A reads out the minimum output value SOnmin of the A/D converter 370K connected to the position detection sensor 321-n of the detection roller N from the memory M23 (step S584). The CPU 370A calculates the output value for the offset value D/A converter 370M of the OP amplifier 370J connected to the position detection sensor 321-n of the detection roller N from the minimum output value SOnmin and stores it in the memory M29 at the address position for the detection roller N (step S585). Then, the CPU 370A outputs a value read out from the memory M29 to the offset value D/A converter 370M (step S586).

[Setting of Gain Value of Each Position Detection Sensor 321-n]

[0317] Steps S587 to S592 in Fig. 44N represent a sequence of setting the gain value of each position detection sensor 321-n from the maximum output value SOnmax of the position detection sensor 321-n of each detection roller calculated by steps S550 to S564 described above and the minimum output value SOnmin of the position detection sensor 321-n of each detection roller calculated in steps S523 to S549 described above.

[0318] The CPU 370A reads out the maximum output value SOnmax of the A/D converter 370K connected to the position detection sensor 321-n of the detection roller N from the memory M24 (step S587) and the minimum output value SOnmin of the same A/D converter 370K from the memory M23 (step S588). The CPU 370A subtracts the minimum output value SOnmin from the maximum output value SOnmax and stores the difference (SOnmax = SOnmin) between the two values in the memory M30 at the address position for the detection roller N (step S589).

[0319] The CPU 370A calculates the gain value of the OP amplifier 370J connected to the position detection sensor 321-n of the detection roller N from the difference (SOnmax - SOnmin) and stores it in the memory M31 at the address position for the detection roller N (step S590). The CPU 370A calculates an output value for the gain value D/A converter 370L of the OP amplifier 370J from the gain value and stores it in the memory M32 at the address position for the detection roller N (step S591). The CPU 370A then outputs a value read out from the memory M32 to the gain value D/A converter 370L (step S592).

[Setting of Threshold of Double Sheet of Each Position Detection Sensor 321-n]

[0320] Steps S593 to S605 in Figs. 44O and 44P represent a sequence of calculating the threshold of double sheet of each position detection sensor 321-n on the basis of the output value indicating an overlapping sheet portion of each position detection sensor obtained in steps S565 to S581 described above.

[0321] The CPU 370A reads out the maximum overlapping sheet count OSN from the memory M16 (step S593 in Fig. 44O). The CPU 370A then reads out, of overlapping portion outputs from the A/D converter 370K connected to the

position detection sensor 321-n of the detection roller N, the (maximum overlapping sheet count OSN - 1)th value and the (maximum overlapping sheet count OSN)th value from the memory M28 (steps S594, S595).

[0322] The CPU 370A subtracts the (maximum overlapping sheet count OSN - 1)th value from the (maximum overlapping sheet count OSN)th value and stores the difference between the two values in the memory M33 at the address position for the detection roller N (step S596). The CPU 370A divides the difference between the two values by 2, and stores the quotient in the memory M34 at the address position for the detection roller N as the allowance DDA for double-sheet detection judgment of the A/D converter 370K connected to the position detection sensor 321-n of the detection roller N (step S597). The CPU 370A adds the allowance DDA for double-sheet detection judgment to the (maximum overlapping sheet count OSN)th value, and stores the sum in the memory M35 at the address position for the detection roller N as the pre-correction threshold DD1 for double-sheet detection judgment of the A/D converter 370K connected to the position detection sensor 321-n of the detection roller N (step S598).

[0323] The CPU 370A reads out an output value for the offset value D/A converter 370M of the OP amplifier 370J connected to the position detection sensor 321-n of the detection roller N from the memory M29 (step S599 in Fig. 44P). The CPU 370A adds the output value for the offset value D/A converter 370M to the pre-correction threshold DD1 for double-sheet detection judgment, and stores the sum in the memory M36 at the address position for the detection roller N as the threshold DD2 after one correction for double-sheet detection judgment of the A/D converter 370K connected to the position detection sensor 321-n of the detection roller N (step S600).

[0324] The CPU 370A reads out the gain value of the OP amplifier 370J connected to the position detection sensor 321-n of the detection roller N from the memory M31 (step S601). The CPU 370A then multiplies the threshold DD2 after one correction for double-sheet detection judgment by the gain value of the OP amplifier 370J, and stores the product in the memory M37 at the address position for the detection roller N as the threshold DD for double-sheet detection judgment of the A/D converter 370K connected to the position detection sensor 321-n of the detection roller N (step S602).

[0325] The CPU 370A increments the count N by "1" and overwrites the new count N in the memory M17 (step S603). The CPU 370A then reads out the maximum number Nmax of the usable detection roller from the memory M14 (step S604) and compares the count N with the number Nmax (step S605). If the count N is not larger than the number Nmax (NO in step S605), the process returns to step S584, and the CPU 370A repeatedly performs the process of steps S584 to S605 until the count N becomes larger than the number Nmax. If the count N is larger than the number Nmax (YES in step S605), the process advances to step S606 in Fig. 44A.

[Start of Printing]

[0326] When the printing start switch SW1 of the printing press controller 350 is turned on (YES in step S416, Fig. 43A), the CPU 350A of the printing press controller 350 transmits a printing start instruction to the sheet abnormality detection apparatus 370 (step S417 in Fig. 43D) and a sheet feed start instruction to the feed device 350H (step S418), and outputs a "connect" signal to the feed device driving clutch 350I (step S419).

[0327] The CPU 350A reads out a printing speed for the printing speed setting unit 350Y and stores it in the memory M6, and outputs the printing speed instruction read out from the memory M6 to the drive motor driver 3500 (step 5421). The CPU 350A then outputs an impression throw-on instruction to the respective printing units 350N-1 to 350N-4 (step S422). This starts printing.

[Start of Sheet Abnormality Detecting Operation]

[0328] Steps S607 to S631 in Figs. 44Q to 44S represent a sequence of detecting a sheet abnormality such as a folded corner occurring on a sheet fed from the feed device 350H onto the feeder board 3, or a foreign substance attached to the sheet. Steps S632 to S645 in Figs. 44T and 44U represent a sequence of detecting a double feed abnormality in the sheets fed from the feed device 350H onto the feeder board 3.

[0329] When the printing press controller 350 transmits a printing start instruction (YES in step S606, Fig. 44A), the CPU 370A of the sheet abnormality detection apparatus 370 checks whether the drive motor rotary encoder 350Q outputs a zero pulse and a clock pulse (steps S607, S608 in Fig. 44). If the pulse pulses are output (YES in steps S607, S608), the CPU 370A reads out the minimum number Nmin of the usable detection roller from the memory M13 (step S609) and stores the number Nmin in the memory M17 as the count N (step S610).

[0330] The CPU 370A reads out the output SOnm of the A/D converter 370K connected to the position detection sensor 321-n of the detection roller N, and stores it in the memory M21 at the detection address position for the detection roller N (step S611).

[0331] The CPU 370A increments the count N by "1" and overwrites the new count in the memory M17 (step S612). The CPU 370A then reads out the maximum number Nmax of the usable detection roller from the memory M14 (step S613) and compares the count N with the number Nmax (step S614). If the count N is not larger than the number Nmax

(NO in step S614), the process returns to step S611, and the CPU 370A repeatedly performs the process of steps S611 to S614 until the count N becomes larger than the number Nmax.

[0332] When the count N becomes larger than the number Nmax (YES in step S614), the CPU 370A reads out the minimum number Nmin of the usable detection roller from the memory M13 (step S615 in Fig. 44R), and stores "number Nmin + 1" in the memory M17 as the count N (step S616).

[0333] The CPU 370A reads out the detection output SOn-1 of the A/D converter 370K connected to the position detection sensor 321-(n-1) of the detection roller (N-1) from the memory M21 (step S617) and the detection output SOn of the A/D converter 370K connected to the position detection sensor 321-n of the detection roller N from the memory M21 (step S618). The CPU 370A then subtracts the detection output SOn from the detection output SOn-1 and stores the detection output difference (SOn-1 - SOn) in the memory M38 at the (N-1)th address position (step S619). The CPU 370A also calculates the absolute value |SOn-1 - SOn| of the detection output difference (SOn-1 - SOn) and stores it in the memory M39 at the (N-1)th address position (step S620).

[0334] The CPU 370A reads out a sheet abnormality judging allowance from the memory M40 (step S621) and compares the absolute value |SOn-1 - SOn| of the detection output difference with the sheet abnormality judging allowance (step S622 in Fig. 44S). If the absolute value |SOn-1 - SOn| of the detection output difference is larger than the sheet abnormality judging allowance (NO in step S622), the CPU 370A determines that a sheet abnormality occurs, i.e., a corner of a sheet is folded or a foreign substance is attached to part of a sheet, and performs the following process.

[0335] The CPU 370A transmits a feed stop instruction for the printing units 350N-1 to 350N-4 to the printing press controller 350 (step S623) and displays "Sheet Abnormality" on the display 370E (step S624). As will be described later, in step S424 in Fig. 43E, if the printing press controller 350 transmits a feed stop instruction reception completion signal for the printing units 350N-1 to 350N-4 (YES in step S625), the operator turns on the reset switch SW3 (YES in step S626). Thus, the CPU 370A deletes "Sheet Abnormality" displayed on the display 370E (step S627) and transmits a reset instruction to the printing press controller 350 (step S628).

[0336] In the printing press controller 350, in step S623 in Fig. 44A, when the sheet abnormality detection apparatus 370 transmits a feed stop instruction for the printing units 350N-1 to 350N-4 (YES in step S423, Fig. 43A), the CPU 350A of the printing press controller 350 transmits a feed stop instruction reception completion signal for the printing units 350N-1 to 350N-4 to the sheet abnormality detection apparatus 370 (step S424 in Fig. 43E). The CPU 370A then reads out the sheet feed count, i.e., the number of sheets fed from the sheet abnormality detection unit 305-n up to the front lay 330 from the memory M7 (step S425), and stores the sheet feed count in the memory M4 as the count K (step S426).

[0337] At this time, if the printing press reference phase detector 350R is turned on (YES in step S427), the CPU 350A subtracts the count K by "1" and overwrites the new count K in the memory M4 (step S428). If the count K becomes "0" accordingly (YES in step S429), the CPU 350A transmits a stop instruction to the feed device 350H (step S430). If the count K does not become "0" (NO in step S429), the process returns to step S427, and the CPU 350A repeatedly performs the process of steps S427 to' S429 until the count K becomes "0", and transmits a stop instruction to the feed device 350H (step S430).

[0338] Subsequently, the CPU 350A outputs a stop instruction to the front lay stopping air cylinder valve 350K (step S431 in Fig. 43F), a stop instruction to the swing gripping operation stopping air cylinder valve 350M (step S432), an impression throw-off instruction to the printing units 350N-1 to 350N-4 (step S433), a stop instruction to the drive motor driver 3500 (step S434), and a "disconnect" signal to the feed device driving clutch 350I (step S435).

[0339] In step S628 in Fig. 44S, if the sheet abnormality detection apparatus 370 transmits a reset instruction (YES in step S436), the CPU 350A of the printing press controller 350 outputs a stop cancel instruction to the front lay stopping air cylinder valve 350K (step S437) and a stop cancel instruction to the swing gripping operation stopping air cylinder valve 350M (step S438), to prepare for subsequent printing.

[0340] In step S622 in Fig. 44S, if the absolute value |SOn-1 - SOn| of the difference between the detection outputs of the A/D converters 370K connected to the detection rollers (N-1) and N, respectively, is equal to or less than the sheet abnormality judging allowance (YES in step S622), the CPU 370A of the sheet abnormality detection apparatus 370 increments the count N by "1" and overwrites the new count N in the memory M17 (step S629).

[0341] The CPU 370A reads out the maximum number Nmax of the usable detection roller from the memory M14 (step S630) and compares the count N with the number Nmax (step S631). If the count N is not larger than the number Nmax (NO in step S631), the process returns to step S617, and the CPU 370A repeatedly performs the process of steps S617 to S631 until the count N becomes larger than the number Nmax.

[0342] When the count N becomes larger than the number Nmax (YES in step S631), the CPU 370A reads out the minimum number Nmin of the usable detection roller from the memory M13 (step S632 in Fig. 44T) and stores the number Nmin in the memory M17 as the count N (step S633).

[0343] The CPU 370A reads out the detection output SOn of the A/D converter 370K connected to the position detection sensor 321-n of the detection roller N from the memory M21 (step S634) and the double-sheet detection judging threshold DD of the A/D converter 370K connected to the position detection sensor 321-n of the detection roller N from the memory

M37 (step S635). The CPU 370A then compares the detection output SOn with the threshold DD (step S636).

[0344] If the detection output SOn is larger than the threshold DD (NO in step S636), the CPU 370A determines that a double-sheet abnormality occurs in the sheets fed from the feed device 350H onto the feeder board 3, and performs the following process.

[0345] The CPU 370A transmits a feed stop instruction for the printing units 350N-1 to 350N-4 to the printing press controller 350 (step S637 in Fig. 44U) and displays "Double-Feed Abnormality" on the display 370E (step S638). In step S424 in Fig. 43E, if the printing press controller 350 transmits a feed stop instruction reception completion signal for the printing units 350N-1 to 350N-4 (YES in step S639), the operator turns on the reset switch SW3 (YES in step S640). Thus, the operator deletes "Double-Feed Abnormality" displayed on the display 370E (step S641) and transmits a reset instruction to the printing press controller 350 (step S642).

[0346] The operation of the printing press controller 350 after the feed stop instruction is transmitted to it in step S637 is the same as the operation (see steps S423 to S438 in Figs. 43A, 43E, and 43F) of the printing press controller 350 when an abnormality occurs, e.g., a corner of a sheet is folded or a foreign substance is attached to the sheet. Note that the reset instruction in step S436 in Fig. 43F is a reset instruction to be transmitted to the printing press controller 350 in Fig. 44U.

[0347] In step S636 in Fig. 44T, if the detection output SOn of the A/D converter 370K connected to the position detection sensor 321-n of the detection roller N is not larger than the double-sheet detection judging threshold DD of the A/D converter 370K connected to the position detection sensor 321-n of the detection roller N (YES in step S636), the CPU 370A of the sheet abnormality detection apparatus 370 increments the count N by "1" and overwrites the new count N in the memory M17 (step S643).

[0348] The CPU 370A reads out the maximum number Nmax of the usable detection roller from the memory M14 (step S644) and compares the count N with the number Nmax (step 5645). If the count N is not larger than the number Nmax (NO in step S645), the process returns to step S634, and the CPU 370A repeatedly performs the process of steps S634 to S645 until the count N becomes larger than the number Nmax. When the count N becomes larger than the number Nmax (YES in step S645), the abnormality detecting operation is ended.

[0349] In this manner, according to the sixth embodiment, the plurality of detection rollers 313-n are arranged in the widthwise direction of the sheet, and the plurality of position detection sensors 321-n are provided to respectively correspond to the plurality of detection rollers 313-n. Outputs from the plurality of position detection sensors 321-n are compared with each other to detect a sheet abnormality. Accordingly, an abnormal state occurring in part of the sheet, e.g., a folded corner of a sheet or a foreign substance attached to the sheet, can be detected regardless of the overlapping state of the sheets under conveyance. Hence, an abnormal state occurring in part of the sheet at the start or end of sheet, feed that cannot be conventionally detected in the sheet convey apparatus in which sheets are conveyed while overlapping to be shifted from each other in the convey direction, can be detected.

[0350] As sheet abnormality detection takes place upstream of the feeder board 3 in the sheet convey direction, once a sheet abnormality is detected, the swing arm shaft pregripper does not feed a defective sheet to the printing press. Therefore, the printing press, the jacket of the impression cylinder, and the like will not be damaged.

[0351] As described above, the CPU 370A of the sheet abnormality detection apparatus 370 operates in accordance with the program stored in the ROM 370C to implement at least a sheet abnormality detector/calculator 381 and double-feed detector/calculator 382 shown in Fig. 45. The sheet abnormality detector/calculator 381 compares an output from at least one position detection sensor with an output from another position detection sensor among the plurality of position detection sensors 321-1 to 321-7 belonging to the plurality of sheet abnormality detection units 305-1 to 305-7, and detects a sheet abnormality on the basis of the comparison result. More specifically, the sheet abnormality detector/calculator 381 performs the process of steps S607 to S628 in Figs. 44Q to 44S.

[0352] The sheet abnormality detector/calculator 381 includes a subtraction unit 381A and judgment unit 381B. The subtraction unit 381A obtains the difference between the output from at least one position detection sensor and the output from the other position detection sensor (steps S617 to S619 in Fig. 44R). The judgment unit 381B compares the absolute value of the difference obtained by the subtraction unit 381A with the preset allowance, and determines that a sheet abnormality has occurred when the absolute value of the difference is larger than the allowance (steps S620 to S622 in Figs. 44R and 44S).

[0353] The double-feed detector/calculator 382 compares the output from at least one position detection sensor among the plurality of position detection sensors 321-1 to 321-7 with a preset reference value, and detects sheet double feed on the basis of the comparison result. More specifically, the double-feed detector/calculator 382 performs the process of steps S629 to S642 in Figs. 44S to 44U.

[0354] In all of the embodiments described above, a detection roller is employed as the abutting member. A rotatably supported roll may be employed as the abutting member. Also, as the abutting member, a rod-like member may be employed which is supported between a pair of left and right frames and cantilevered by a stud and the abutting portion of which is coated with a low-friction member that does not interfere with sheet conveyance.

[0355] In the above embodiments, an abnormal state is detected from a relative positional shift between the first

detection roller 112 or 236 and second detection roller 142 or 241. Accordingly, an abnormal state occurring in part of the sheet, e.g., a folded corner of the sheet or a foreign substance attached to the sheet, can be detected regardless of the overlapping state of the sheets under conveyance. Hence, an abnormal state occurring in part of the sheet at the start or end of sheet feed, that cannot be conventionally detected in the sheet convey apparatus in which sheets are conveyed while overlapping to be shifted from each other in the convey direction, can be detected.

[0356] When a folded corner, a foreign substance, or the like passes some of the detection rollers 112, 142, 236, and 241, the eccentric shaft 105, 135, 235, or 240 pivots about its axis as the pivot center. Due to this pivot motion, the detection roller 112, 142, 236, or 241 having an axis eccentric from the axis of the eccentric shaft 105, 135, 235, or 240 is raised entirely in the axial direction. Hence, even if the folded corner, the foreign substance, or the like passes one end side of the detection roller 112, 142, 236, or 241 in the axial direction, the axis of the detection roller 112, 142, 236, or 241 is not inclined, but the detection roller 112, 142, 236, or 241 is raised entirely. Thus, the detection roller 112, 142, 236, or 241 is raised accurately in accordance with the height of the folded corner or foreign substance. This allows accurate detection of the relative positional shift between the first detection roller 112 or 236 and second detection roller 142 or 241, thus preventing erroneous detection.

[0357] The axis of the detection roller 112, 142, 236, or 241 is not inclined, but the detection roller 112, 142, 236, or 241 is raised entirely. Accordingly, rotation of the detection roller 112, 142, 236, or 241 the two ends of which are rotatably supported by the bearings is not interfered with, allowing smooth detection.

[0358] The relative positional shift between the detection rollers 112 and 142 or between the detection rollers 236 and 241 is detected from the pivot motion of the eccentric shaft 105, 135, 235, or 240 itself that supports the detection roller 112, 142, 236, or 241 without interposing any lever or the like between the detection rollers 112, 142, 236, and 241 and the abnormality detection unit 177. This can decrease the inertia of the detection rollers 112, 142, 236, and 241, thus improving the response characteristics of the detection rollers 112, 142, 236, and 241 with respect to the sheet.

Claims

1. A sheet abnormality detection apparatus **characterized by** comprising:

a plurality of abutting members (112, 142, 236, 241, 251A - 251D, 252A - 252E, 313-1 - 313-7) which move upon coming into contact with at least one of sheets conveyed to overlap while being shifted from each other in a convey direction and an object attached to a sheet, said plurality of abutting members being disposed side by side in any direction perpendicular to a sheet convey direction; and
abnormality detection means (177, 301-5 - 305-7) for detecting a sheet abnormality on the basis of any relative positional shift among said plurality of abutting members.

2. An apparatus according to claim 1, wherein said abnormality detection means comprises a photoelectric sensor (202, 204, 245, 246).

3. An apparatus according to claim 2, further comprising
a first lever (227) which supports a first abutting member (236) as one of said plurality of abutting members and moves interlocked with said first abutting member, and
a second lever (233) which supports a second abutting member (241) as another one of said plurality of abutting members and adjacent to said first abutting member and moves interlocked with said second abutting member,
wherein said photoelectric sensor (245, 246) detects a relative positional shift between said first lever and said second lever.

4. An apparatus according to claim 3, wherein said photoelectric sensor comprises
a light-projecting unit (245) provided to one of said first lever and said second lever, and
a light-receiving unit (246) provided to the other one of said first lever and said second lever.

5. An apparatus according to claim 2, further comprising light reception amount changing means (208) provided to one side of a first abutting member (112) and a second abutting member (142) as two ones of said plurality of abutting members,
wherein said photoelectric sensor (202, 204) is provided to the other side of said first abutting member and said second abutting member, and
said light reception amount changing means changes a light reception amount of said photoelectric sensor in accordance with a relative positional shift between said first abutting member and said second abutting member.

6. An apparatus according to claim 5, wherein said photoelectric sensor comprises
a light-projecting unit (202) provided to one end side of said light reception amount changing means, and
a light-receiving unit (204) provided to the other end side of said light reception amount changing means.

7. An apparatus according to claim 6, further comprising
a first eccentric shaft (105) which is pivotally supported and rotatably supports said first abutting member, said first eccentric shaft being eccentric from a rotation center of said first abutting member, and
a second eccentric shaft (135) which is pivotally supported and rotatably supports said second abutting member, said second eccentric shaft being eccentric from a rotation center of said second abutting member,
wherein said light reception amount changing means is provided to one side of said first eccentric shaft and said second eccentric shaft, and
said photoelectric sensor is provided to the other side of said first eccentric shaft and said second eccentric shaft.

8. An apparatus according to claim 2, further comprising a through hole (208a) formed in one side of a first abutting member (112) and a second abutting member (142) as two adjacent ones of said plurality of abutting members,
wherein said photoelectric sensor (202, 204) is provided to the other side of said first abutting member and said second abutting member, and
said photoelectric sensor receives light passing through said through hole, and a light reception amount of said photoelectric sensor changes in accordance with a positional shift between said through hole and said photoelectric sensor which accompanies a relative positional shift between said first abutting member and said second abutting member.

9. An apparatus according to claim 8, further comprising
a first eccentric shaft (105) which is pivotally supported and rotatably supports said first abutting member, said first eccentric shaft being eccentric from a rotation center of said first abutting member, and
a second eccentric shaft (135) which is pivotally supported and rotatably supports said second abutting member, said second eccentric shaft being eccentric from a rotation center of said second abutting member,
wherein through hole is formed in one side of said first eccentric shaft and said second eccentric shaft, and
said photoelectric sensor is provided to the other side of said first eccentric shaft and said second eccentric shaft.

10. An apparatus according to claim 1, wherein said abnormality detection means comprises a first press detection sensor (174, 183) which is provided to one side of a first abutting member (112) and a second abutting member (142) as two ones of said plurality of abutting members and detects a press state against one of the other one and the other side of said first abutting member and said second abutting member.

11. An apparatus according to claim 10, wherein said abnormality detection means further comprises a second press detection sensor (130, 184) which is provided to the other side of said first abutting member and said second abutting member and detects a press state against one of one and one side of said first abutting member and said second abutting member.

12. An apparatus according to claim 10, wherein said first press detection sensor comprises a detection switch (174) comprising a detection element (174a) which is movably supported and abuts against one of the other one and the other side of said first abutting member and said second abutting member, and a detector which detects that said detection element has moved for a predetermined amount.

13. An apparatus according to claim 10, wherein said first press detection sensor comprises a sensor-attached ball plunger (174).

14. An apparatus according to claim 13, further comprising one (107b) of a recess and a hole which is formed on the other side of said first abutting member and said second abutting member and which faces a distal end of said sensor-attached ball plunger,
wherein said sensor-attached ball plunger detects that said distal end thereof has disengaged from one of said recess and said hole from a relative positional displacement between said first abutting member and said second abutting member.

15. An apparatus according to claim 10, wherein said first press detection sensor comprises a pressure sensor (183) which detects a press force applied by one of one and one side of said first abutting member and said second abutting member.

16. An apparatus according to claim 1, wherein said abnormality detection means comprises a proximity sensor (186, 187) which detects proximity with one of one and one side of a first abutting member (112) and a second abutting member (142) as two ones of said plurality of abutting members.

17. An apparatus according to claim 1, wherein said abnormality detection means comprises distance detection means (188) for detecting a distance with respect to one of one and one side of a first abutting member (112) and a second abutting member (142) as two ones of said plurality of abutting members.

18. An apparatus according to claim 1, further comprising overlap feed detection means (158) for detecting that at least one of a first abutting member (112) and a second abutting member (142) as two ones of said plurality of abutting members has moved for not less than a predetermined amount.

19. An apparatus according to claim 18, wherein said overlap feed detection means comprises
a detection target body (157) which moves as one of said first abutting member and said second abutting member moves, and
an overlap feed detector (170) which detects that said detection target body has moved for not less than a predetermined amount.

20. An apparatus according to claim 19, further comprising adjusting means (180) for adjusting positions of said overlap feed detector and said detection target body relative to each other.

21. An apparatus according to claim 1, further comprising
a first eccentric shaft (105, 235) which is pivotally supported and rotatably supports a first abutting member (112, 236) as one of said plurality of abutting means, said first eccentric shaft being eccentric from a rotation center of said first abutting member, and
a second eccentric shaft (135, 241) which is pivotally supported and rotatably supports a second abutting member (142, 241) as another one of said plurality of abutting member, said second eccentric shaft being eccentric from a rotation center of said second abutting member,
wherein said abnormality detection means detects a relative positional shift between said first eccentric shaft and said second eccentric shaft.

22. An apparatus according to claim 1, further comprising
a first detecting portion (251) comprising said plurality of abutting members (251A - 251D), and
a second detecting portion (252) comprising other plurality of abutting members (252A - 252D) having the same function as that of said plurality of abutting members, said second detecting portion being spaced apart from said first detecting portion in the sheet convey direction, said other plurality of abutting members being disposed side by side in a direction perpendicular to the sheet convey direction, and gaps among adjacent abutting members of said second detecting portion not overlapping gaps among adjacent abutting members of said first detecting portion when seen in the sheet convey direction.

23. An apparatus according to claim 22,
wherein said abnormality detection means comprises a plurality of sensors (253A - 253C, 254A - 254D) which detect a relative positional shift between said adjacent abutting members of each of said first detecting portion and said second detecting portion, and
said apparatus further comprises a controller (260) which selects a sensor to be used for sheet abnormality detection among said plurality of sensors in accordance with a sheet size.

24. An apparatus according to claim 1, wherein said abnormality detection means comprises
a plurality of abutting member position detection means (321-1 - 321-7) for detecting positions of said plurality of abutting members, respectively, and
operational means (370A) for comparing an output from at least one abutting member position detection means with an output from another abutting member position detection means among outputs from said plurality of abutting member position detection means and detects a sheet abnormality on the basis of a comparison result.

25. An apparatus according to claim 24, wherein said operational means comprises
subtracting means (381A) for obtaining a difference between the output from said at least one abutting member position detection means and the output from said other abutting member position detection means, and
judging means (381B) for comparing an absolute value of a difference obtained by said subtracting means with a

preset allowance, and determining a sheet abnormality when the absolute value of the difference is larger than the allowance.

26. An apparatus according to claim 24, wherein said operational means comprises double-feed detection means (382) for comparing the output from at least one abutting member position detection means among the outputs from said plurality of abutting member position detection means with a preset reference value, and detecting a double sheet feed on the basis of a comparison result.

27. An apparatus according to claim 24, wherein said plurality of abutting members and said abnormality detection means are provided upstream of a feeder board (3) in the sheet convey direction, said feeder board is included in sheet convey means (91 - 93) for conveying a sheet fed from a feed device to printing means (6), and said feed device comprises a suction device (10) which feeds out stacked sheets one by one to overlap to be shifted from each other in the convey direction.

28. An apparatus according to claim 1, wherein said abutting members are moved in a direction perpendicular to a sheet surface by at least one of a sheet that passes said abutting members and an object attached to the sheet.

29. A sheet abnormality detection method **characterized by** comprising the steps of:

conveying sheets to overlap while being shifted from each other in a convey direction;
detecting positions of a plurality of abutting members (112, 142, 236, 241, 251A - 251D, 252A - 252E, 313-1 - 313-7) which move upon coming into contact with at least one of a sheet and an object attached to a sheet, the plurality of abutting members being disposed side by side in a direction perpendicular to a sheet convey direction, and
comparing a position of at least one abutting member with a position of another abutting member among the plurality of abutting members and detecting a sheet abnormality on the basis of a comparison result.

30. A method according to claim 29, wherein the step of detecting positions comprises the steps of
obtaining a difference between information on a position of at least one abutting member and information on a position of said other abutting member, and
comparing an absolute value of the difference with a preset allowance and determining a sheet abnormality when the absolute value of the difference is larger than the allowance.

31. A method according to claim 29, further comprising the step of comparing a position of at least one abutting member among the plurality of abutting members with a preset reference value and detecting a sheet double feed on the basis of a comparison result.

32. A method according to claim 29, wherein the step of conveying further comprises the steps of
feeding stacked sheets one by one by a suction device (10) onto a feeder board (3) to overlap while being shifted from each other in the convey direction, and
feeding the sheets from the feeder board to printing means (6),
wherein the step of detecting positions and the step of detecting an abnormality are performed while the sheet is fed to the feeder board by the suction device.

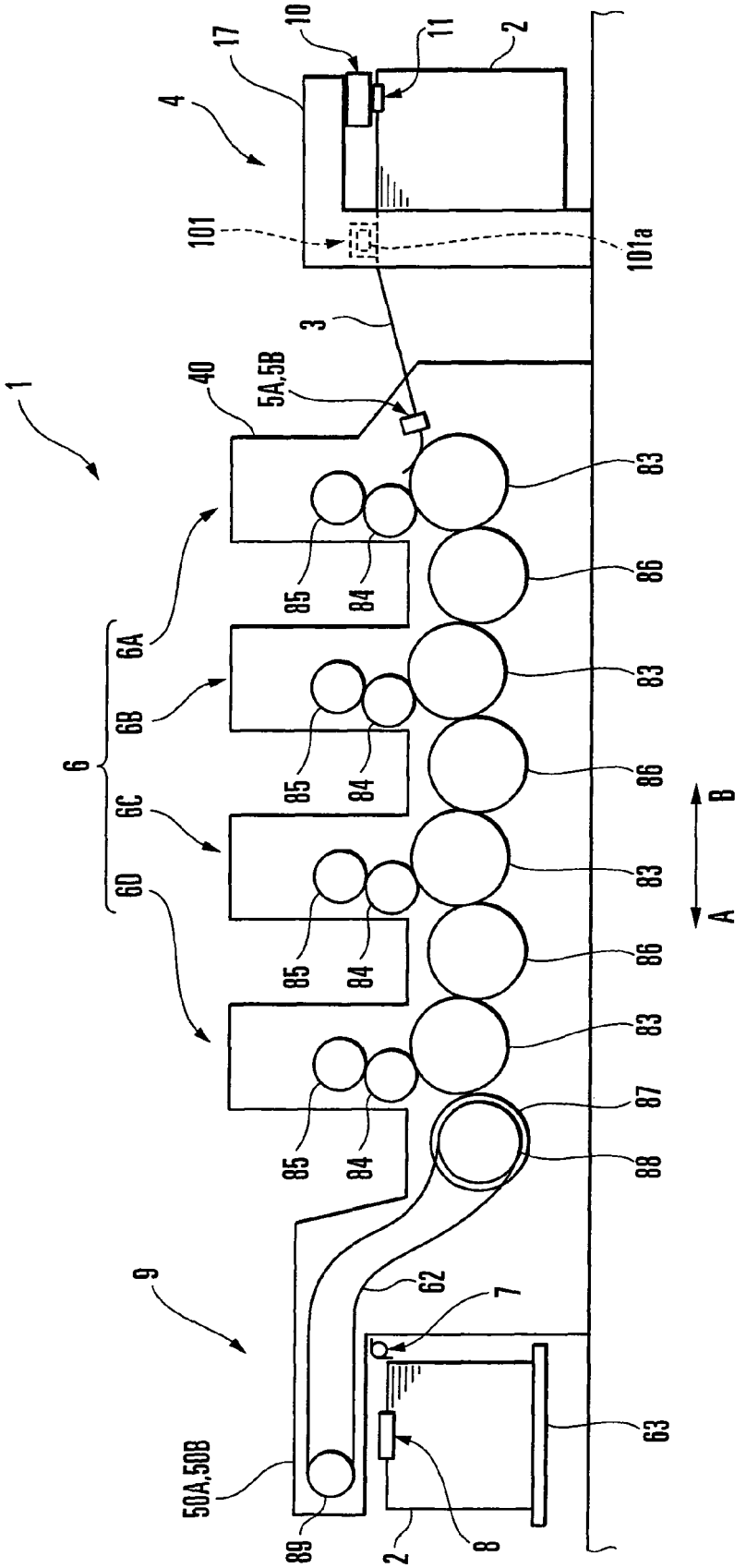
1
2
3
4
6
6A
6B
6C
6D
7
8
9
10
11
17
40
5A,5B
50A,50B
62
63
83
84
85
86
87
88
89
101
101a
A
B

FIG. 1

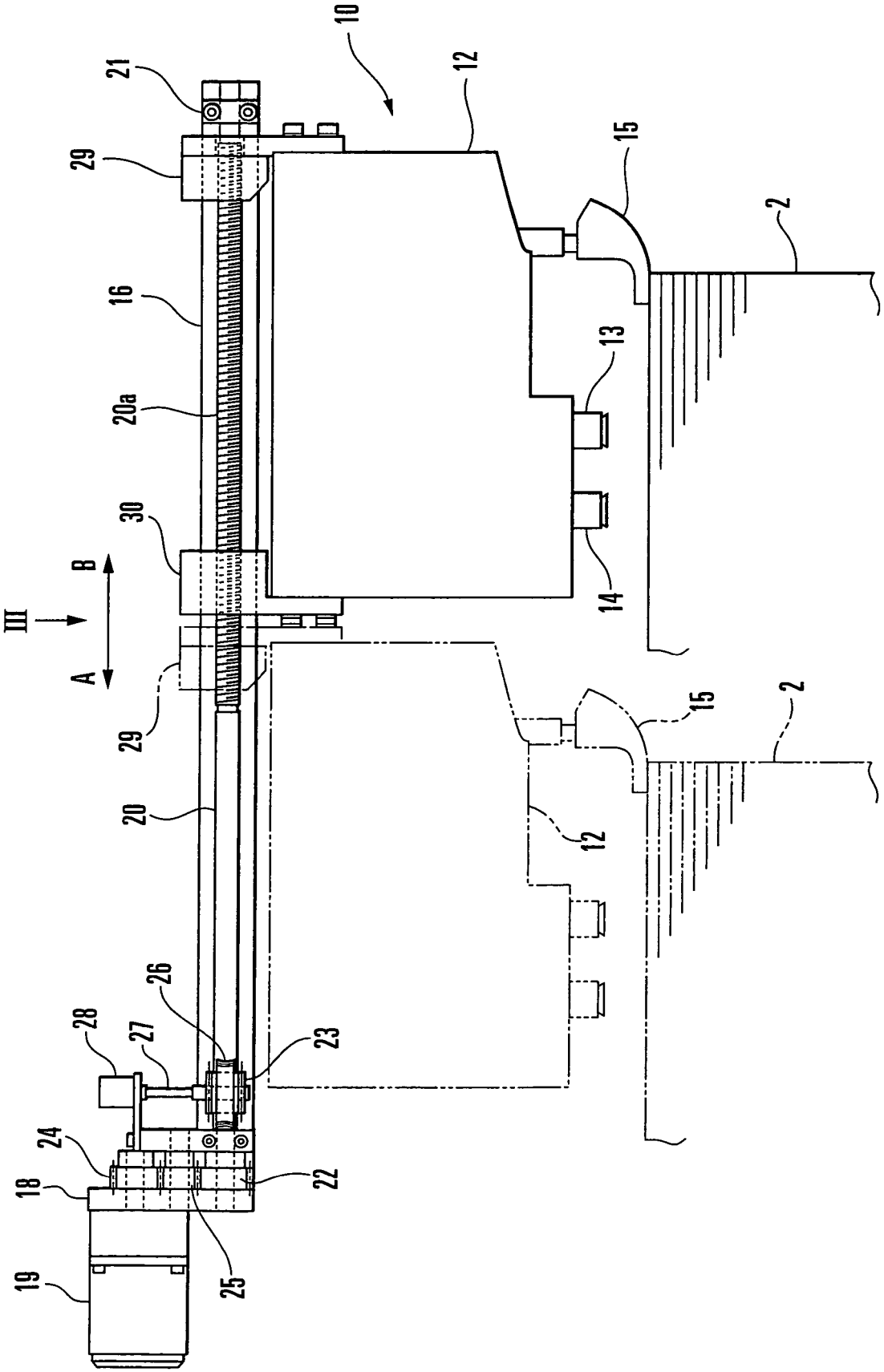
10
12
21
29
15
2
16
13
20a
30
B
III
A
14
29
15
2
20
12
26
28
27
23
24
18
22
19
25

FIG. 2

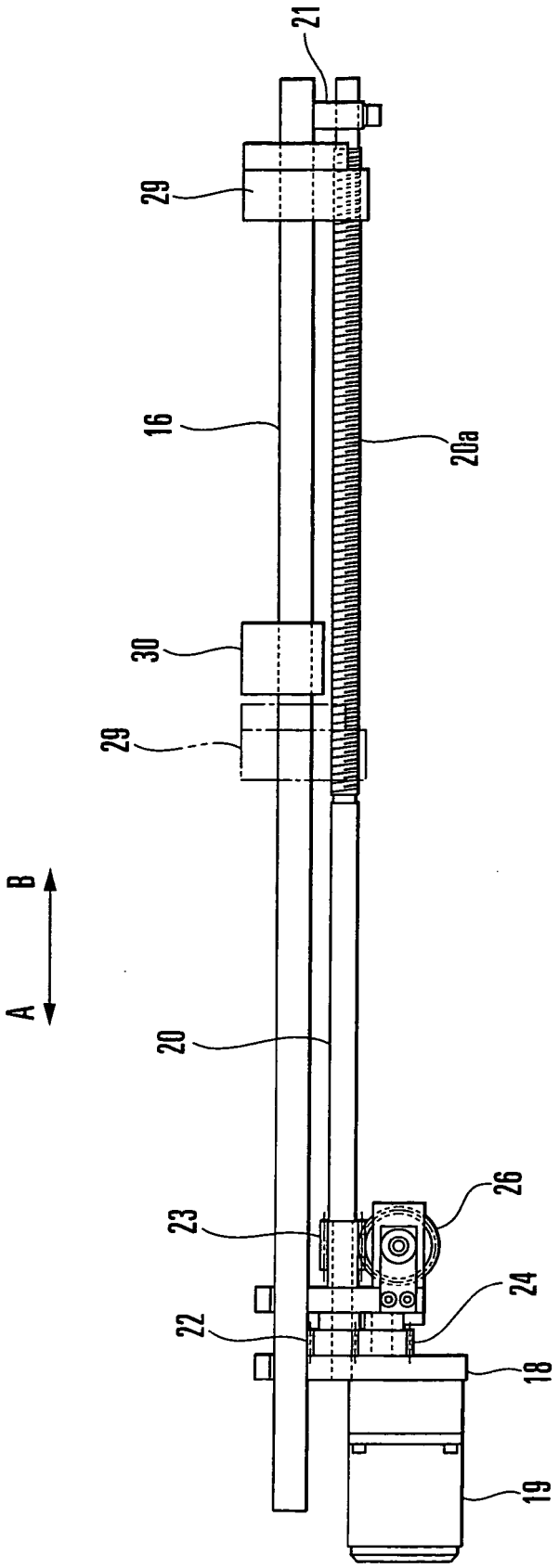

FIG. 3

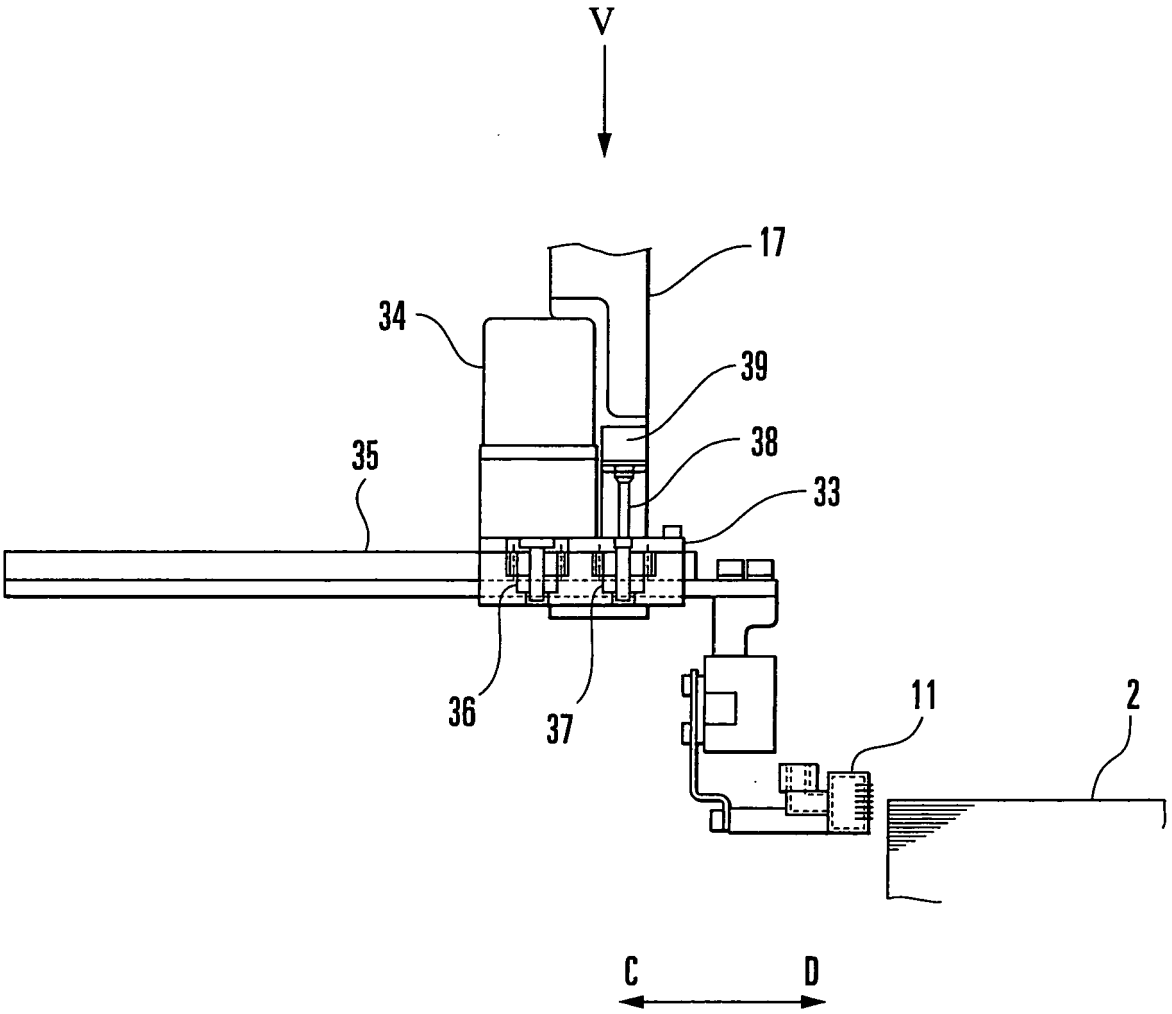

FIG. 4

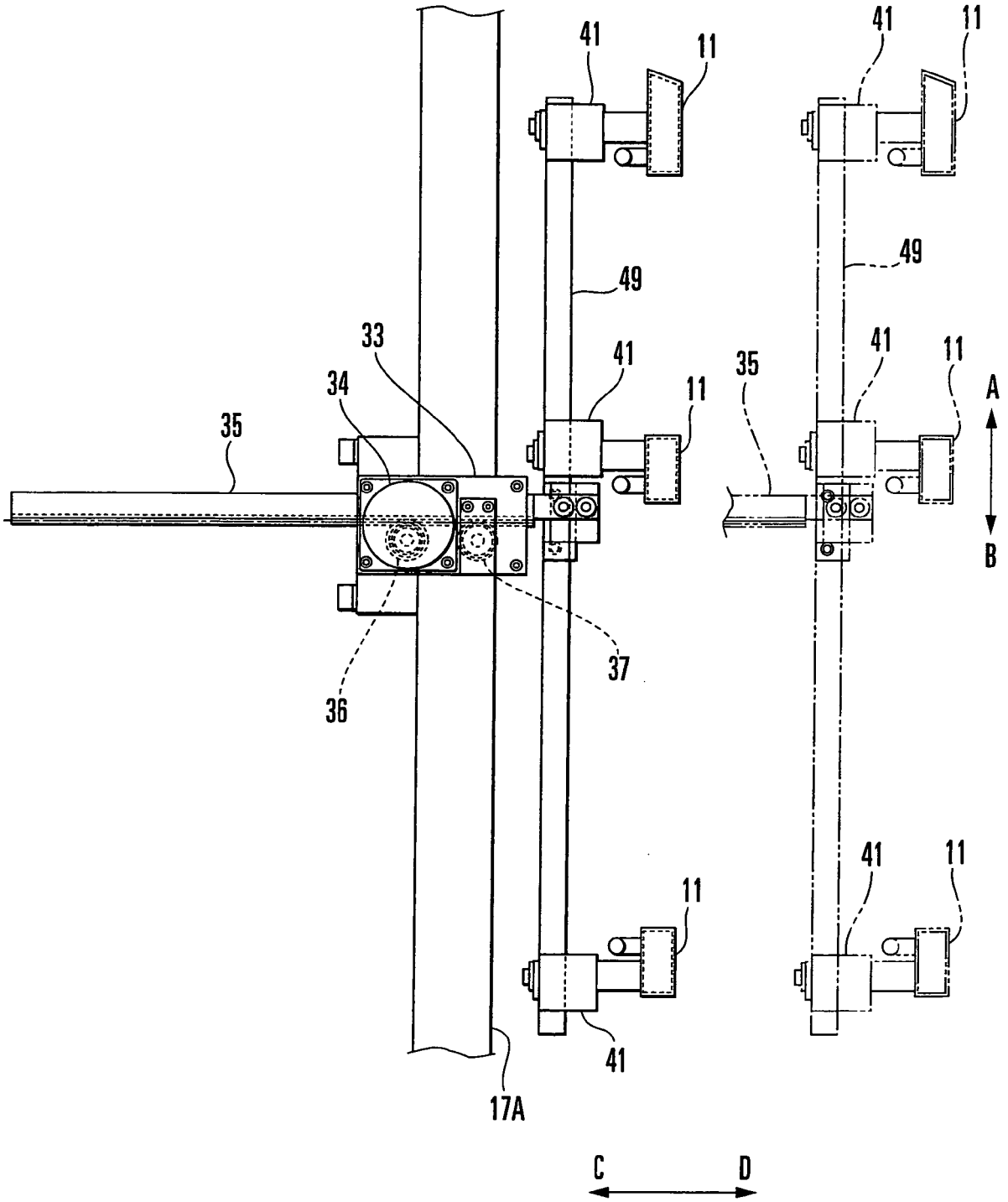

FIG. 5

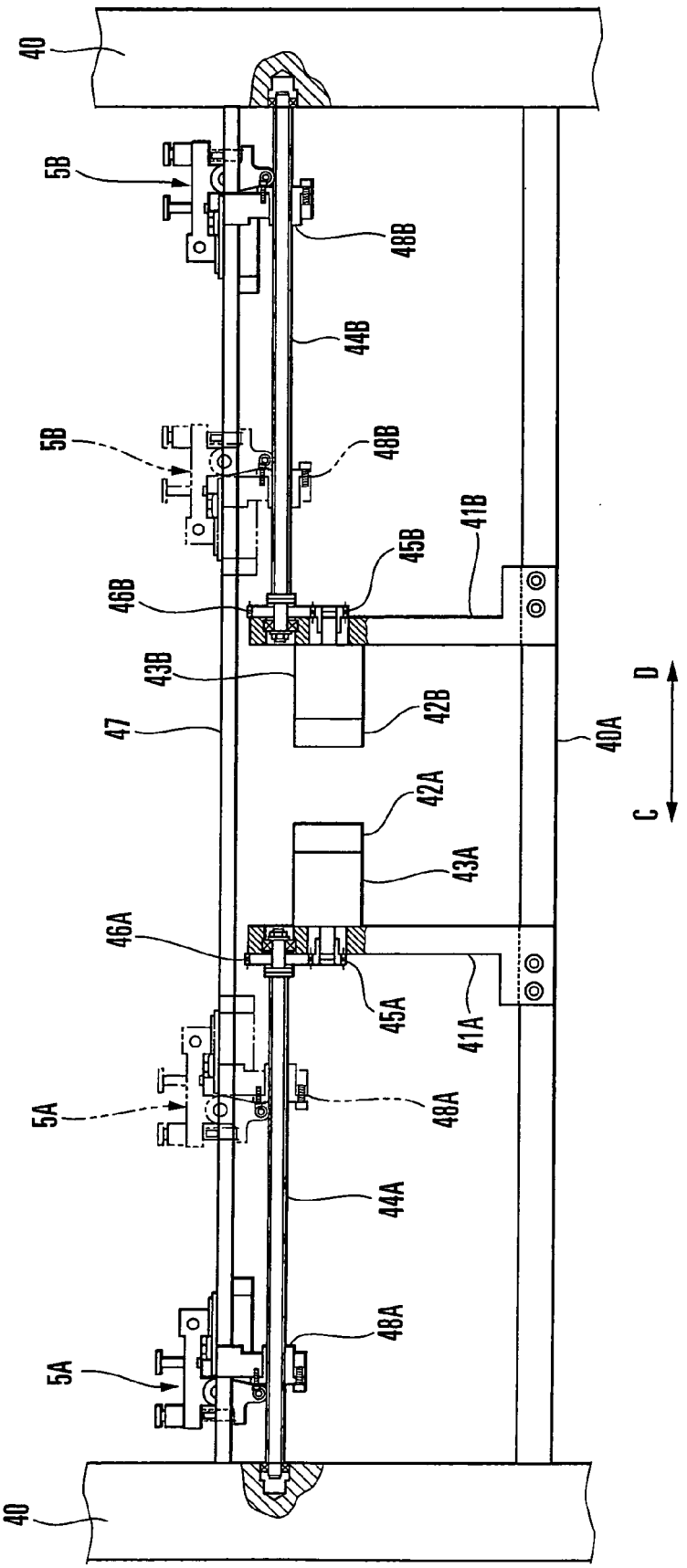
40
5B
48B
44B
5B
48B
41B
45B
46B
43B
42B
47
40A
D
C
42A
43A
46A
45A
41A
5A
48A
44A
48A
5A
40

FIG. 6

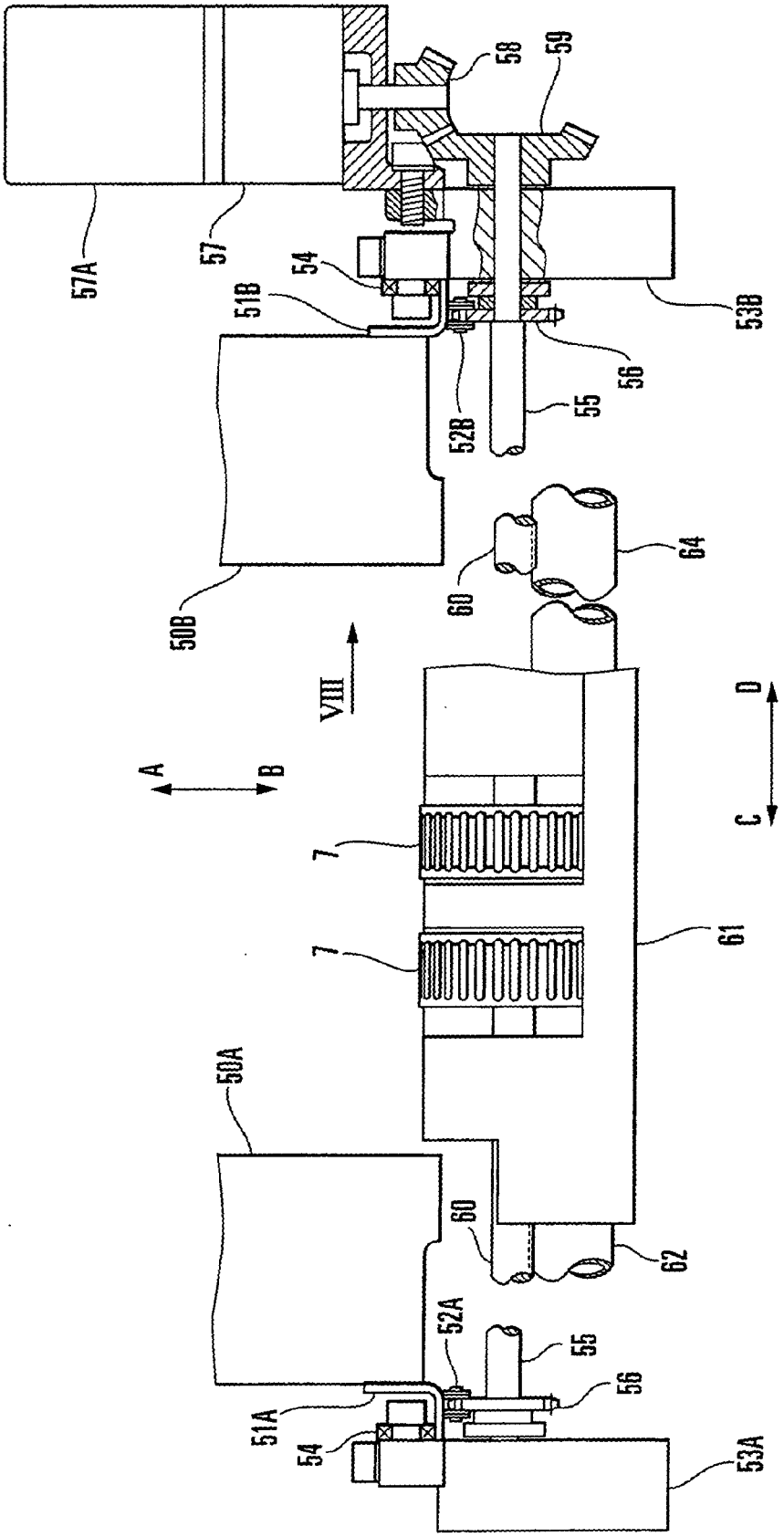
57A
57
58
59
54
51B
53B
56
52B
55
50B
60
64
VIII
A
B
C
D
7
7
61
50A
60
62
52A
55
56
51A
54
53A

FIG. 7

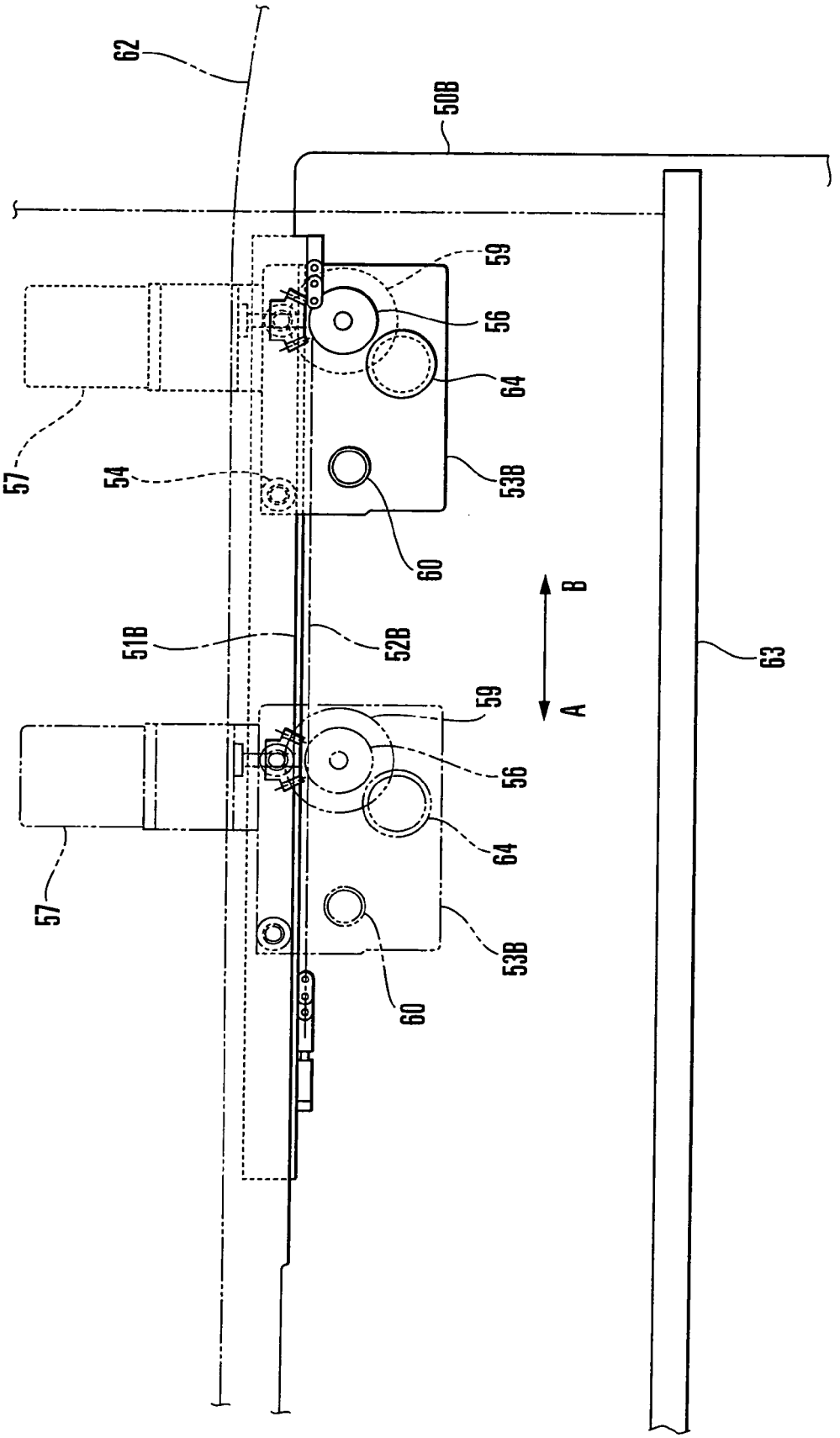

FIG. 8

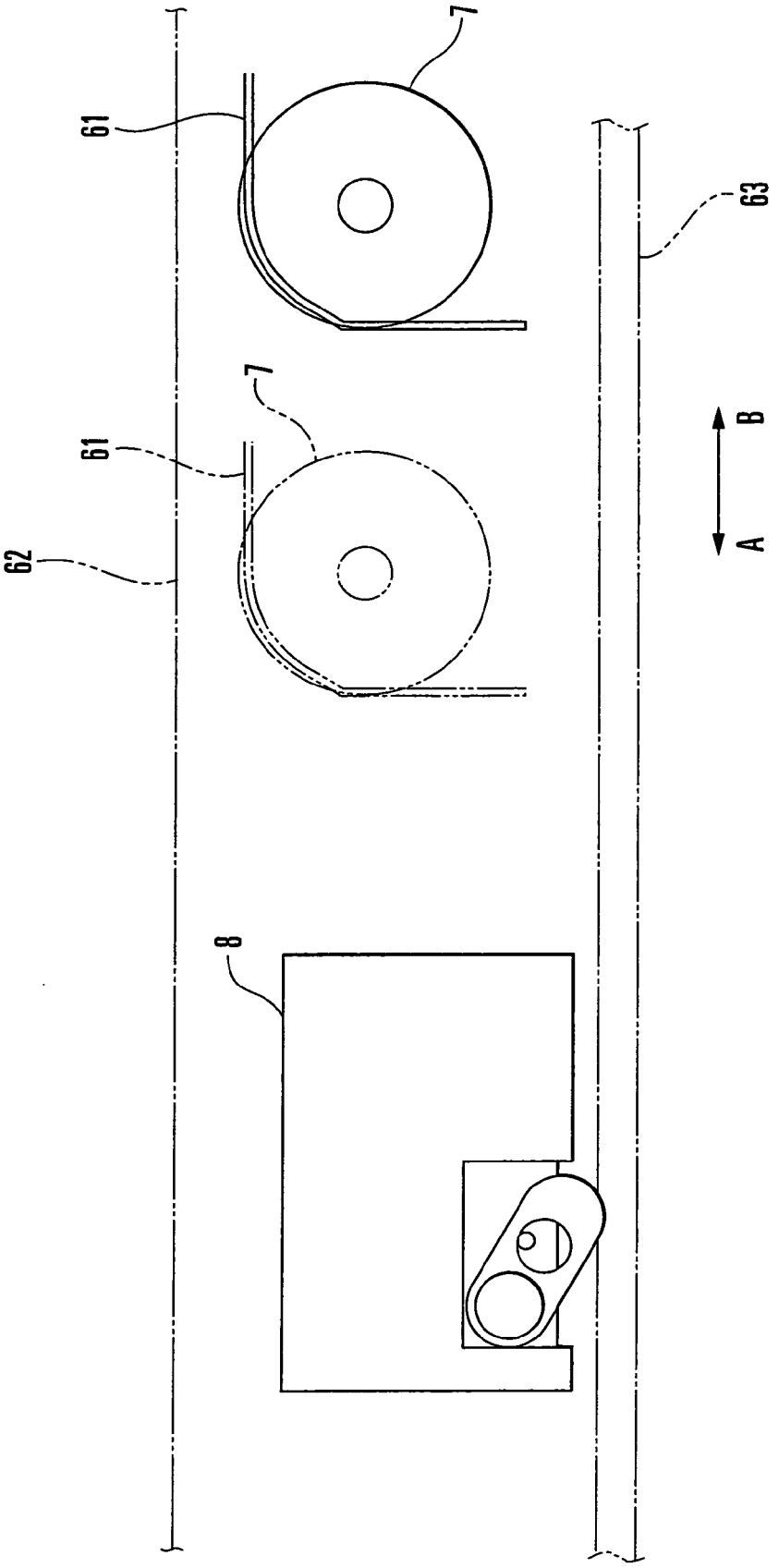

FIG. 9

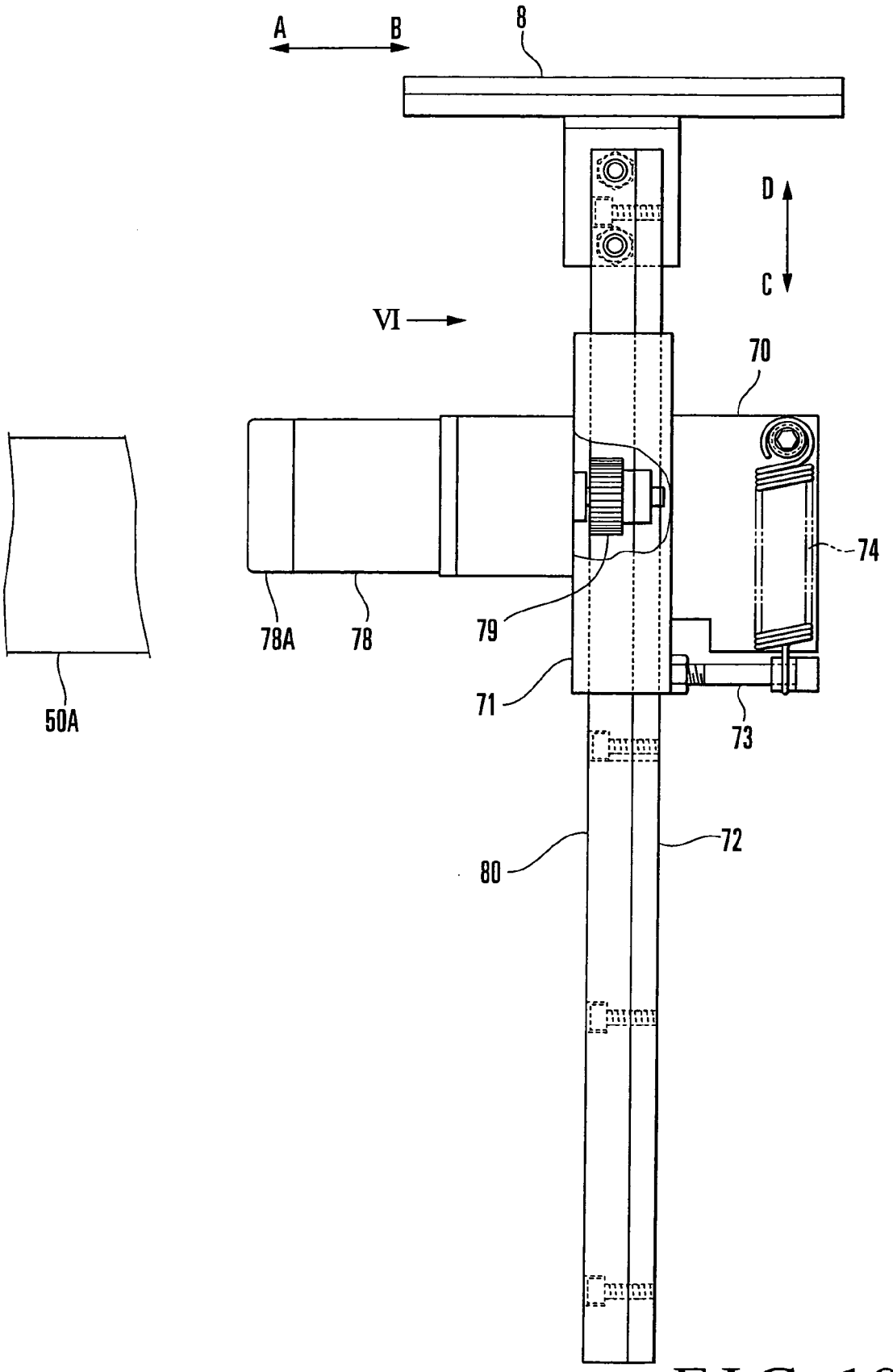

FIG. 10

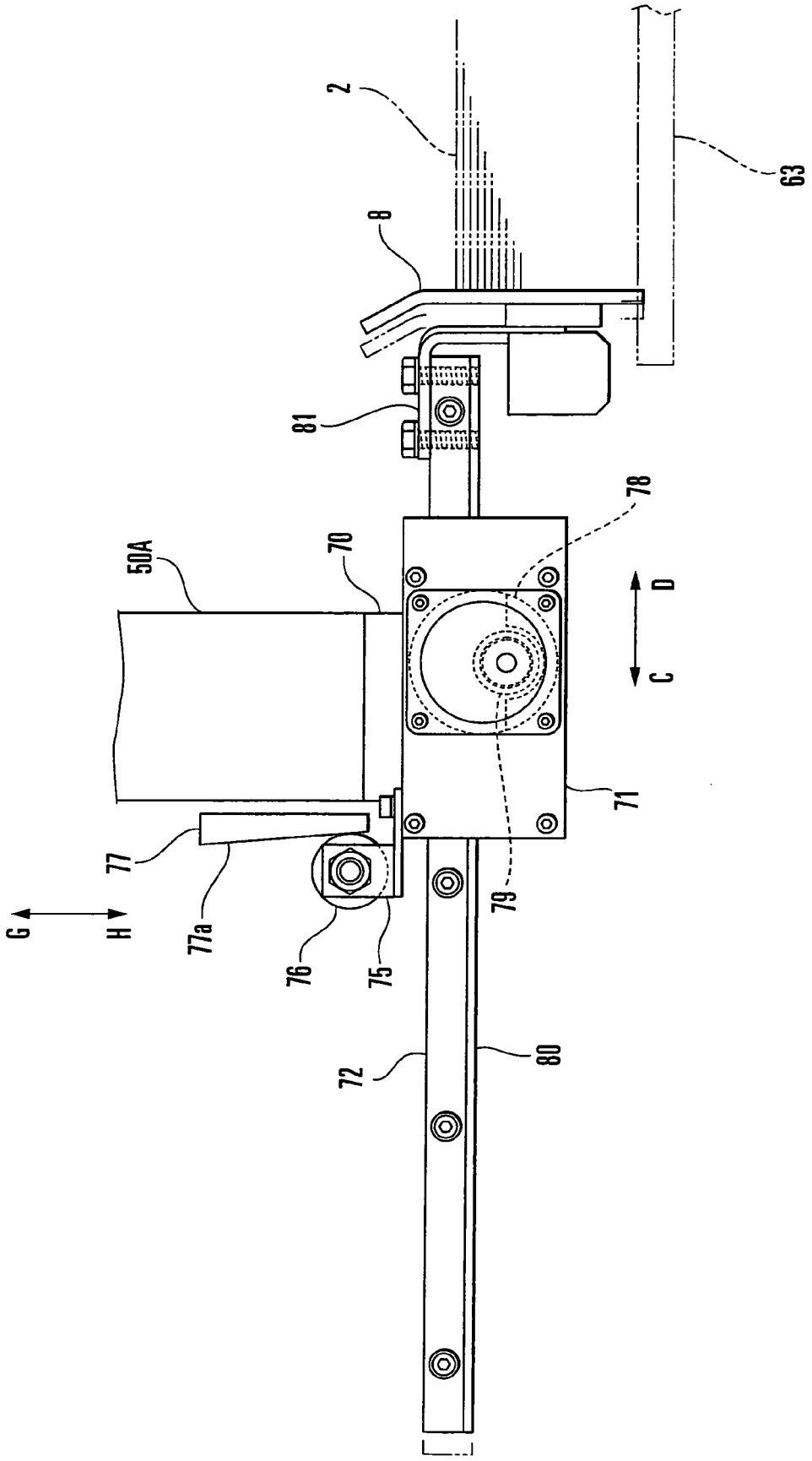

FIG. 11

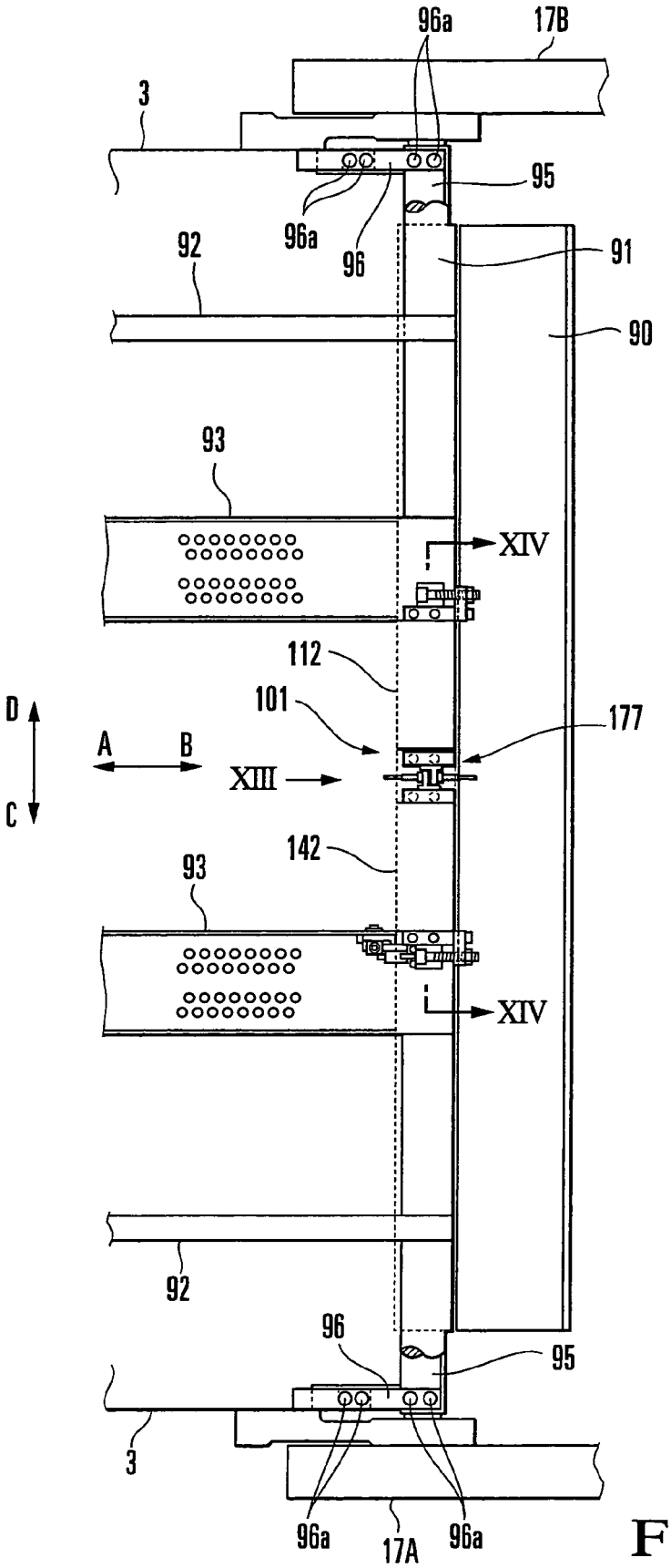
96a
17B
3
95
96a
96
92
91
90
93
XIV
112
101
177
D
A
B
XIII
C
142
93
XIV
92
96
95
3
96a
17A
96a

FIG. 12

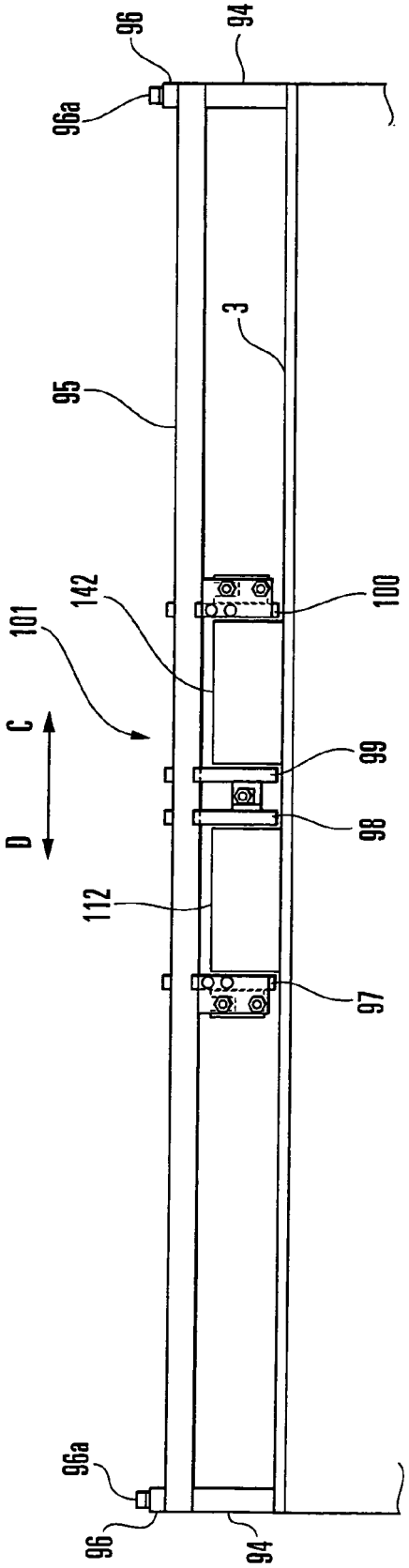

FIG. 13

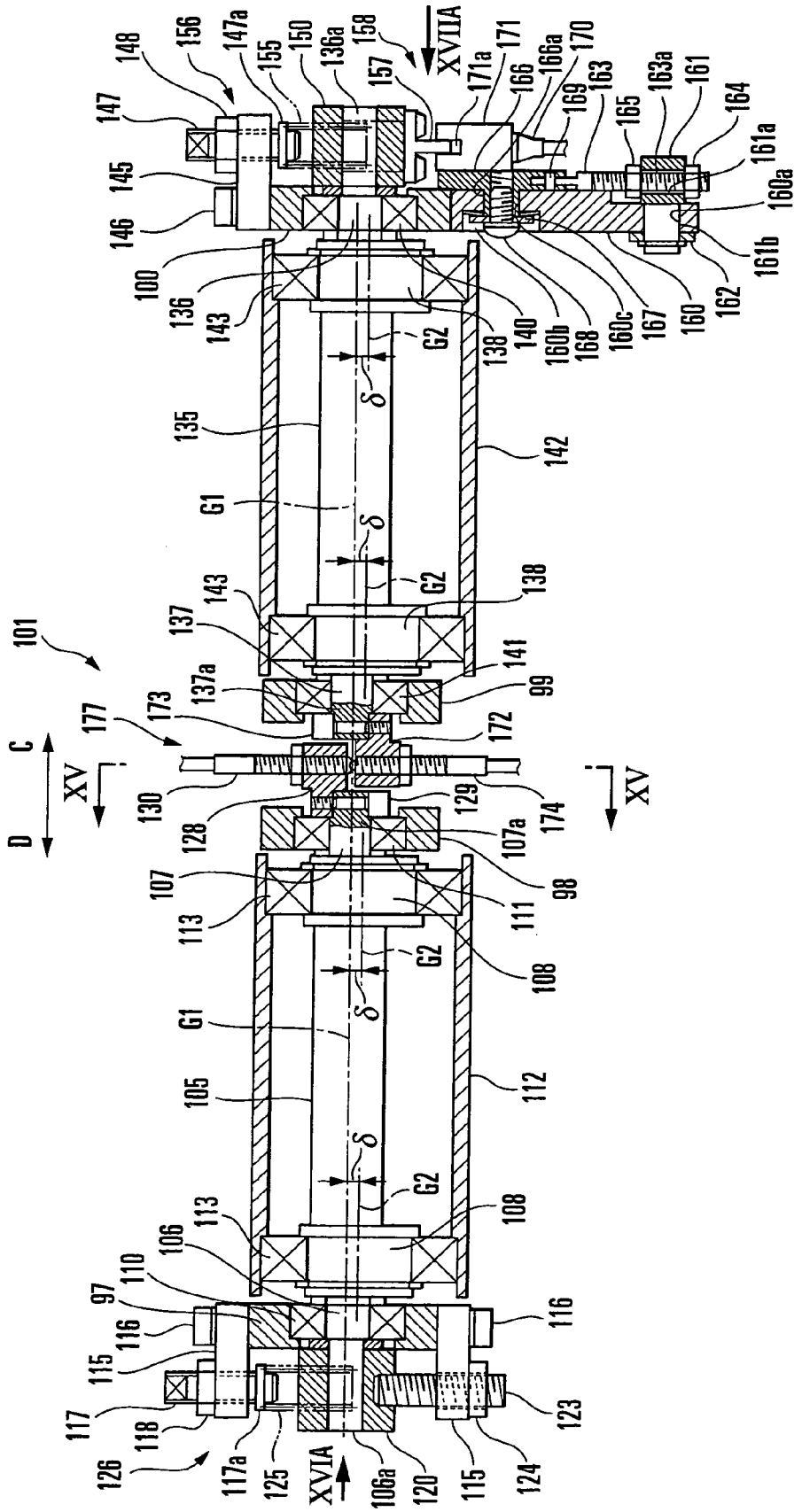

FIG. 14

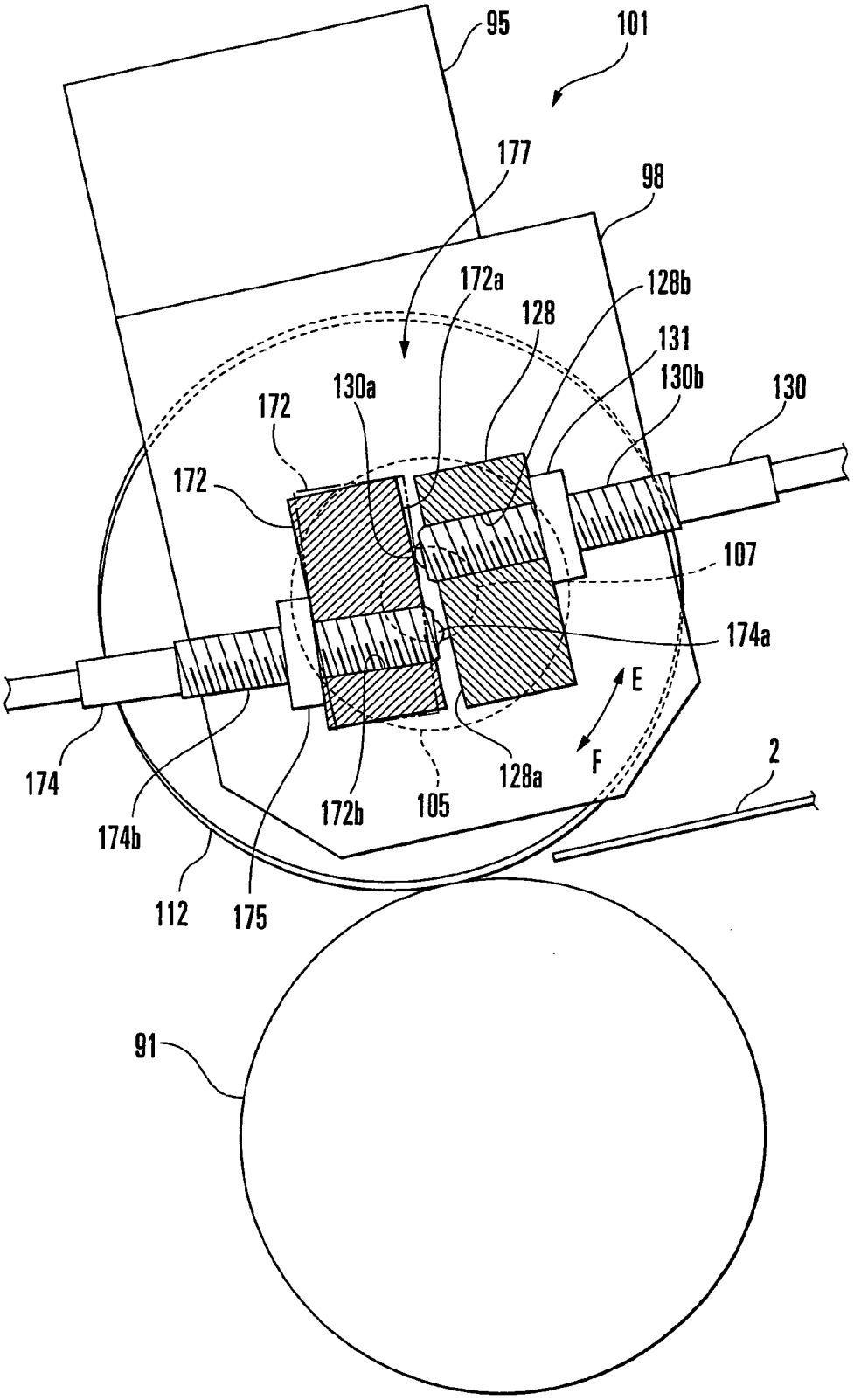
95
101
177
98
172a
128b
128
131
130b
130
130a
172
172
107
174a
E
F
174
174b
112
175
172b
105
128a
2
91

FIG. 15

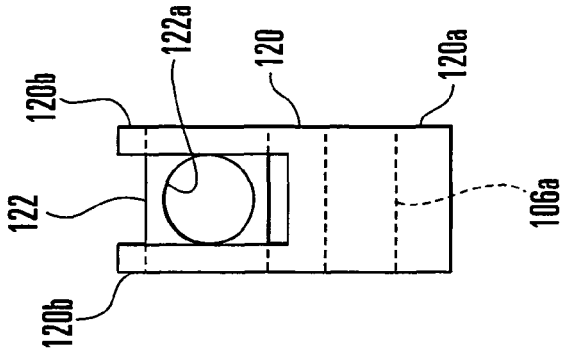

FIG.16B

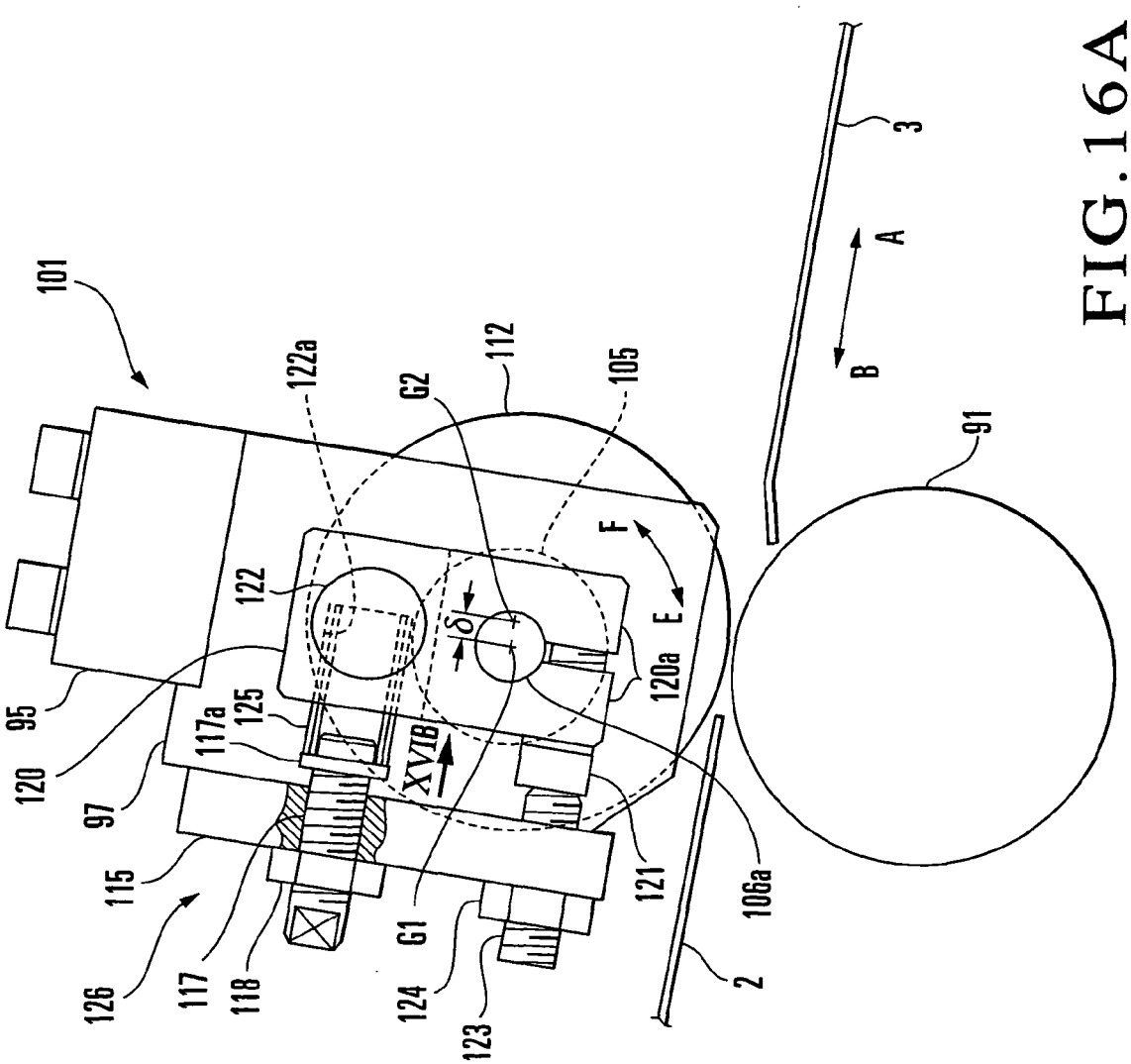

FIG.16A

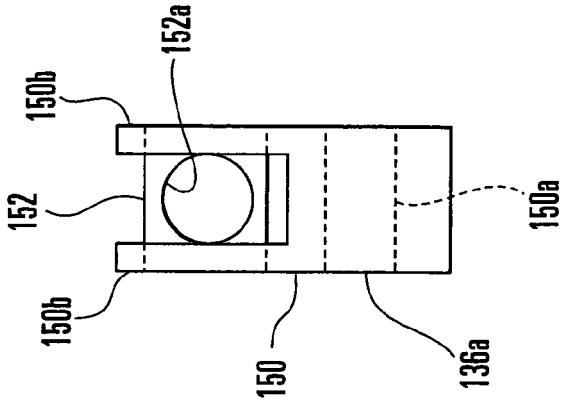

FIG.17B

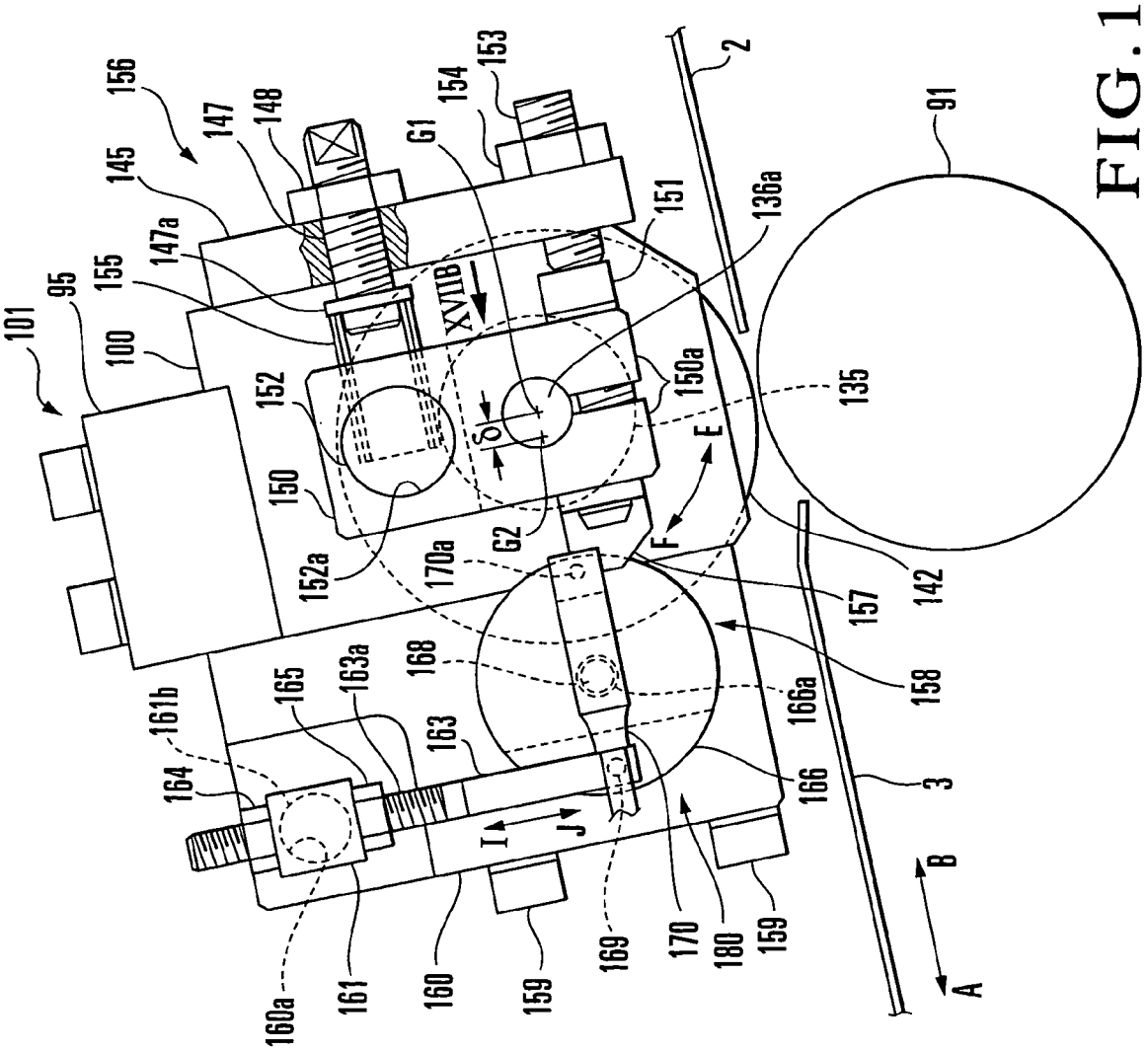

FIG.17A

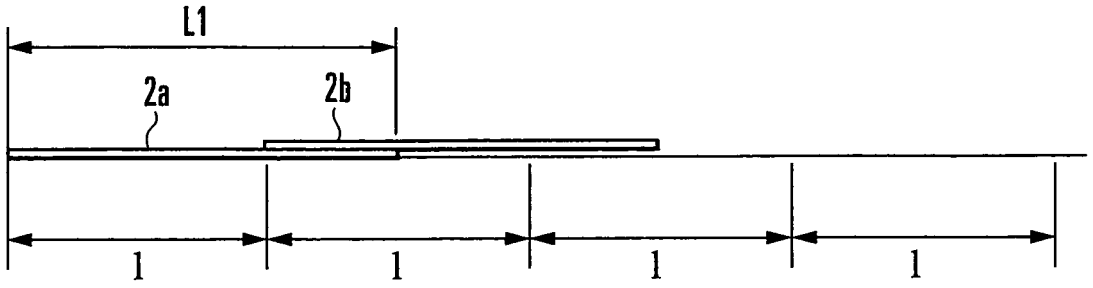

FIG.18A

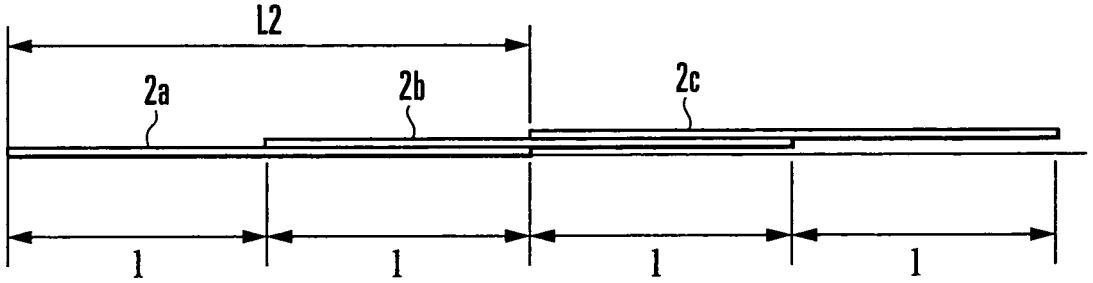

FIG.18B

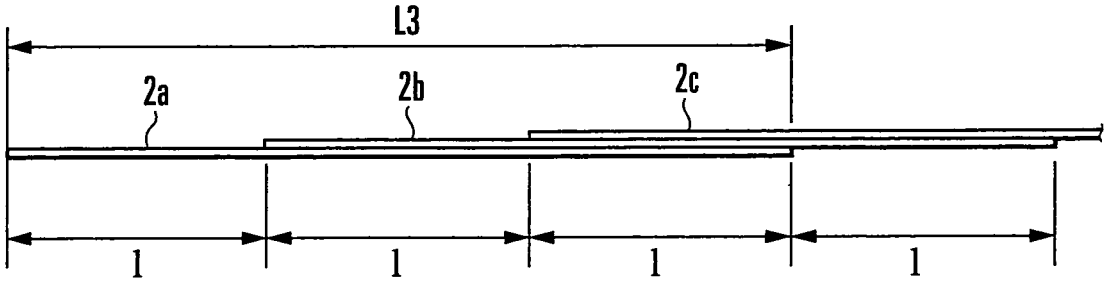

FIG.18C

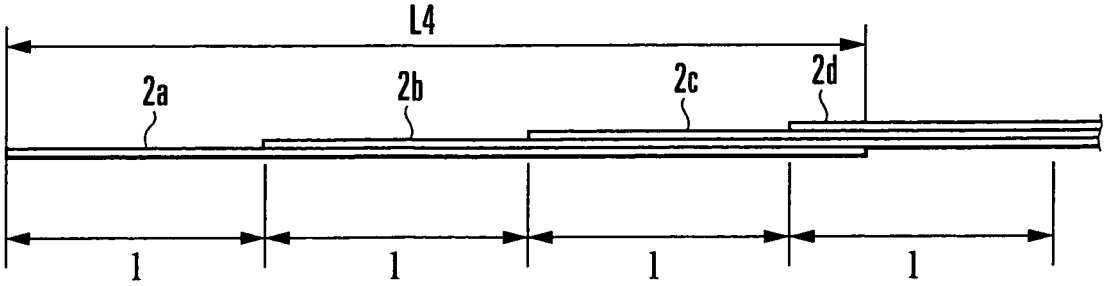

FIG.18D

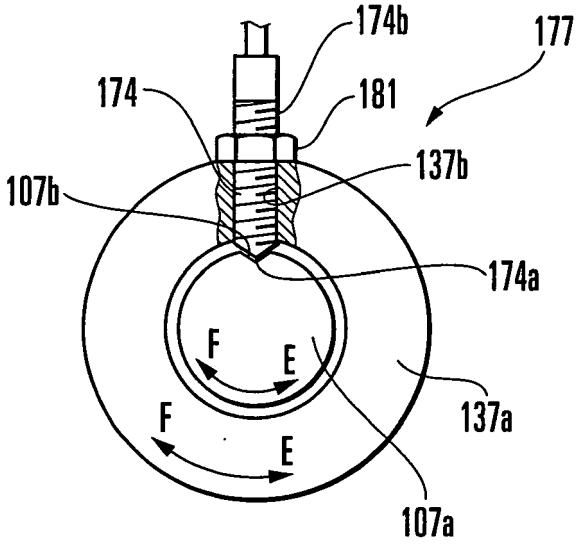
174b
177
174
181
137b
107b
174a
F
E
137a
F
E
107a

FIG. 19

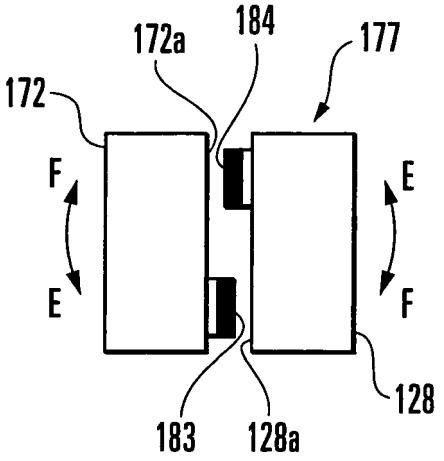
172a
184
177
172
F
E
E
F
128
183
128a

FIG. 20

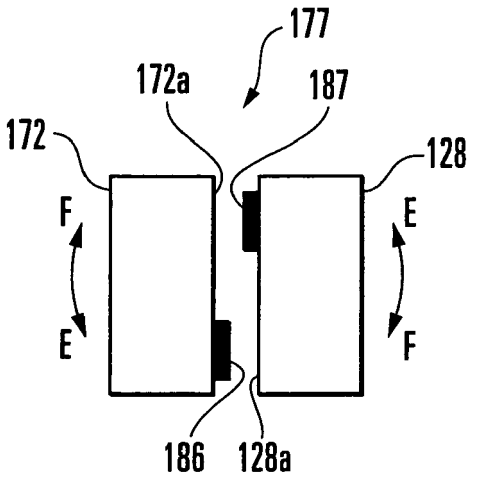
177
172a
187
172
128
F
E
E
F
186
128a

FIG. 21

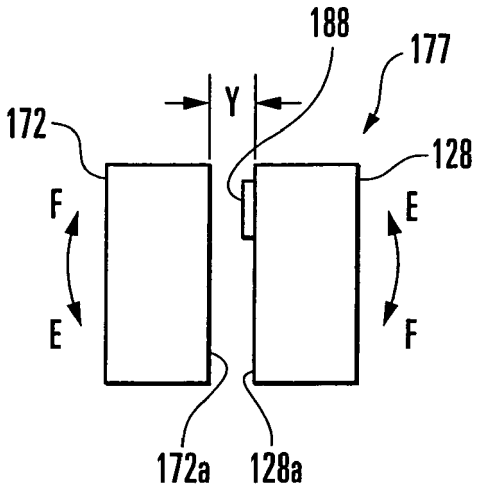
188
177
Y
172
128
F
E
E
F
172a
128a

FIG. 22

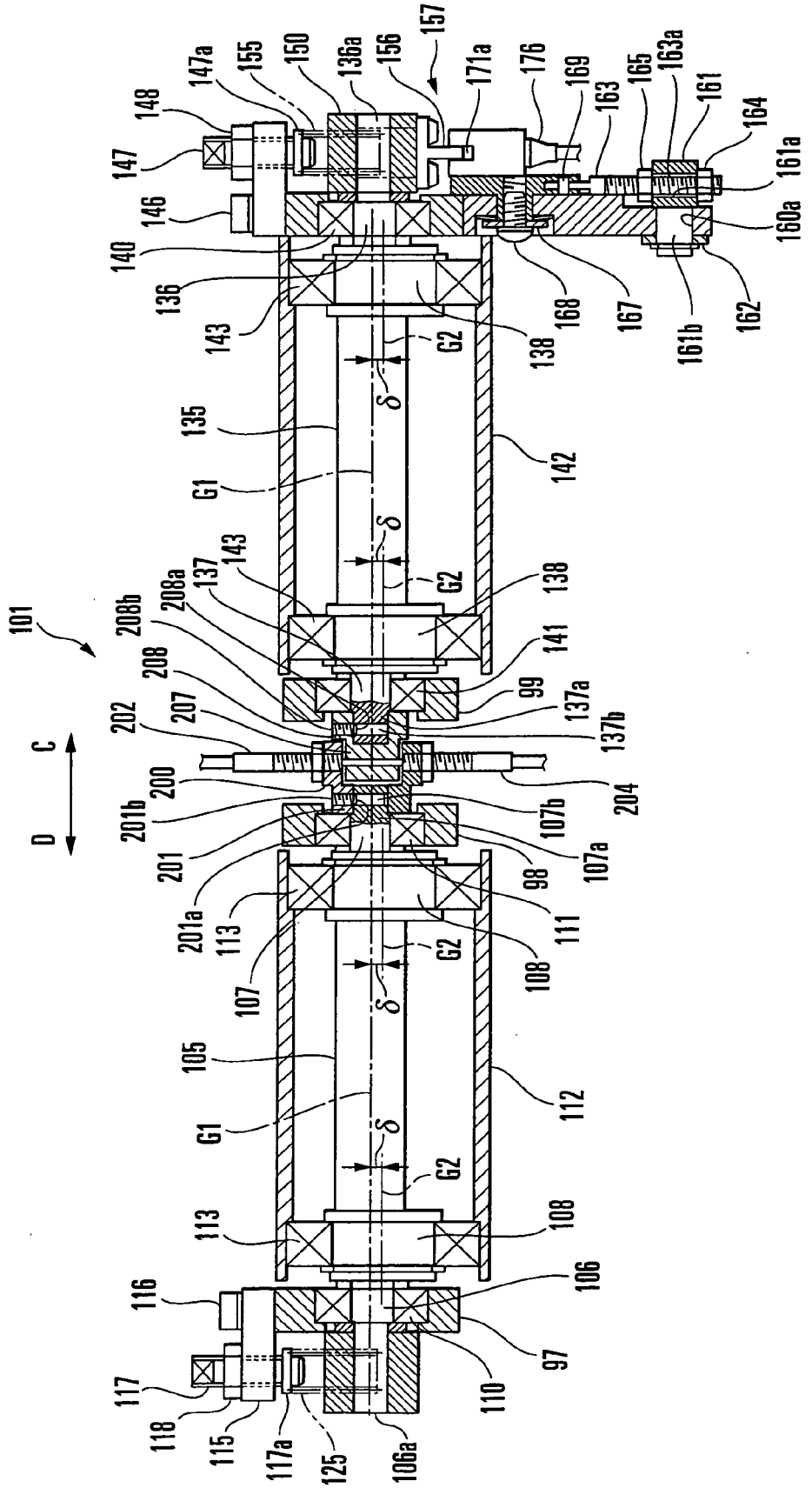
101
148
147
146
140
136
143
147a
155
150
136a
156
157
171a
176
169
163
165
163a
161
164
161a
160a
162
161b
168
167
138
G2
δ
135
G1
142
137
208a
208b
208
207
202
200
201b
201
201a
113
107
105
116
117
118
115
117a
125
106a
110
97
106
108
112
111
98
107a
107b
204
137a
137b
99
141
D
C

FIG. 23

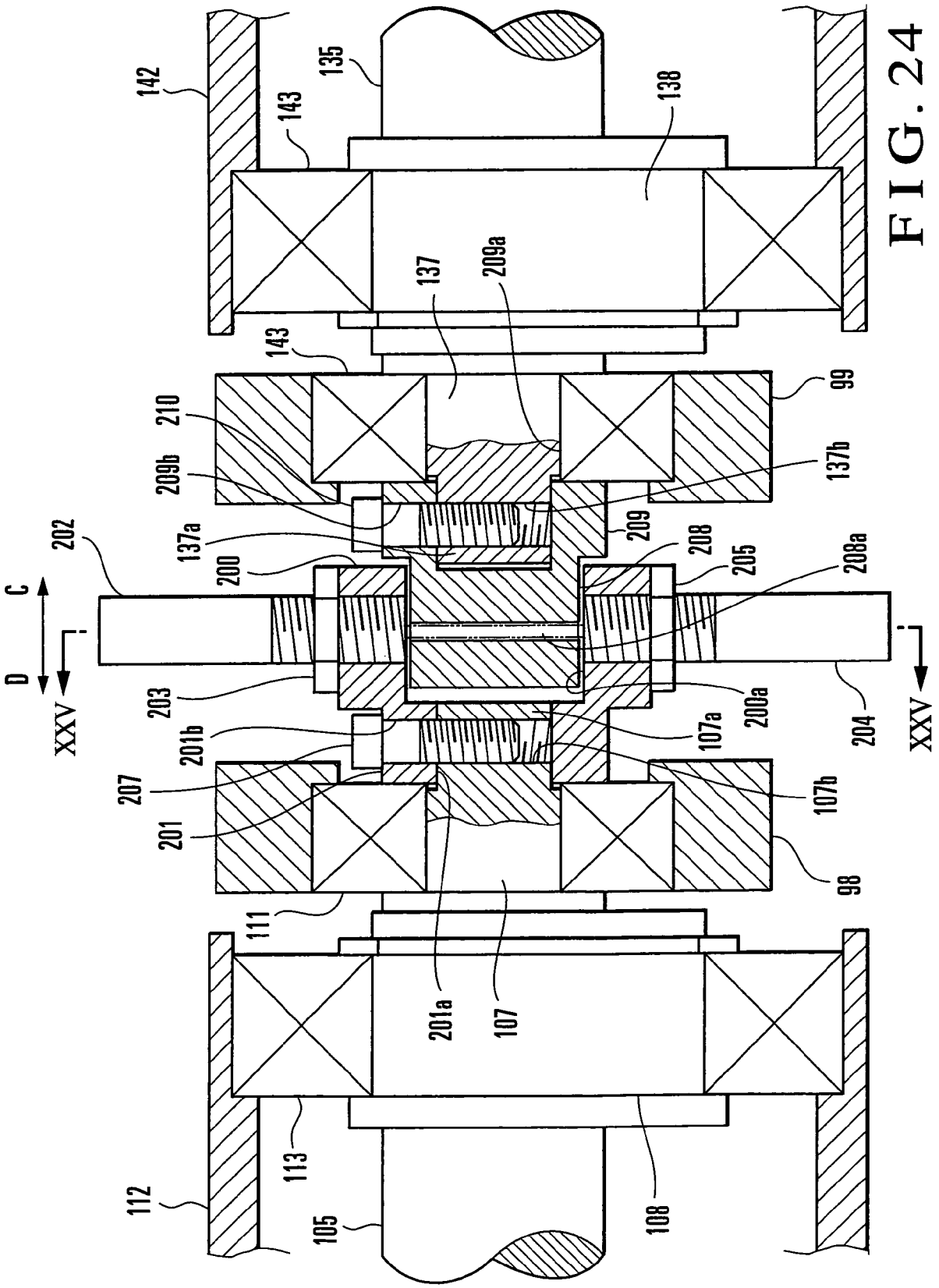
142
143
135
138
137
209a
143
210
99
209b
137b
137a
209
202
200
208
205
208a
C
D
XXV
203
200a
204
XXV
201b
107a
207
107b
201
98
111
201a
107
113
112
105
108

FIG. 24

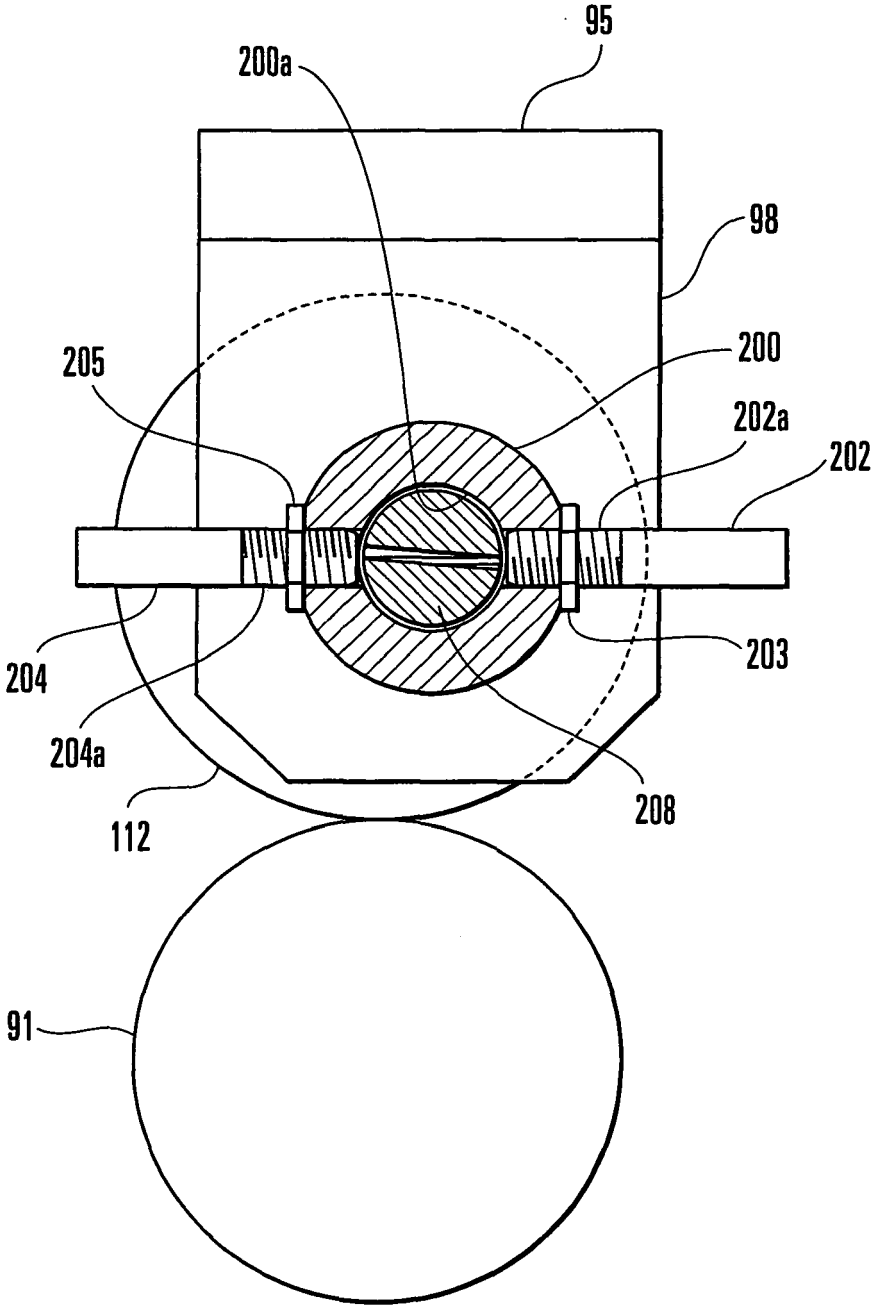

FIG. 25

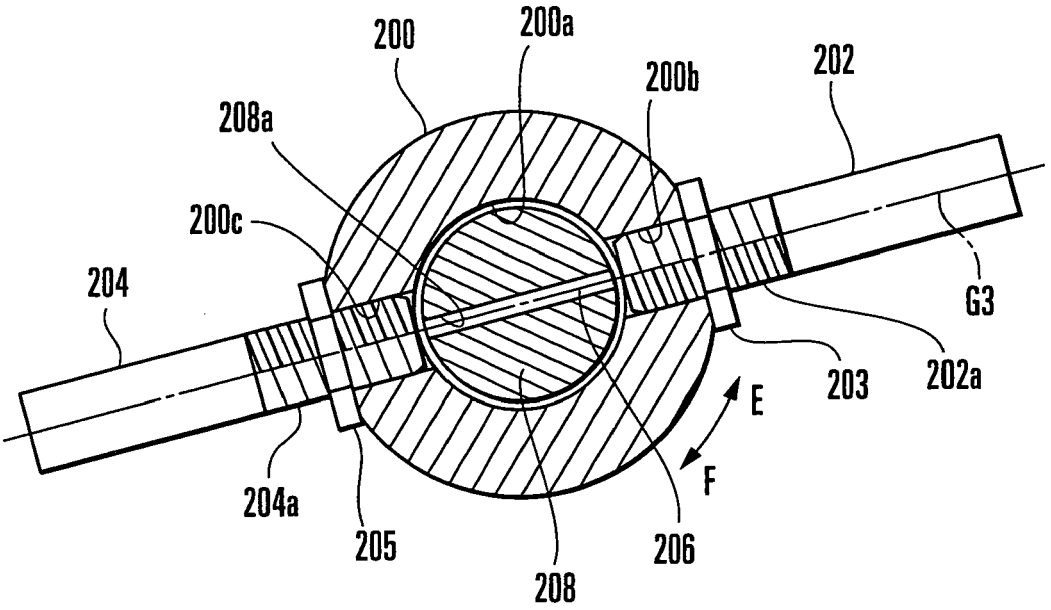
200
200a
200b
202
208a
200c
204
G3
203
202a
E
F
204a
205
206
208

FIG. 26

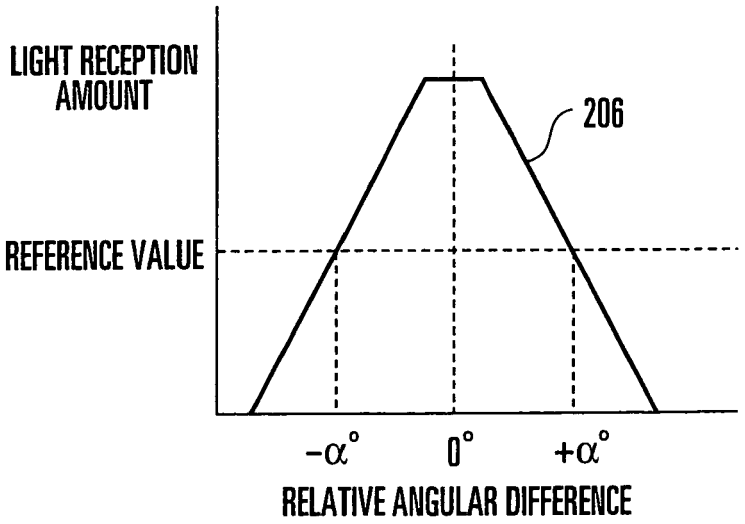
LIGHT RECEPTION AMOUNT
206
REFERENCE VALUE
−α°
0°
+α°
RELATIVE ANGULAR DIFFERENCE

FIG. 27

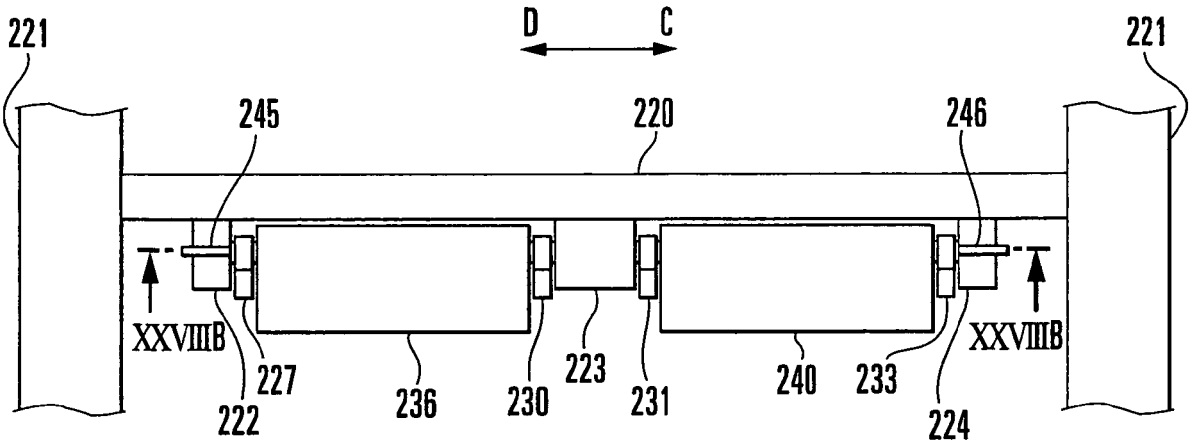

FIG.28A

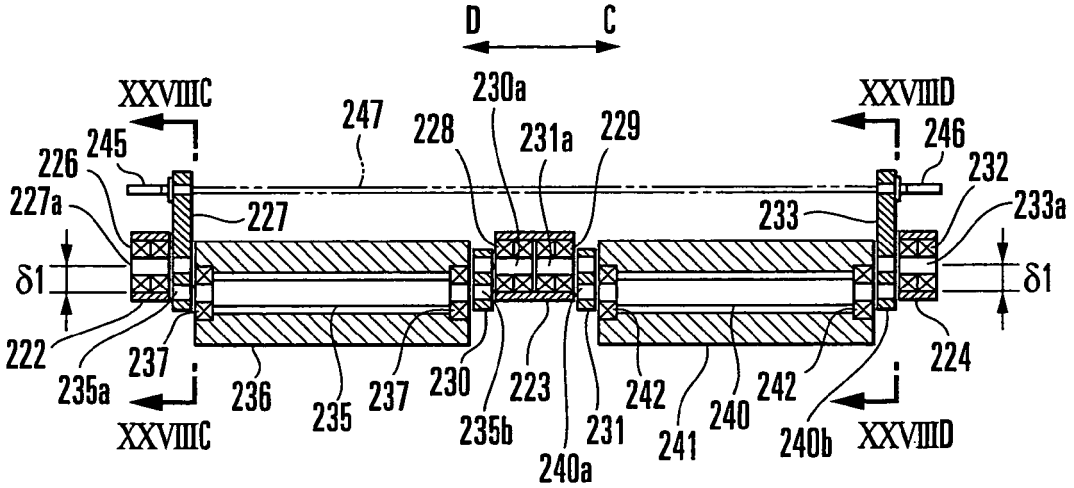

FIG.28B

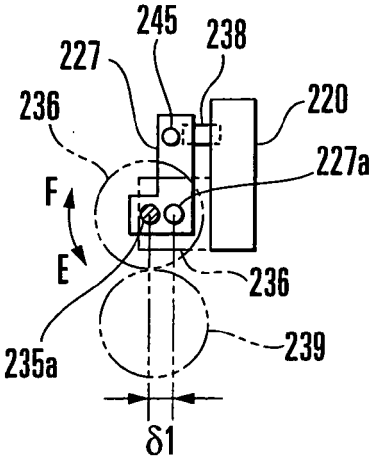

FIG.28C

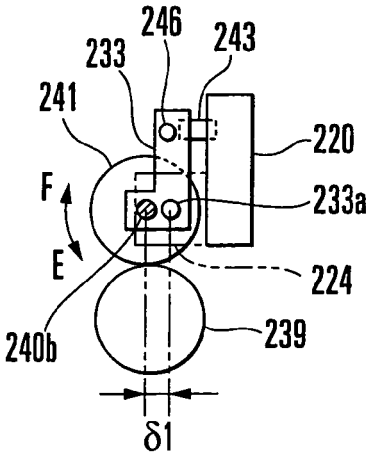

FIG.28D

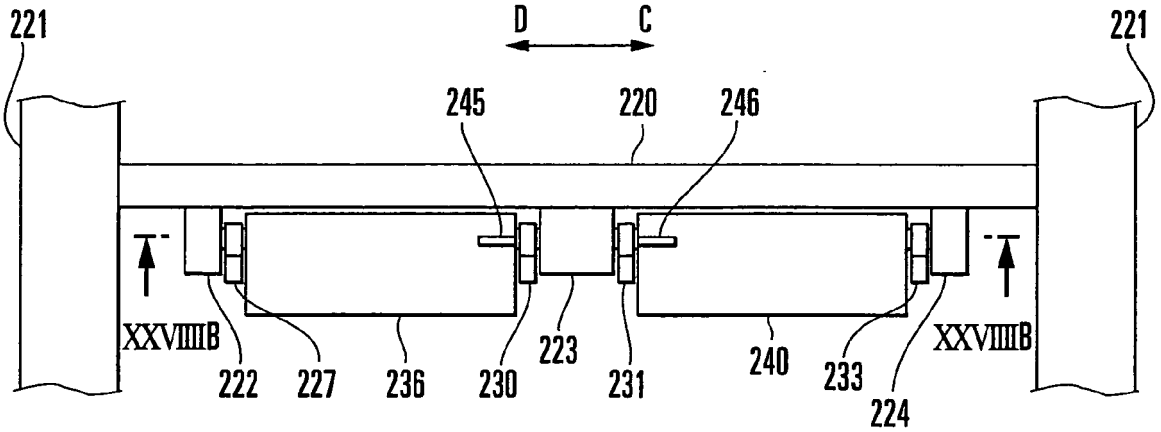

FIG.29A

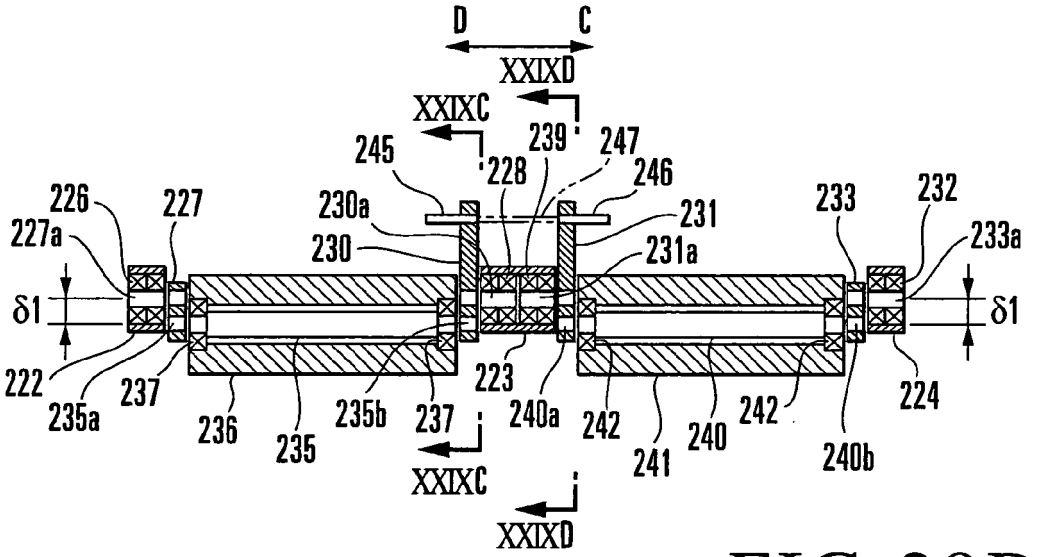

FIG.29B

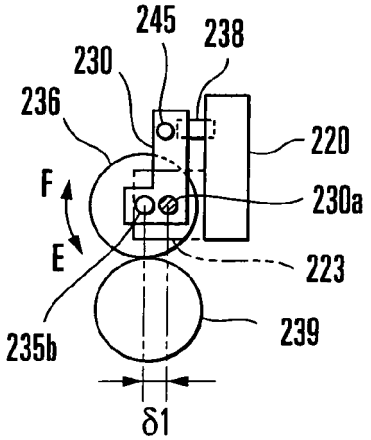

FIG.29C

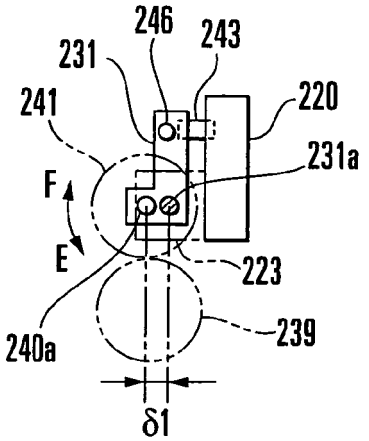

FIG.29D

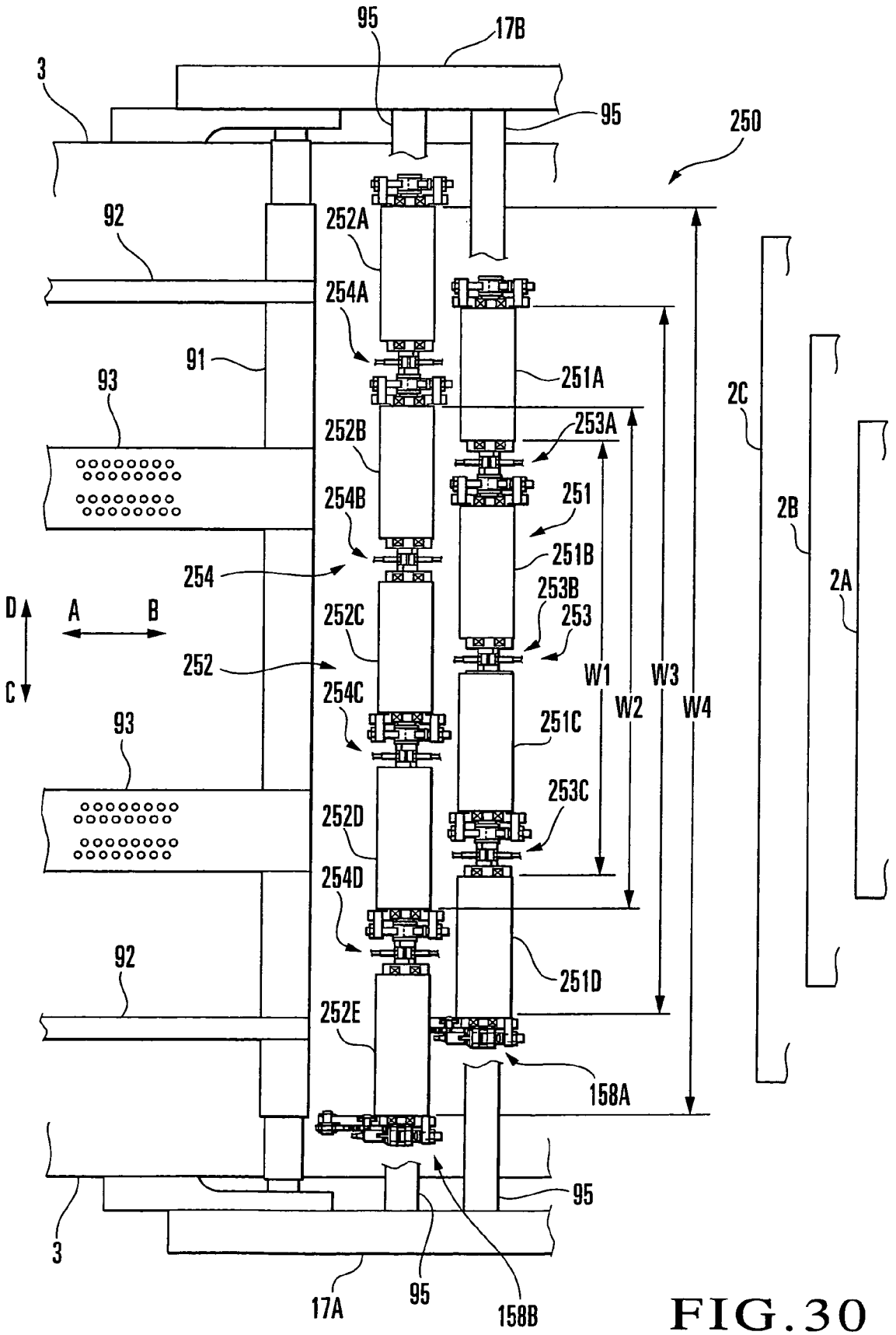
95
17B
3
95
250
92
252A
254A
91
251A
93
253A
2C
252B
254B
251
2B
251B
254
253B
2A
D
A
B
252C
253
C
252
W1
W3
254C
W2
W4
251C
93
253C
252D
254D
92
251D
252E
158A
95
3
17A
95
158B

FIG.30

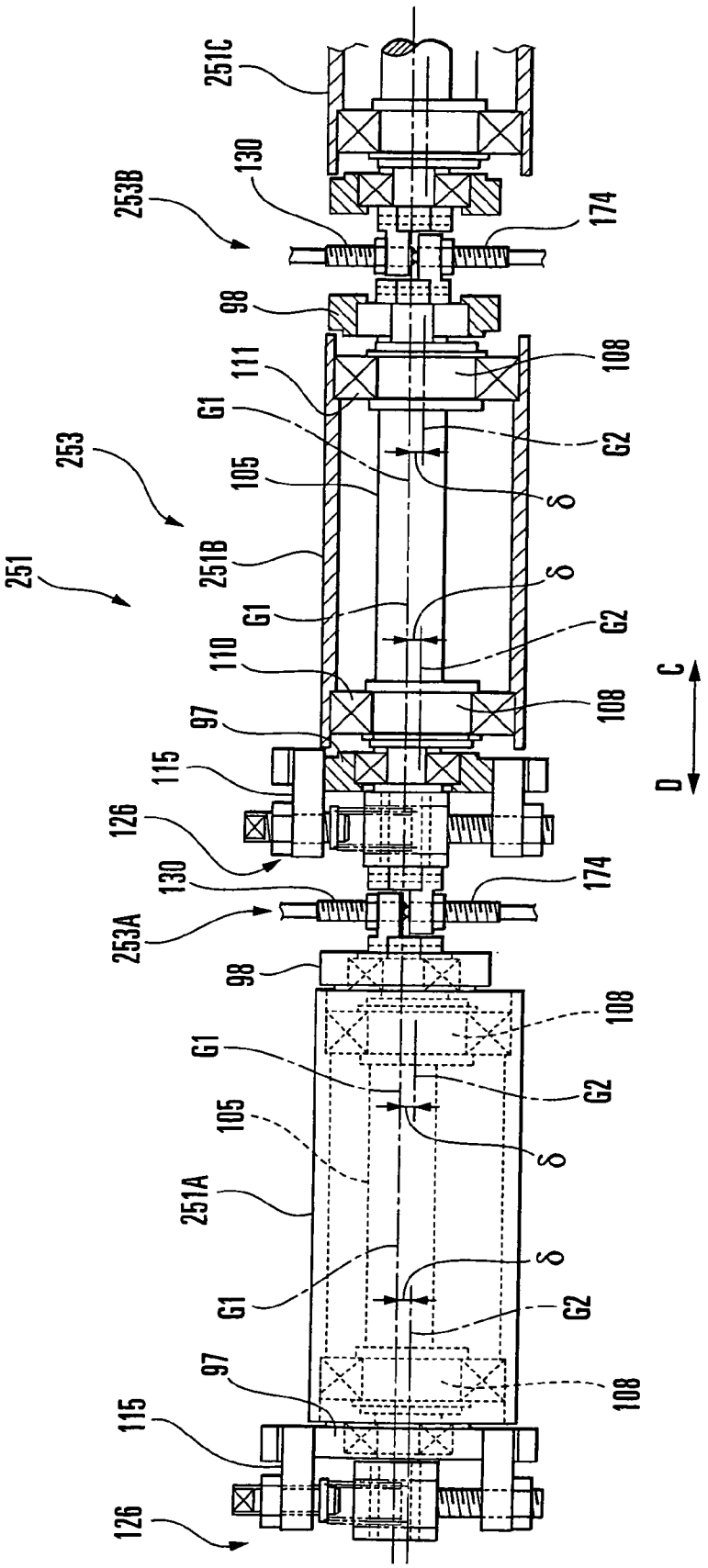
251C
130
253B
174
98
108
111
G1
G2
253
105
δ
251
251B
δ
G1
G2
110
C
108
97
D
115
126
130
174
253A
98
108
G1
G2
105
δ
251A
δ
G1
G2
97
108
115
126

FIG.31A

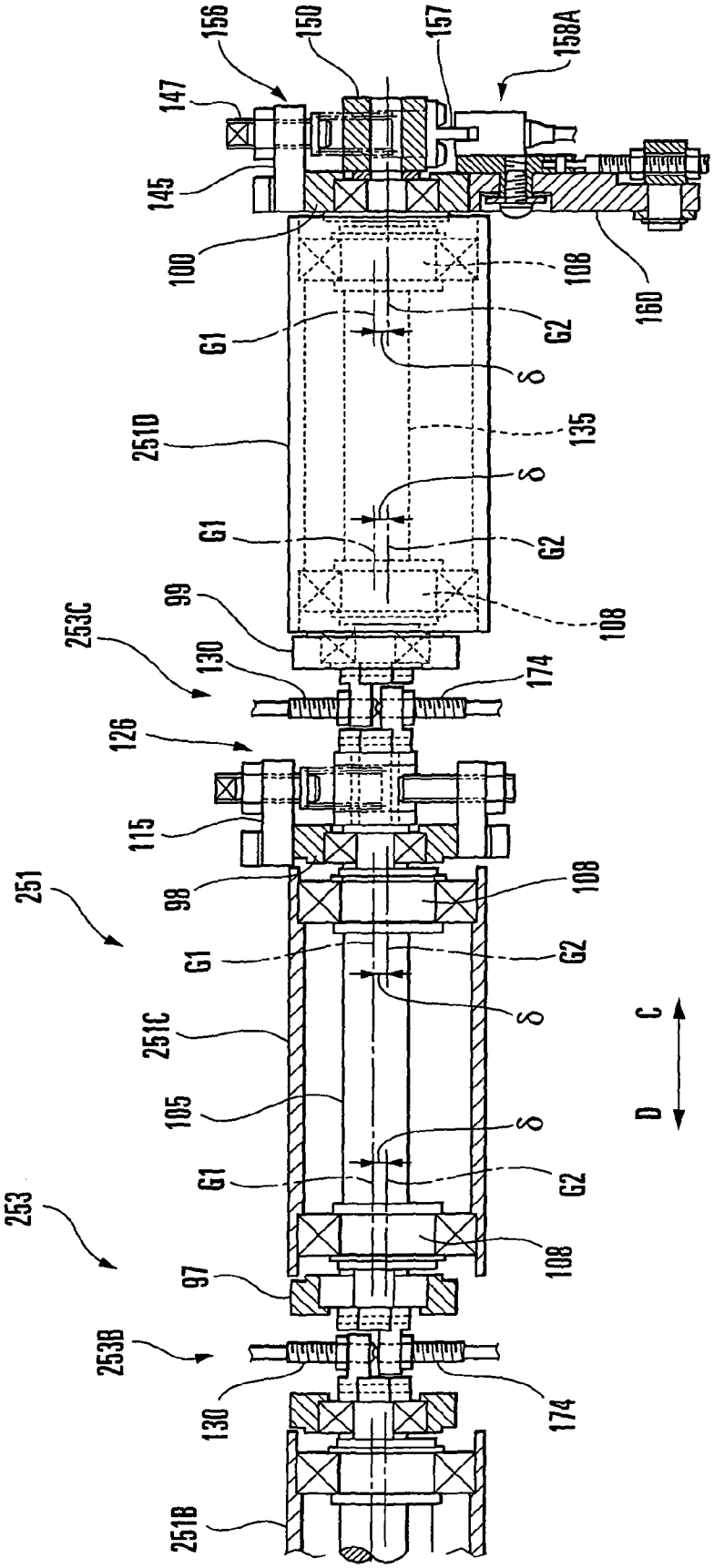
156
150
157
158A
147
145
100
108
160
G1
G2
δ
251D
135
δ
G1
G2
108
99
253C
130
174
126
115
98
108
251
G1
G2
δ
251C
105
δ
G1
G2
253
108
97
253B
130
174
251B
C
D

FIG.31B

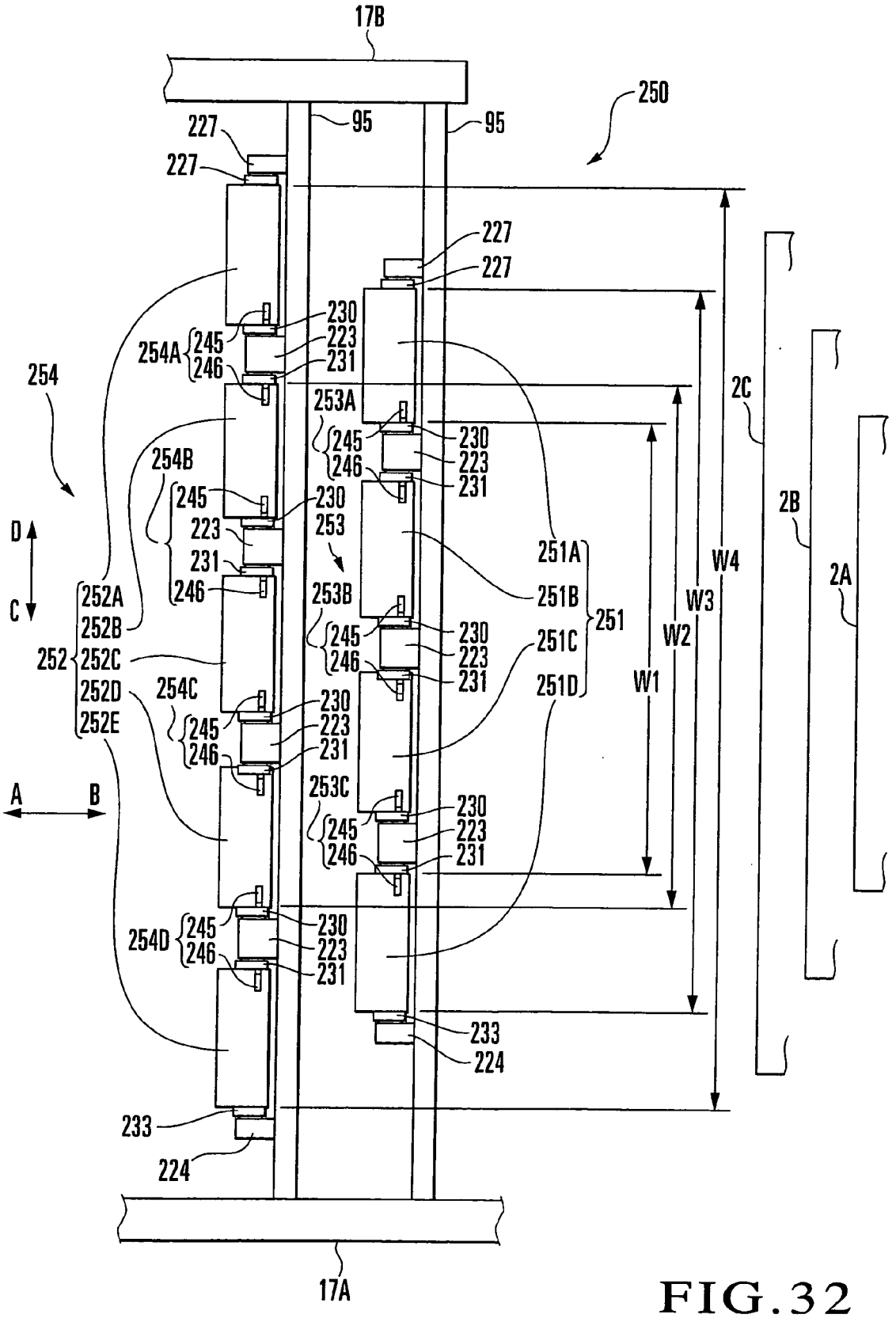
17B
250
227
95
95
227
227
227
230
223
231
254A
245
246
254
253A
245
246
230
223
231
254B
245
223
231
246
230
253
D
C
252A
252B
252
252C
252D
252E
253B
245
246
230
223
231
251A
251B
251
251C
251D
254C
245
246
230
223
231
A
B
253C
245
246
230
223
231
254D
245
246
230
223
231
233
224
233
224
17A
W1
W2
W3
W4
2C
2B
2A

FIG.32

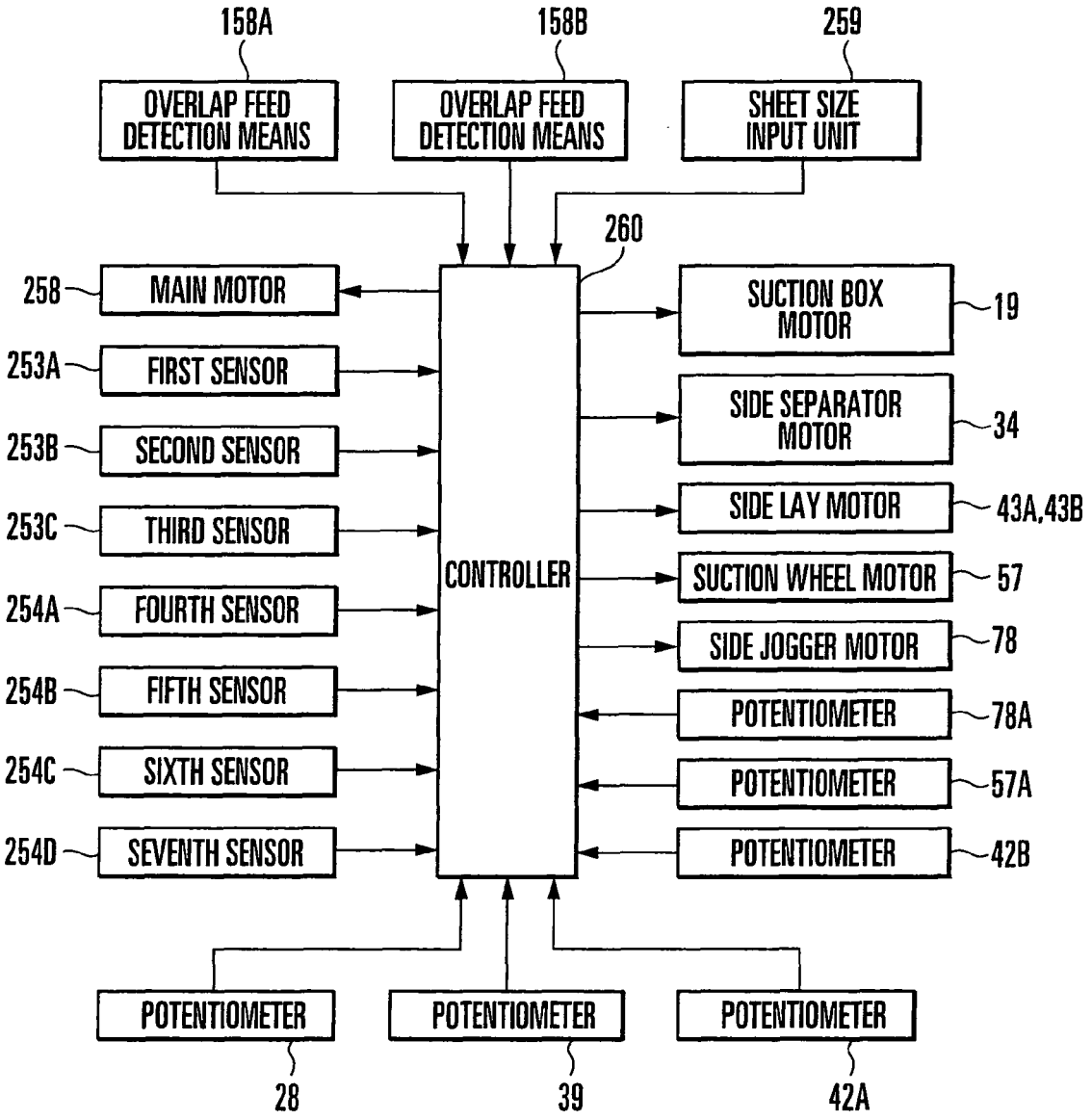
158A
158B
259
OVERLAP FEED DETECTION MEANS
OVERLAP FEED DETECTION MEANS
SHEET SIZE INPUT UNIT
260
258
MAIN MOTOR
253A
FIRST SENSOR
253B
SECOND SENSOR
253C
THIRD SENSOR
254A
FOURTH SENSOR
254B
FIFTH SENSOR
254C
SIXTH SENSOR
254D
SEVENTH SENSOR
CONTROLLER
SUCTION BOX MOTOR
19
SIDE SEPARATOR MOTOR
34
SIDE LAY MOTOR
43A,43B
SUCTION WHEEL MOTOR
57
SIDE JOGGER MOTOR
78
POTENTIOMETER
78A
POTENTIOMETER
57A
POTENTIOMETER
42B
POTENTIOMETER
28
POTENTIOMETER
39
POTENTIOMETER
42A

FIG. 33

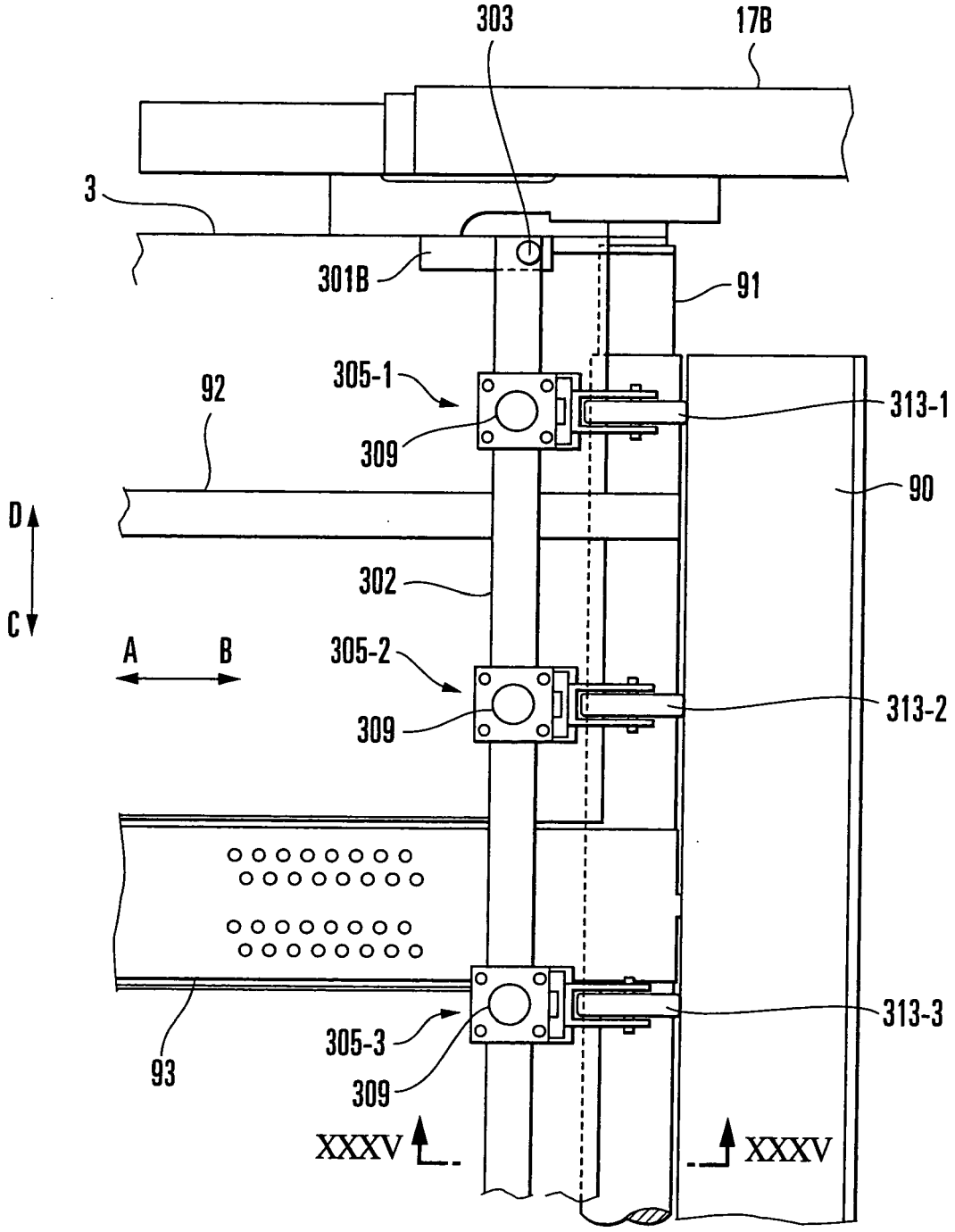
303
17B
3
301B
91
305-1
92
313-1
309
90
D
C
302
A
B
305-2
313-2
309
313-3
305-3
93
309
XXXV
XXXV

FIG. 34A

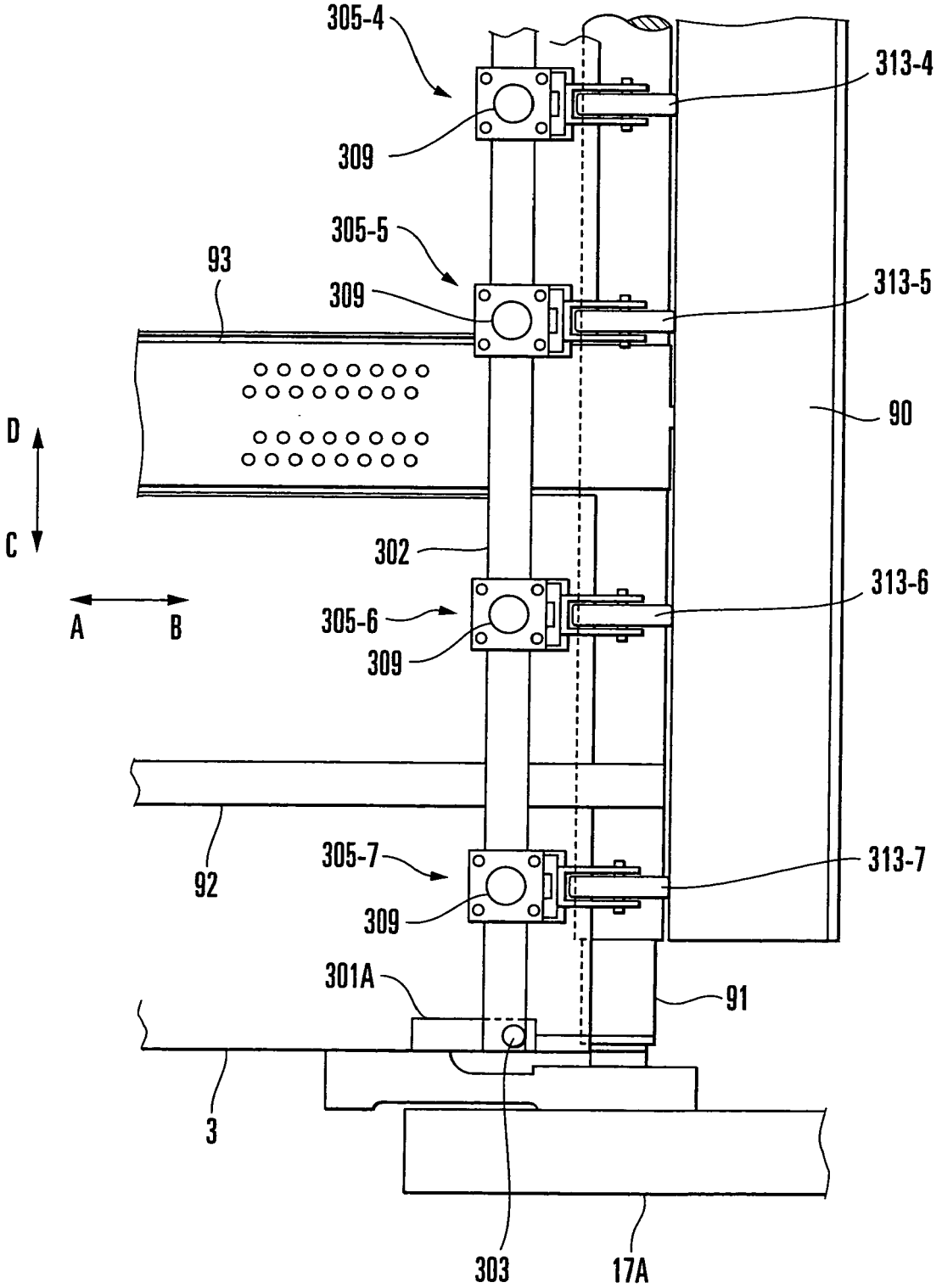
305-4
313-4
309
305-5
93
309
313-5
90
D
C
302
313-6
A
B
305-6
309
92
305-7
313-7
309
301A
91
3
303
17A

FIG. 34B

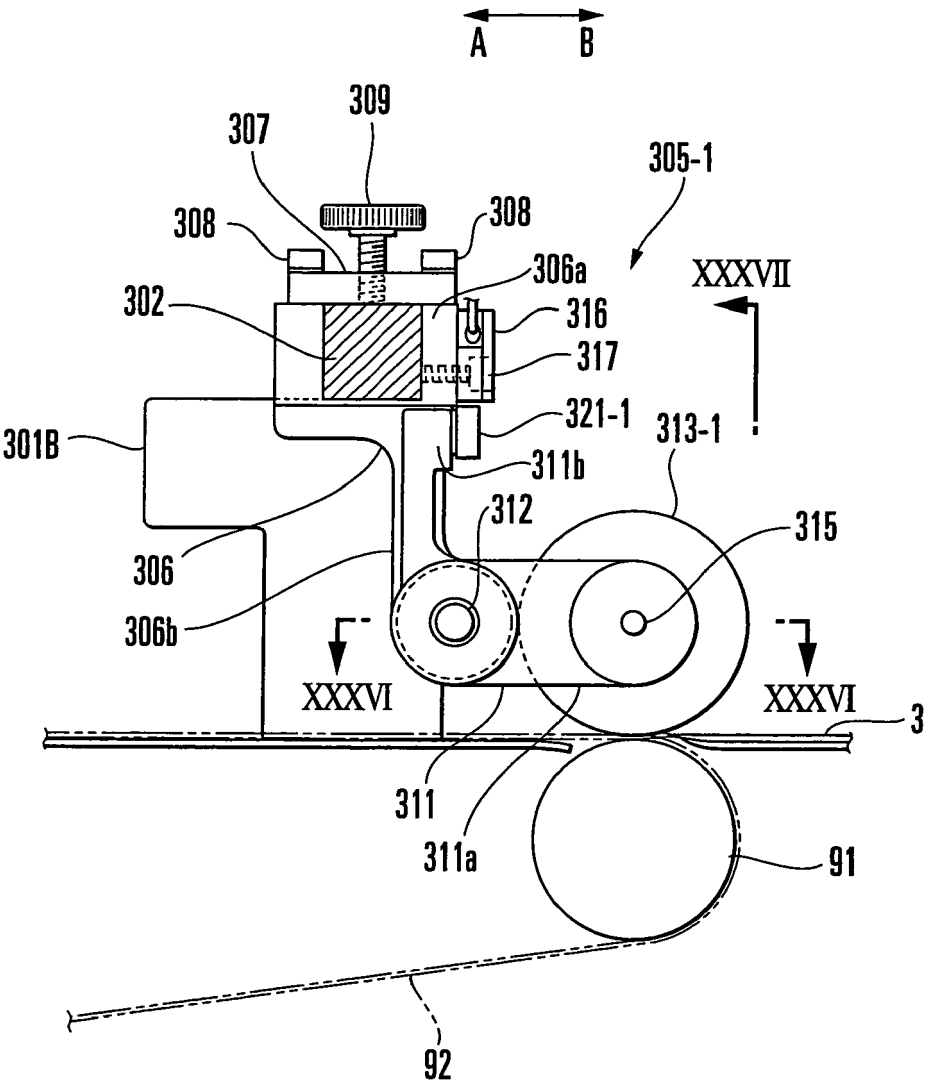
A
B
309
307
305-1
308
308
306a
XXXVII
302
316
317
321-1
313-1
301B
311b
312
315
306
306b
XXXVI
XXXVI
3
311
311a
91
92

FIG. 35

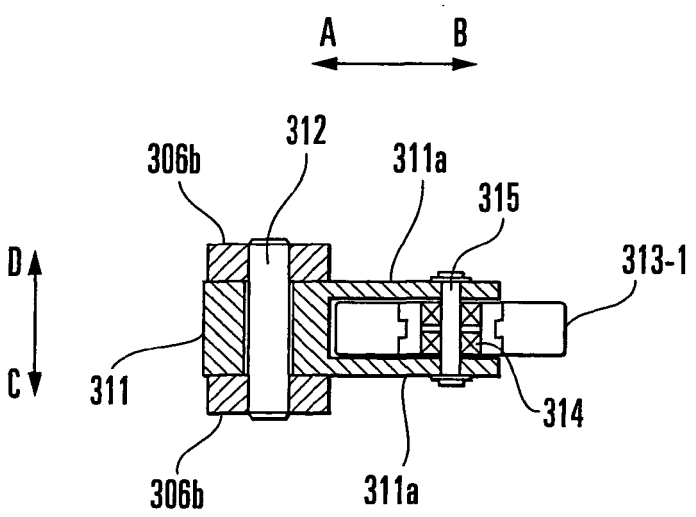
A
B
312
306b
311a
315
D
313-1
C
311
314
306b
311a

FIG. 36

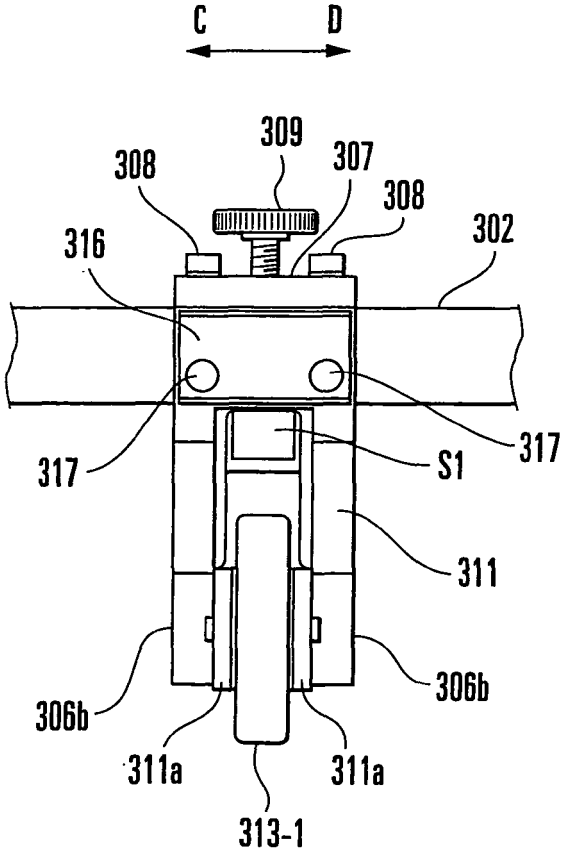
C
D
309
308
307
308
302
316
317
S1
317
311
306b
306b
311a
311a
313-1

FIG. 37

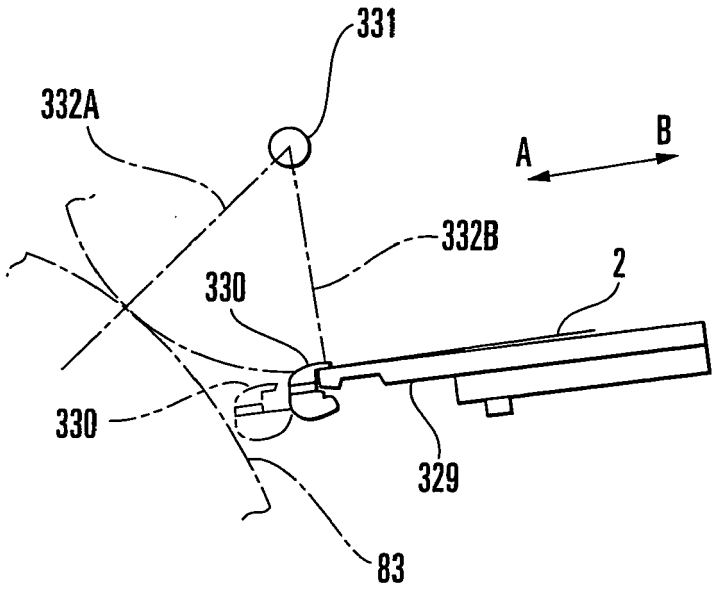

FIG. 38

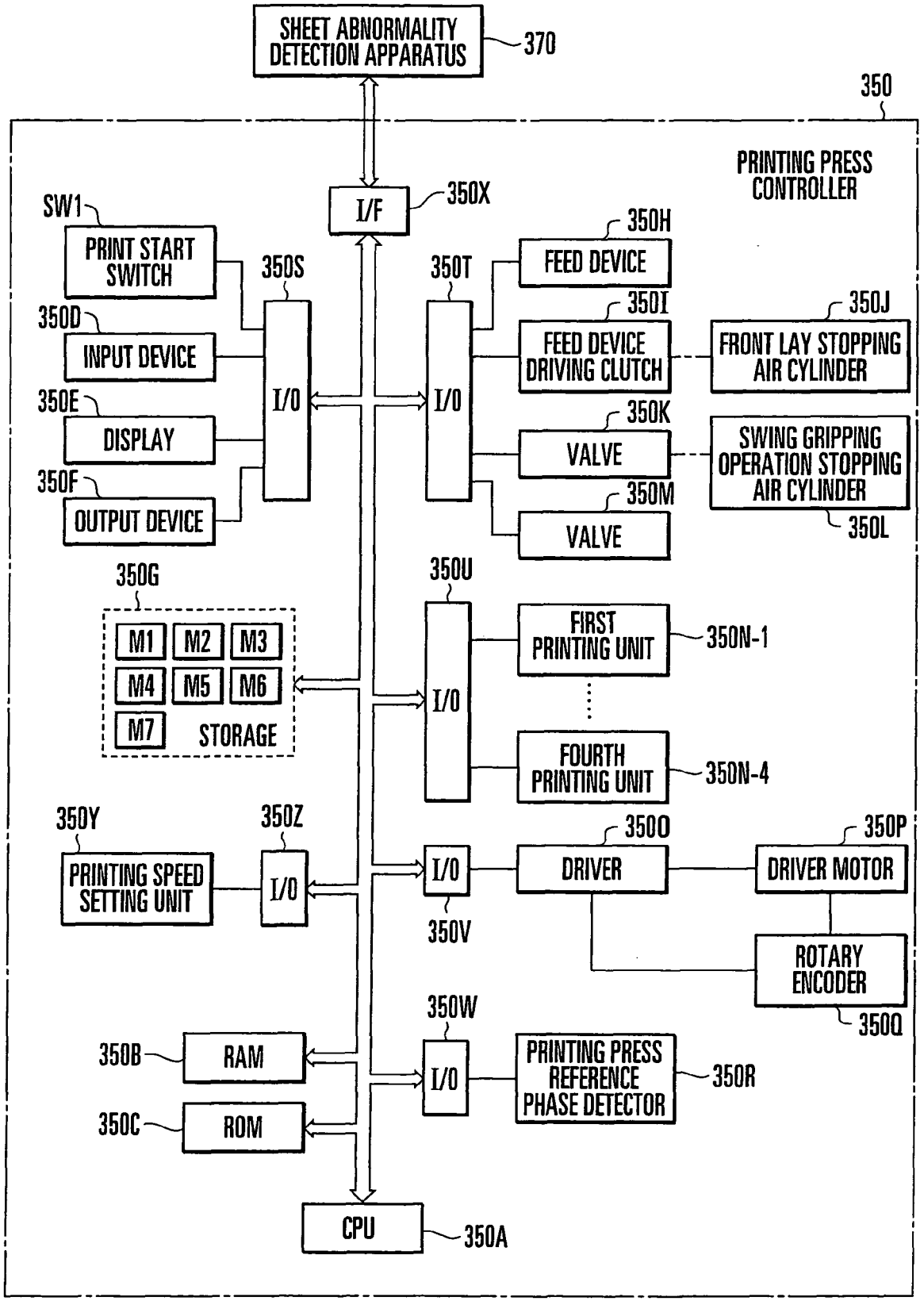
SHEET ABNORMALITY DETECTION APPARATUS
370
350
PRINTING PRESS CONTROLLER
I/F
350X
SW1
PRINT START SWITCH
350S
350T
350H
FEED DEVICE
350D
INPUT DEVICE
I/O
I/O
350I
FEED DEVICE DRIVING CLUTCH
350J
FRONT LAY STOPPING AIR CYLINDER
350E
DISPLAY
350K
VALVE
SWING GRIPPING OPERATION STOPPING AIR CYLINDER
350F
OUTPUT DEVICE
350M
VALVE
350L
350G
M1
M2
M3
M4
M5
M6
M7
STORAGE
350U
I/O
FIRST PRINTING UNIT
350N-1
FOURTH PRINTING UNIT
350N-4
350Y
PRINTING SPEED SETTING UNIT
350Z
I/O
I/O
350V
350O
DRIVER
350P
DRIVER MOTOR
ROTARY ENCODER
350Q
350W
I/O
PRINTING PRESS REFERENCE PHASE DETECTOR
350R
350B
RAM
350C
ROM
CPU
350A

FIG. 39

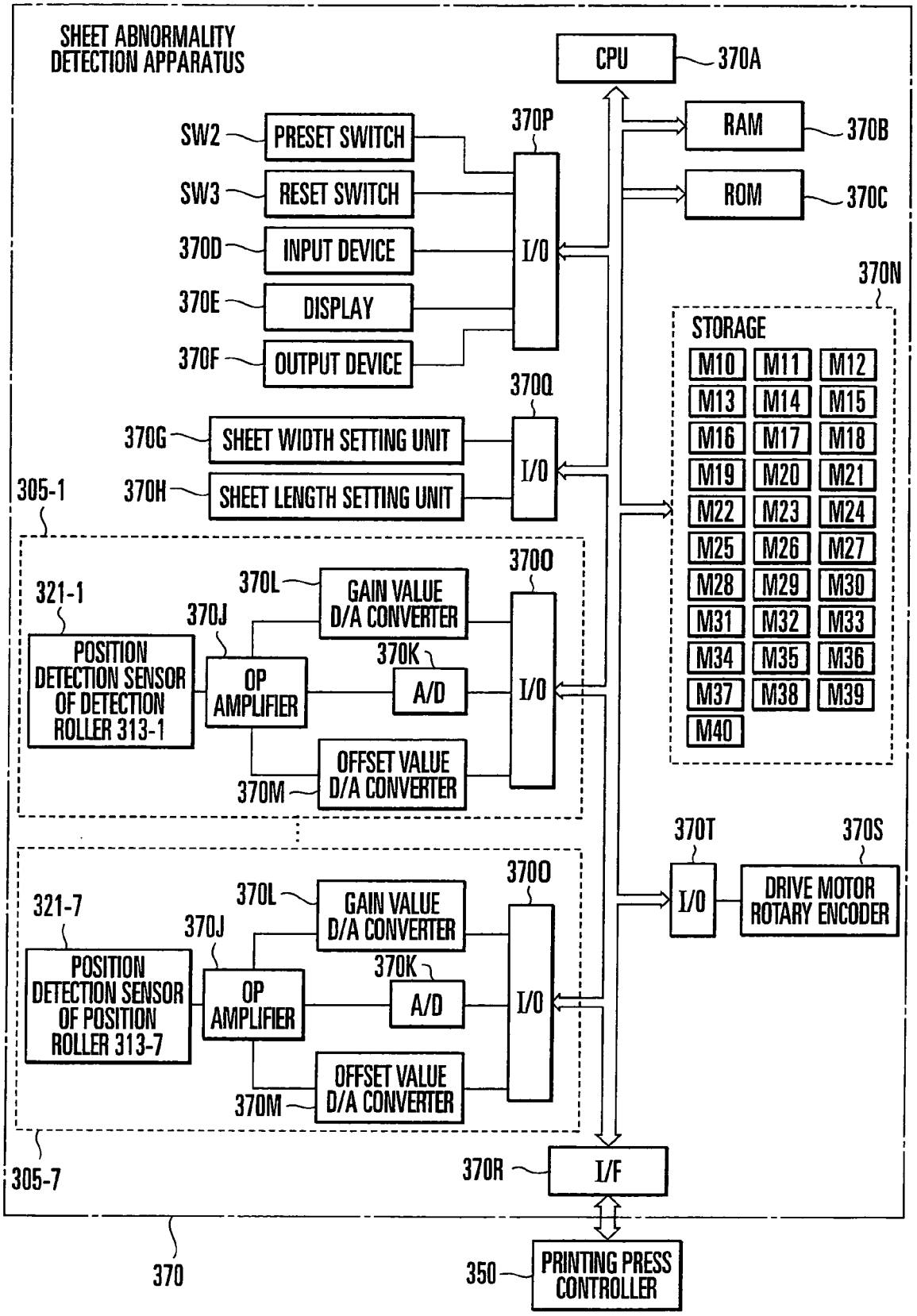
SHEET ABNORMALITY DETECTION APPARATUS
CPU
370A
RAM
370B
ROM
370C
SW2
PRESET SWITCH
SW3
RESET SWITCH
370D
INPUT DEVICE
370E
DISPLAY
370F
OUTPUT DEVICE
370P
I/O
370N
STORAGE
M10 M11 M12
M13 M14 M15
M16 M17 M18
M19 M20 M21
M22 M23 M24
M25 M26 M27
M28 M29 M30
M31 M32 M33
M34 M35 M36
M37 M38 M39
M40
370Q
370G
SHEET WIDTH SETTING UNIT
370H
SHEET LENGTH SETTING UNIT
I/O
305-1
321-1
POSITION DETECTION SENSOR OF DETECTION ROLLER 313-1
370J
OP AMPLIFIER
370L
GAIN VALUE D/A CONVERTER
370K
A/D
370M
OFFSET VALUE D/A CONVERTER
370O
I/O
321-7
POSITION DETECTION SENSOR OF POSITION ROLLER 313-7
370J
OP AMPLIFIER
370L
GAIN VALUE D/A CONVERTER
370K
A/D
370M
OFFSET VALUE D/A CONVERTER
370O
I/O
305-7
370T
I/O
370S
DRIVE MOTOR ROTARY ENCODER
370R
I/F
370
350
PRINTING PRESS CONTROLLER

FIG. 40

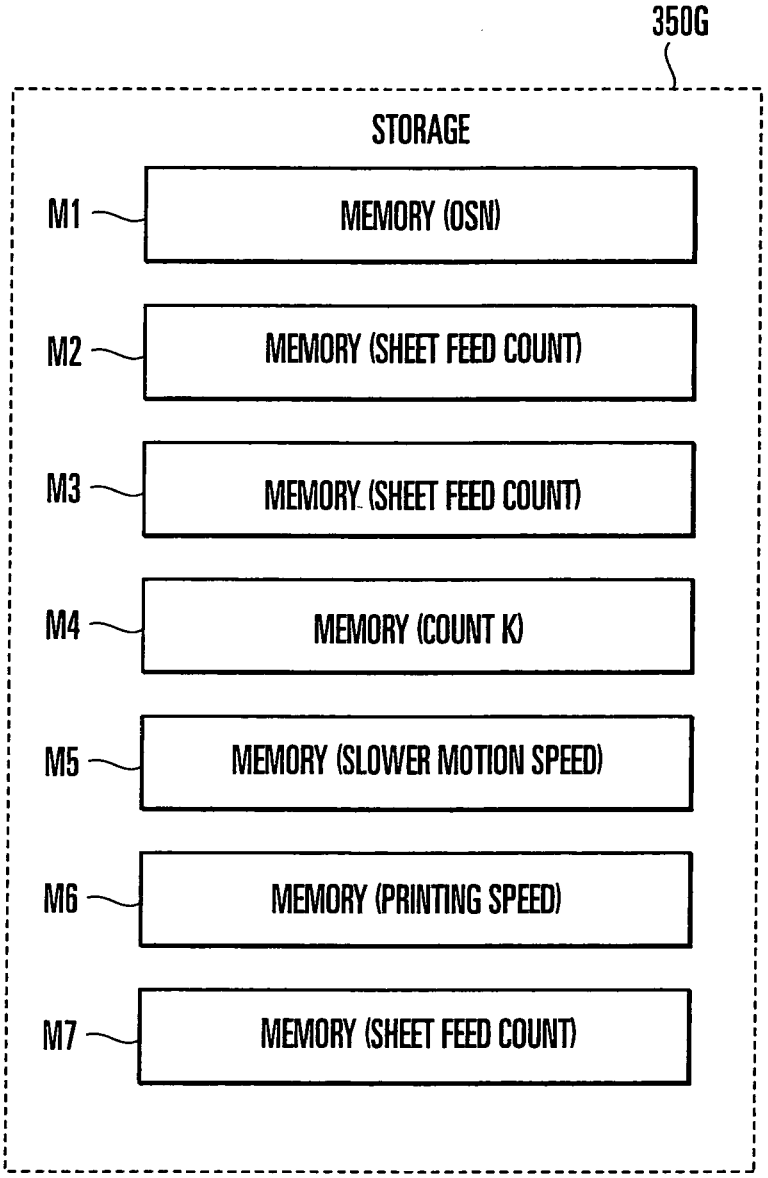
350G
STORAGE
M1
MEMORY (OSN)
M2
MEMORY (SHEET FEED COUNT)
M3
MEMORY (SHEET FEED COUNT)
M4
MEMORY (COUNT K)
M5
MEMORY (SLOWER MOTION SPEED)
M6
MEMORY (PRINTING SPEED)
M7
MEMORY (SHEET FEED COUNT)

FIG. 41

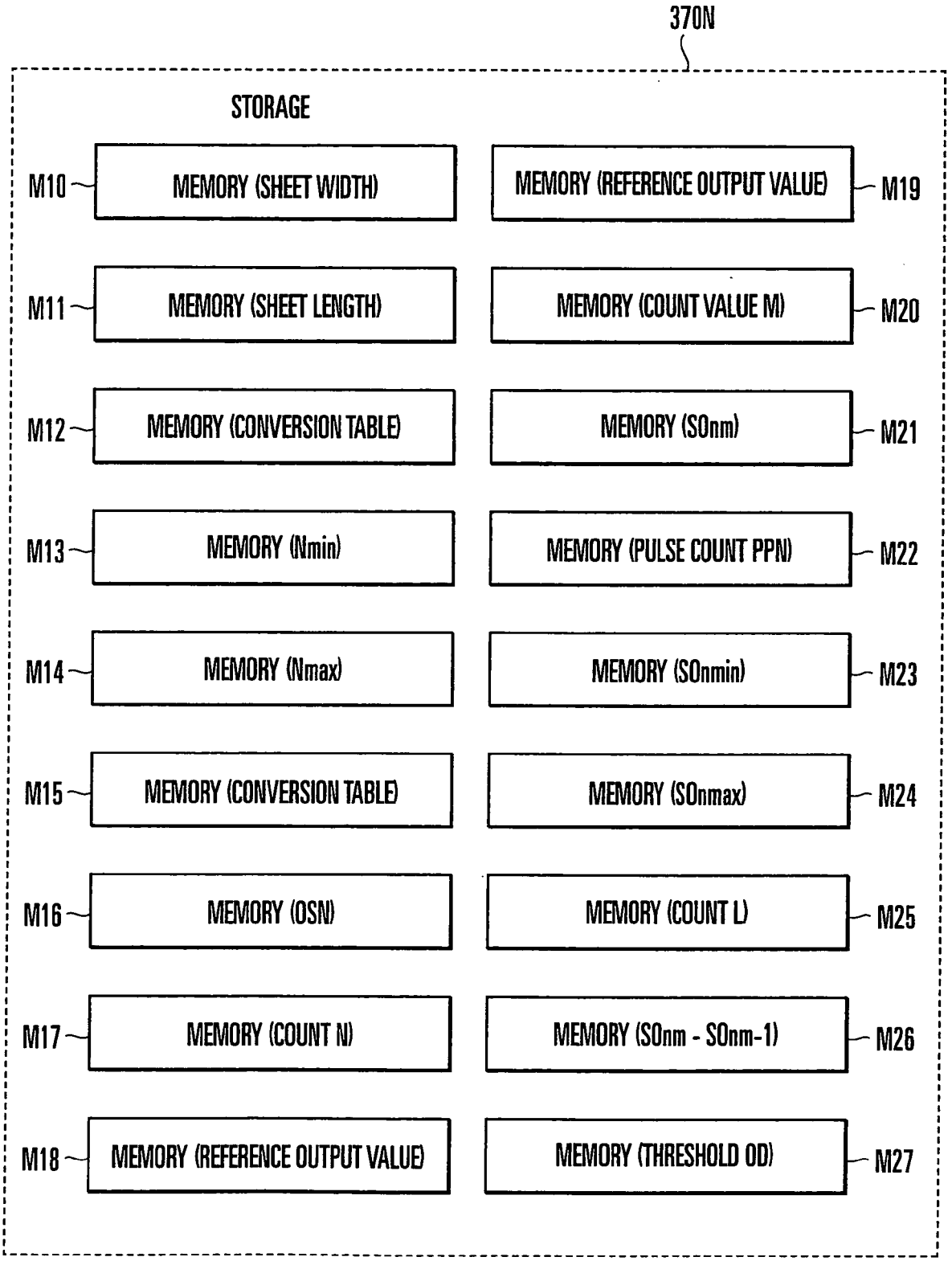
370N
STORAGE
M10
MEMORY (SHEET WIDTH)
M11
MEMORY (SHEET LENGTH)
M12
MEMORY (CONVERSION TABLE)
M13
MEMORY (Nmin)
M14
MEMORY (Nmax)
M15
MEMORY (CONVERSION TABLE)
M16
MEMORY (OSN)
M17
MEMORY (COUNT N)
M18
MEMORY (REFERENCE OUTPUT VALUE)
MEMORY (REFERENCE OUTPUT VALUE)
M19
MEMORY (COUNT VALUE M)
M20
MEMORY (SOnm)
M21
MEMORY (PULSE COUNT PPN)
M22
MEMORY (SOnmin)
M23
MEMORY (SOnmax)
M24
MEMORY (COUNT L)
M25
MEMORY (SOnm - SOnm-1)
M26
MEMORY (THRESHOLD OD)
M27

FIG. 42A

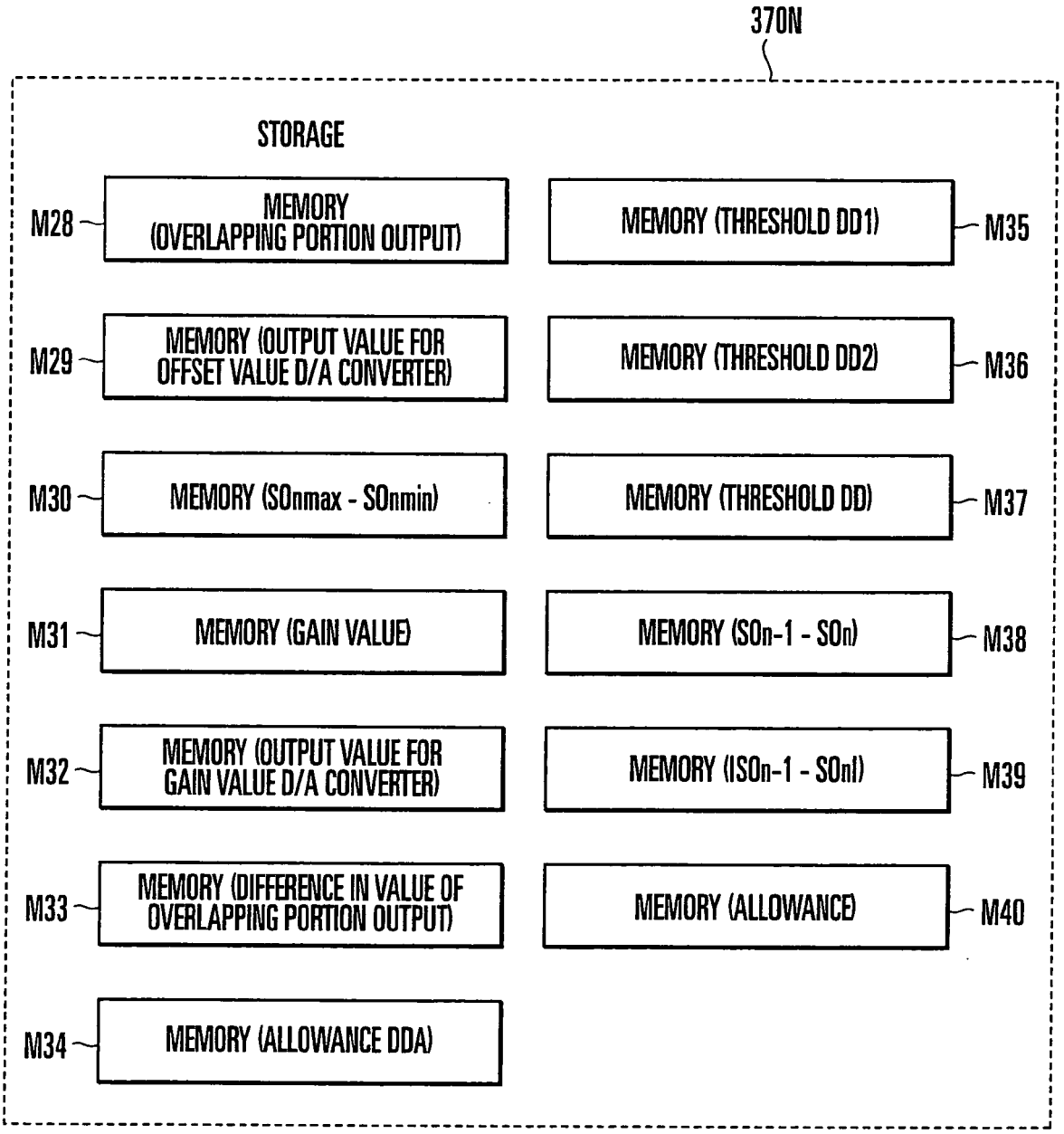
370N
STORAGE
M28
MEMORY (OVERLAPPING PORTION OUTPUT)
M29
MEMORY (OUTPUT VALUE FOR OFFSET VALUE D/A CONVERTER)
M30
MEMORY (SOnmax - SOnmin)
M31
MEMORY (GAIN VALUE)
M32
MEMORY (OUTPUT VALUE FOR GAIN VALUE D/A CONVERTER)
M33
MEMORY (DIFFERENCE IN VALUE OF OVERLAPPING PORTION OUTPUT)
M34
MEMORY (ALLOWANCE DDA)
MEMORY (THRESHOLD DD1)
M35
MEMORY (THRESHOLD DD2)
M36
MEMORY (THRESHOLD DD)
M37
MEMORY (SOn-1 - SOn)
M38
MEMORY (ISOn-1 - SOnl)
M39
MEMORY (ALLOWANCE)
M40

FIG. 42B

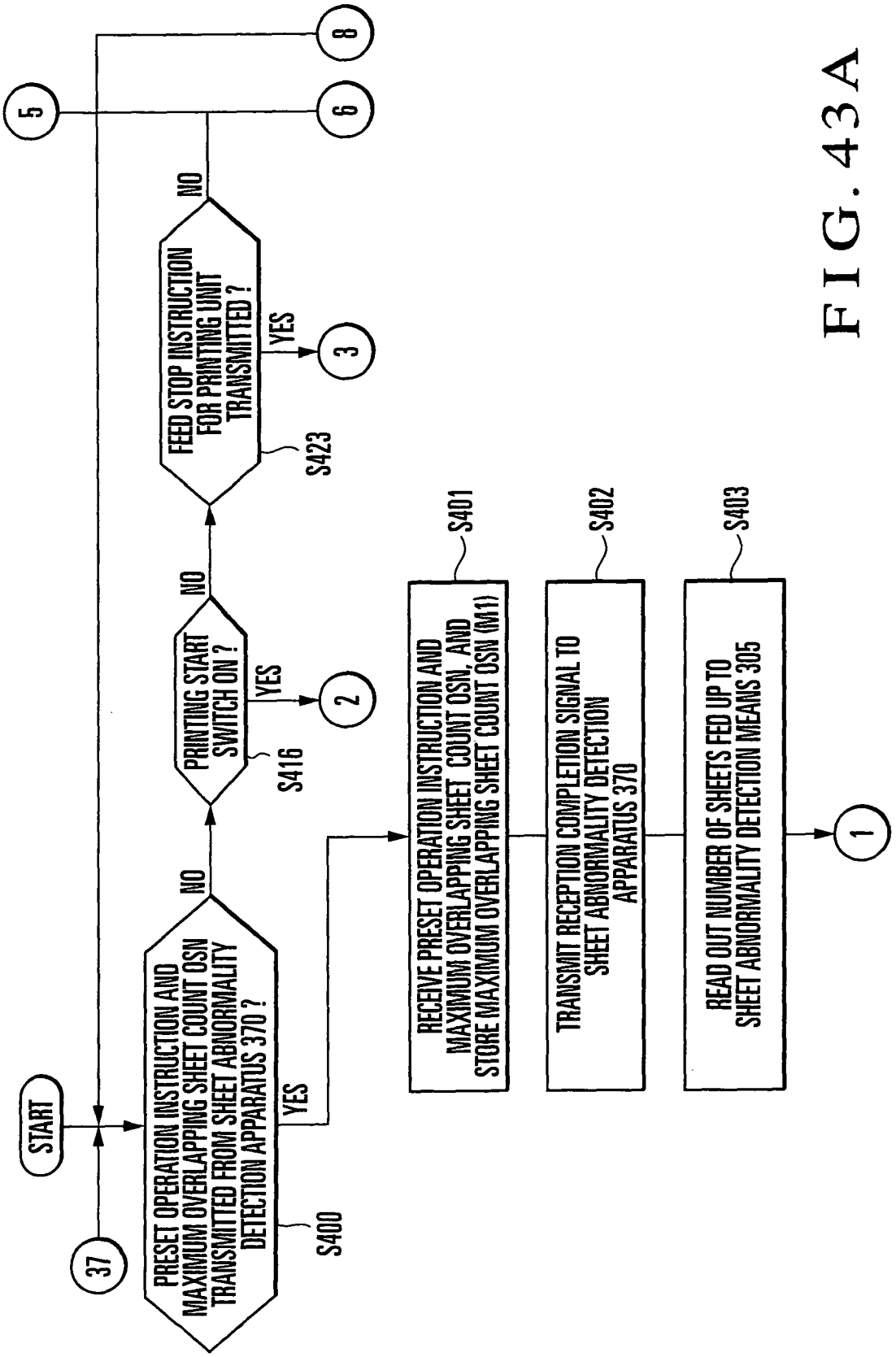
START
37
PRESET OPERATION INSTRUCTION AND MAXIMUM OVERLAPPING SHEET COUNT OSN TRANSMITTED FROM SHEET ABNORMALITY DETECTION APPARATUS 370 ?
S400
YES
NO
PRINTING START SWITCH ON ?
S416
YES
NO
2
FEED STOP INSTRUCTION FOR PRINTING UNIT TRANSMITTED ?
S423
YES
NO
3
5
6
8
RECEIVE PRESET OPERATION INSTRUCTION AND MAXIMUM OVERLAPPING SHEET COUNT OSN, AND STORE MAXIMUM OVERLAPPING SHEET COUNT OSN (M11)
S401
TRANSMIT RECEPTION COMPLETION SIGNAL TO SHEET ABNORMALITY DETECTION APPARATUS 370
S402
READ OUT NUMBER OF SHEETS FED UP TO SHEET ABNORMALITY DETECTION MEANS 305
S403
1

FIG. 43A

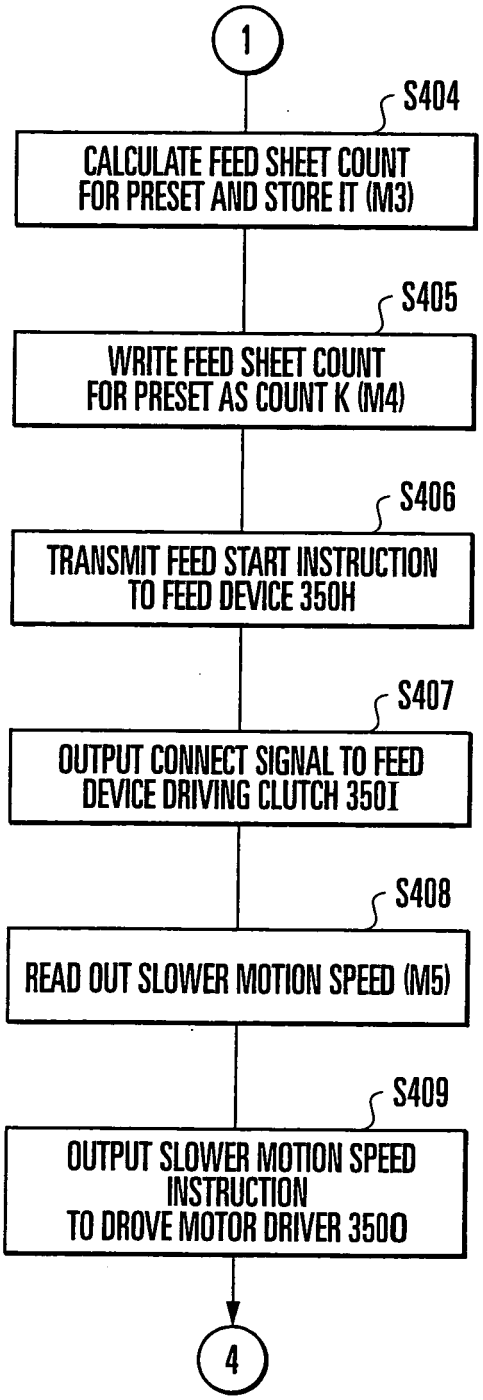

FIG.43B

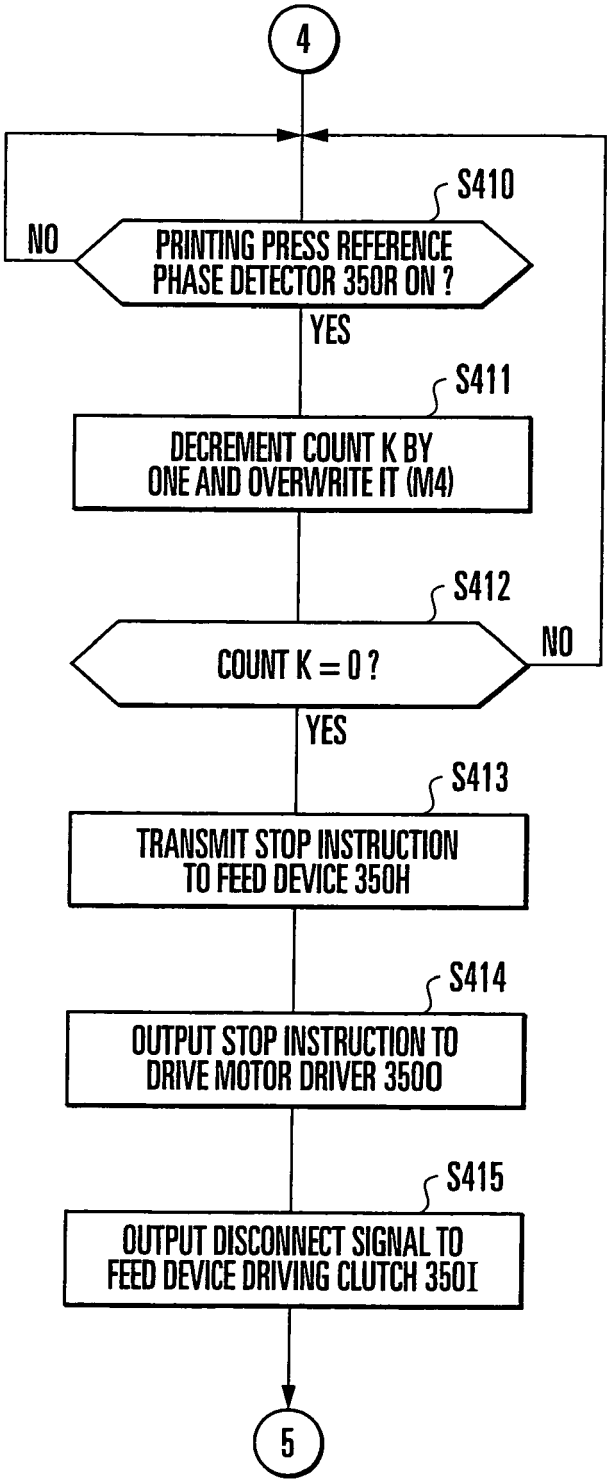

FIG.43C

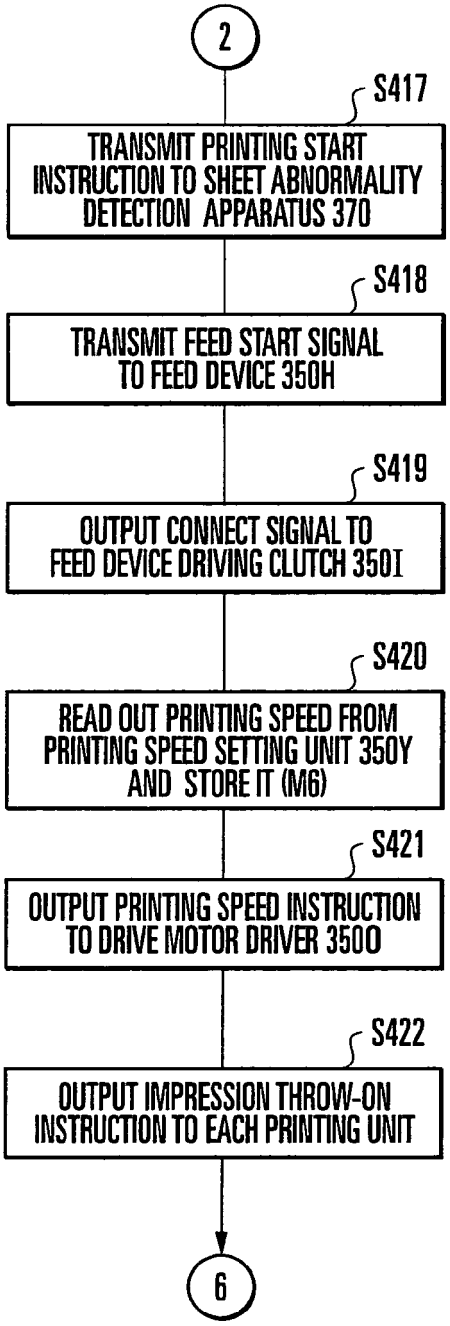

FIG.43D

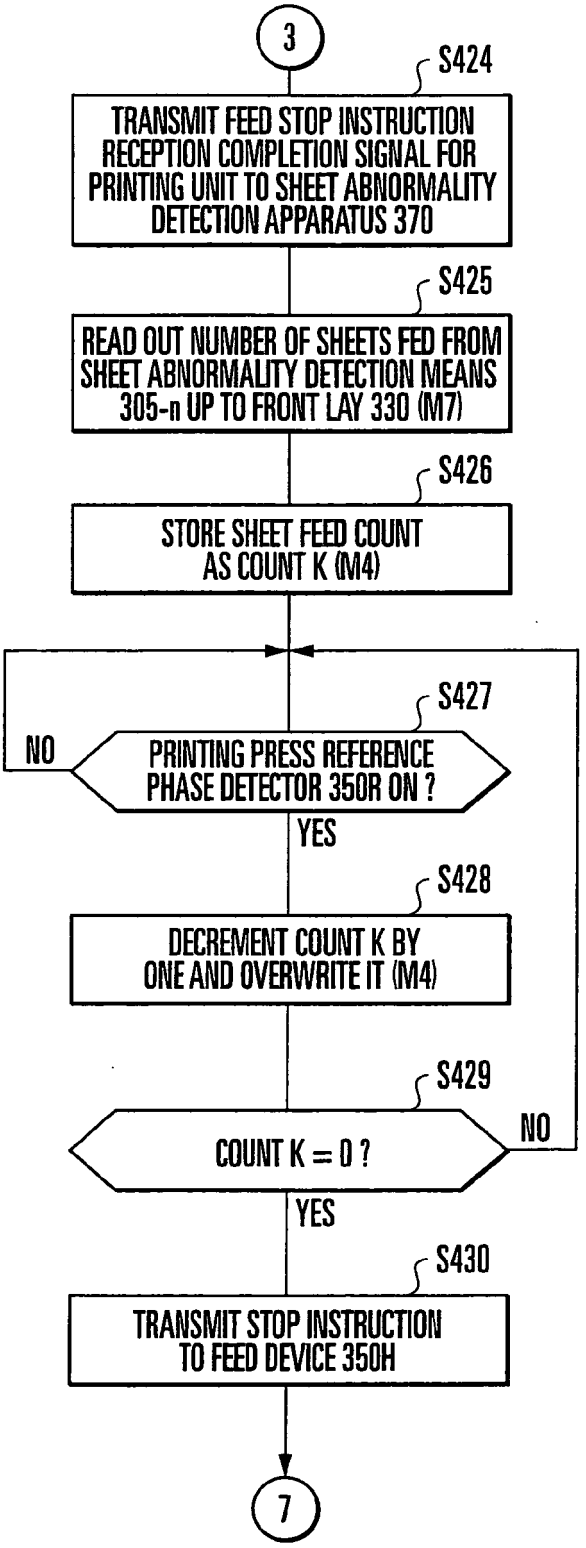

FIG.43E

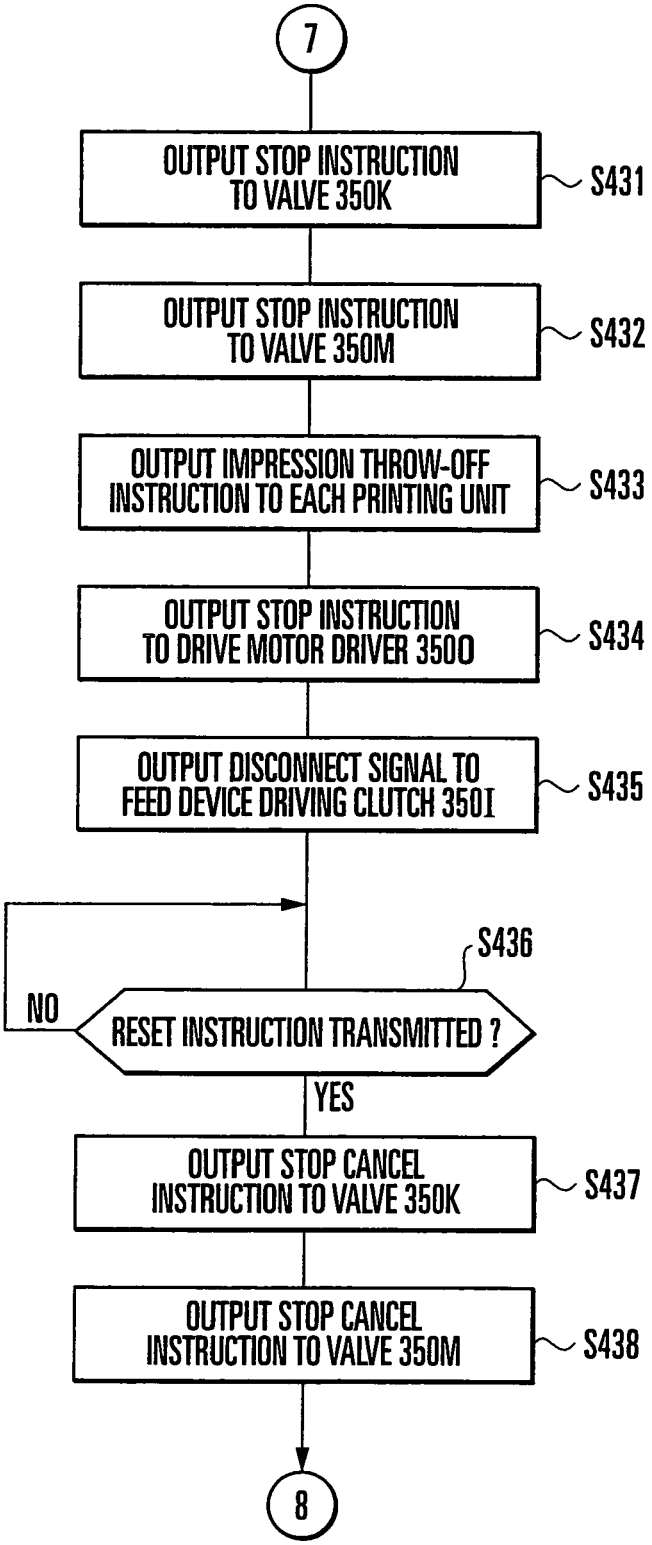
7
OUTPUT STOP INSTRUCTION TO VALVE 350K
S431
OUTPUT STOP INSTRUCTION TO VALVE 350M
S432
OUTPUT IMPRESSION THROW-OFF INSTRUCTION TO EACH PRINTING UNIT
S433
OUTPUT STOP INSTRUCTION TO DRIVE MOTOR DRIVER 350O
S434
OUTPUT DISCONNECT SIGNAL TO FEED DEVICE DRIVING CLUTCH 350I
S435
S436
NO
RESET INSTRUCTION TRANSMITTED ?
YES
OUTPUT STOP CANCEL INSTRUCTION TO VALVE 350K
S437
OUTPUT STOP CANCEL INSTRUCTION TO VALVE 350M
S438
8

FIG.43F

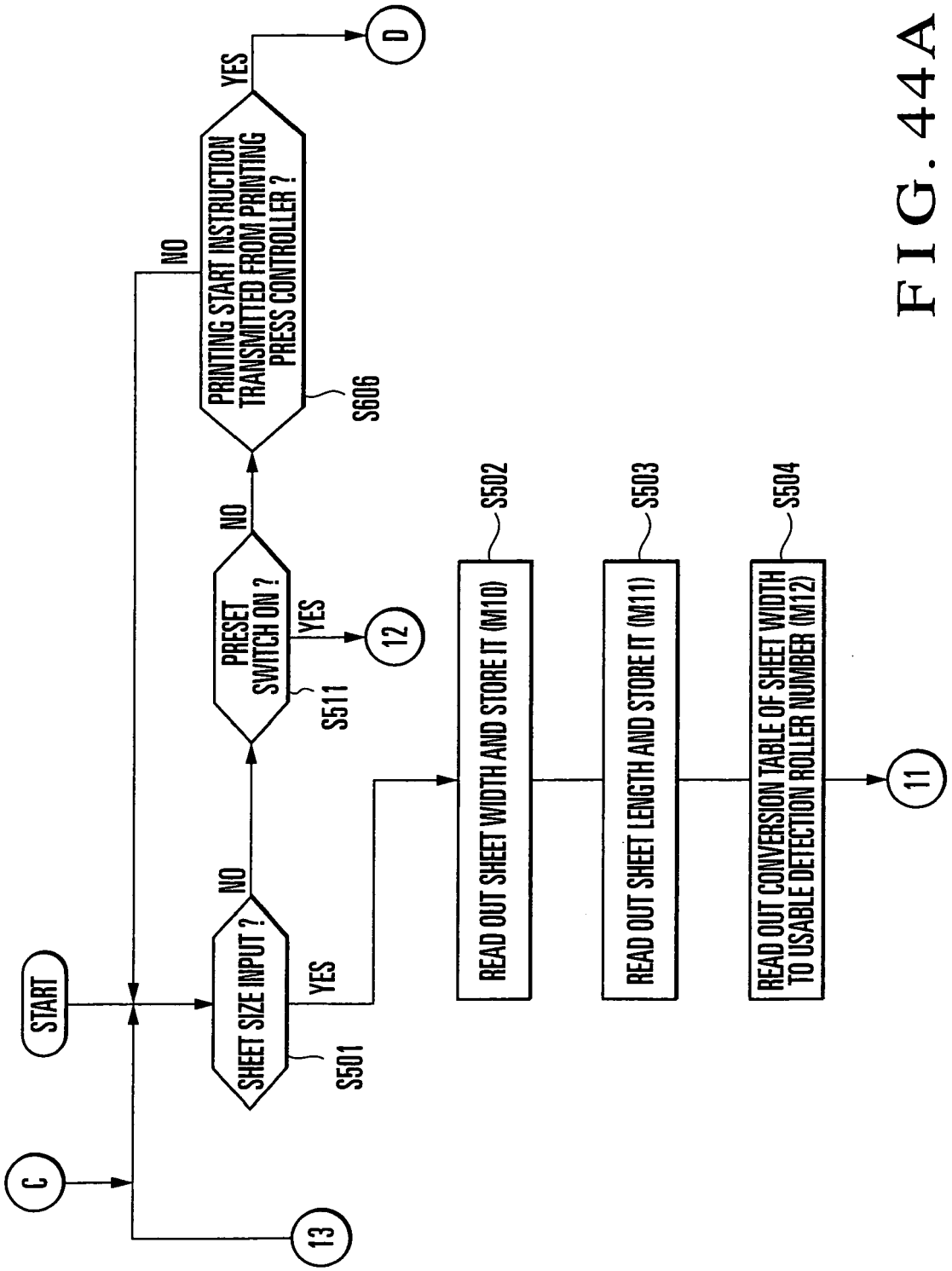
START
C
SHEET SIZE INPUT ?
S501
NO
YES
13
PRESET SWITCH ON ?
S511
NO
YES
12
PRINTING START INSTRUCTION TRANSMITTED FROM PRINTING PRESS CONTROLLER ?
S606
NO
YES
D
READ OUT SHEET WIDTH AND STORE IT (M10)
S502
READ OUT SHEET LENGTH AND STORE IT (M11)
S503
READ OUT CONVERSION TABLE OF SHEET WIDTH TO USABLE DETECTION ROLLER NUMBER (M12)
S504
11

FIG. 44A

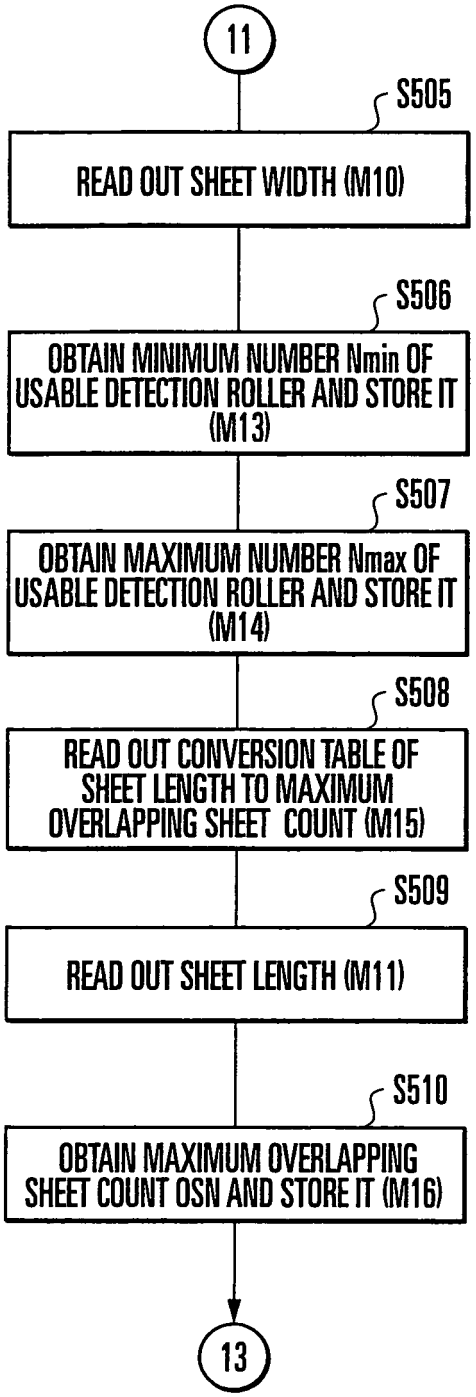

FIG.44B

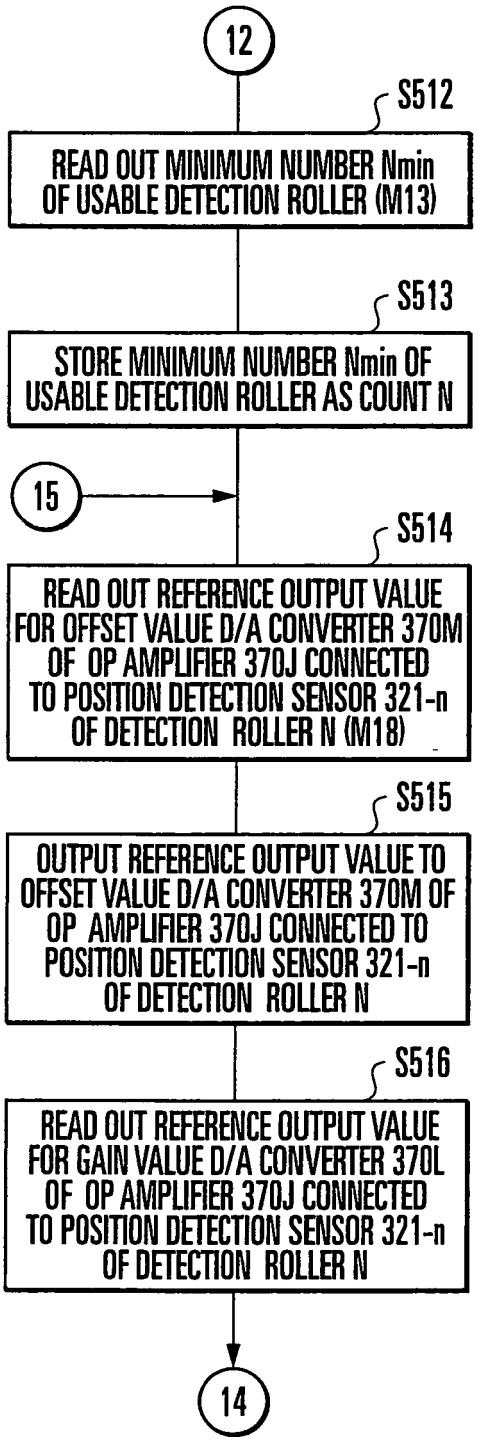

FIG.44C

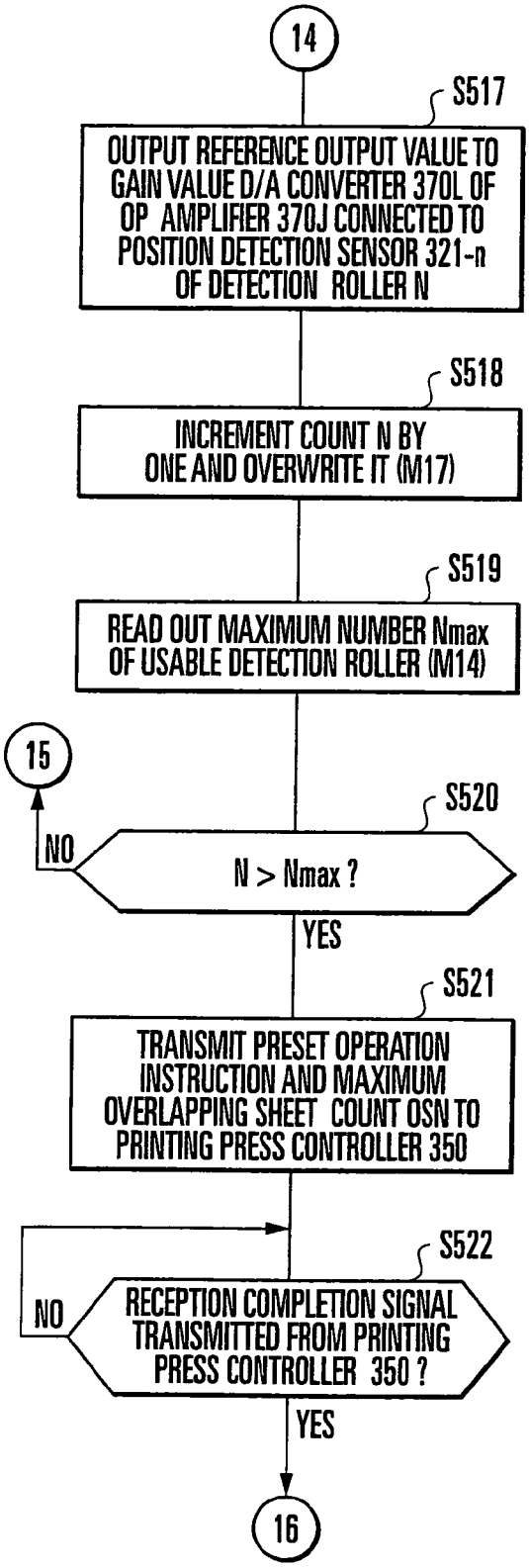

FIG.44D

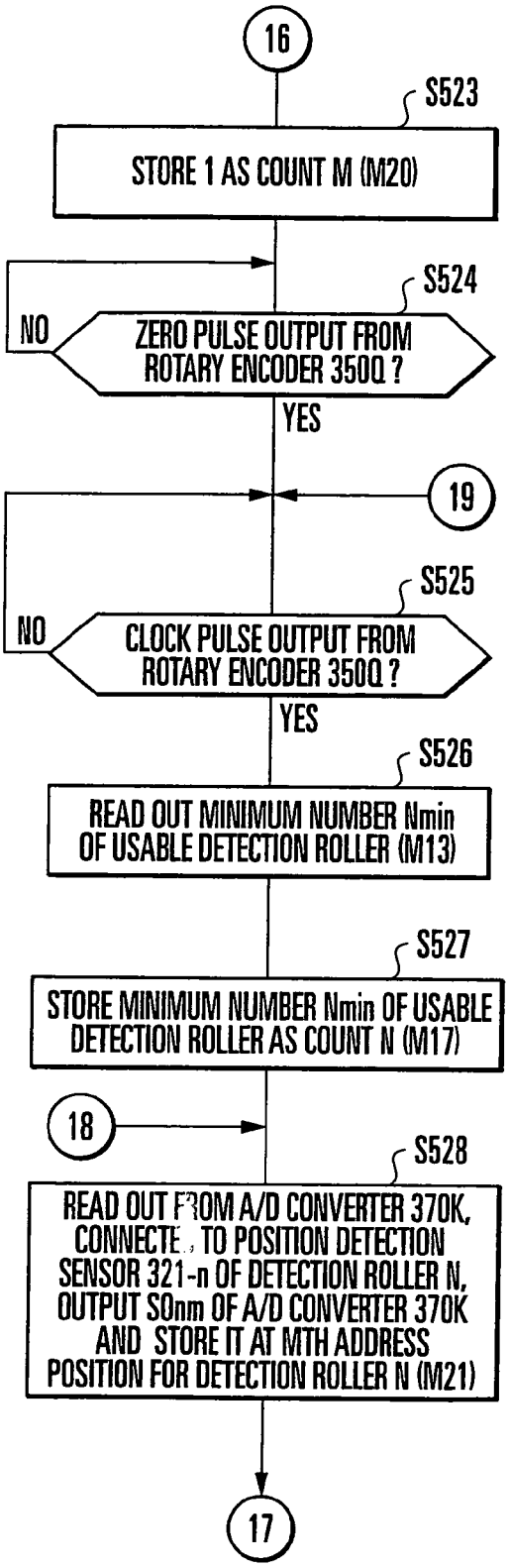

FIG.44E

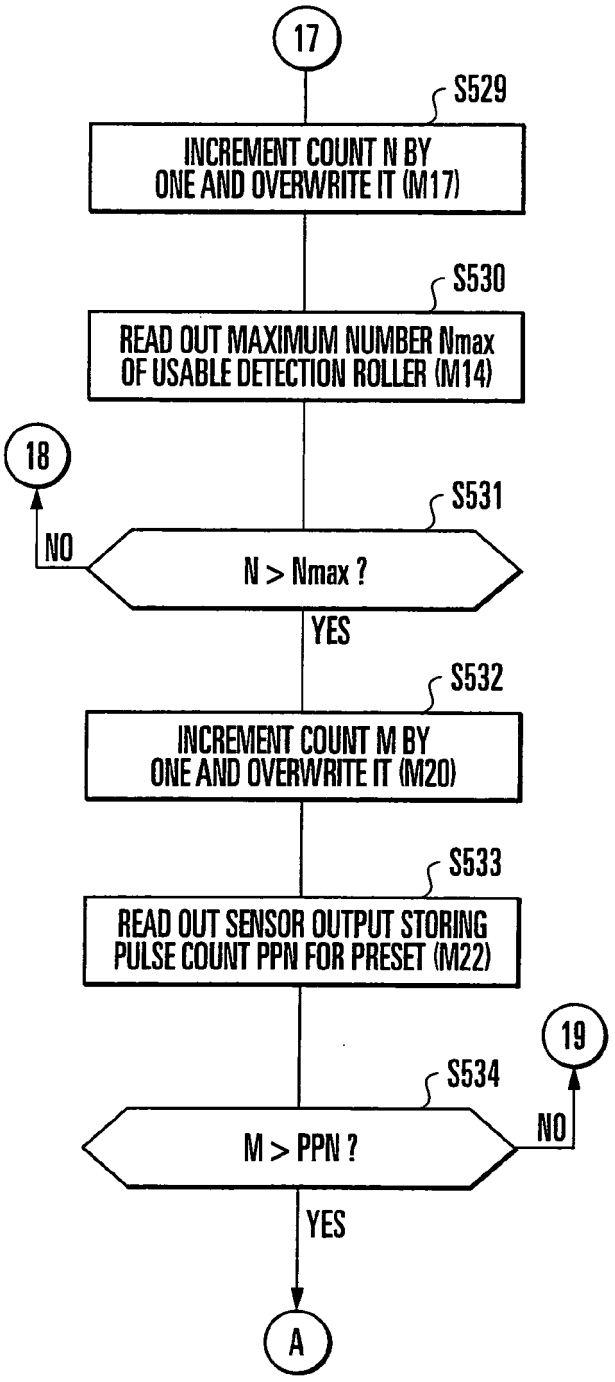

FIG.44F

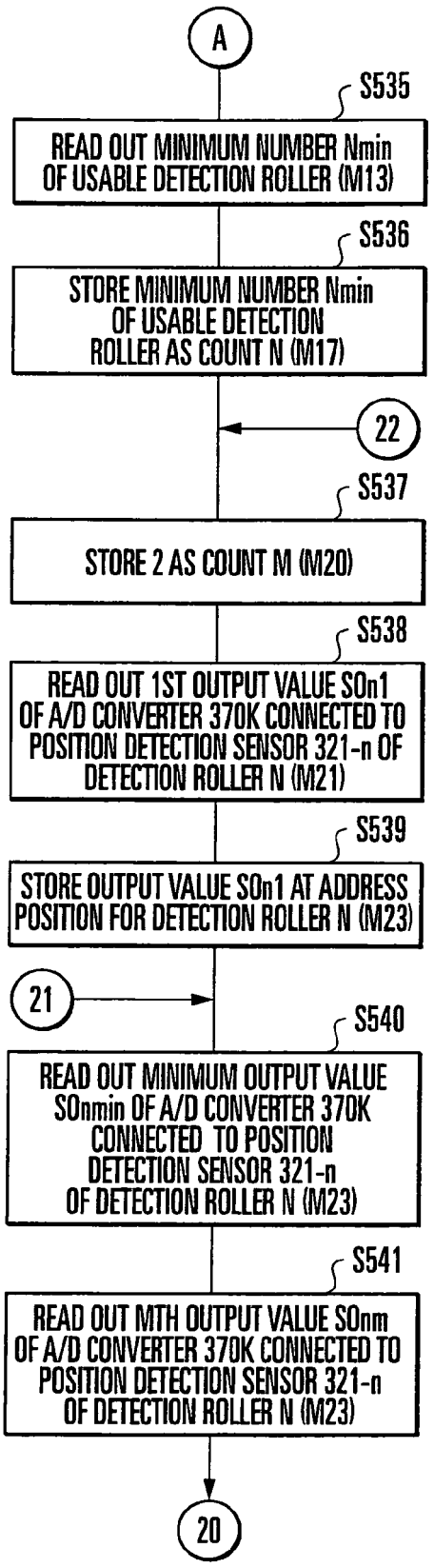

FIG.44G

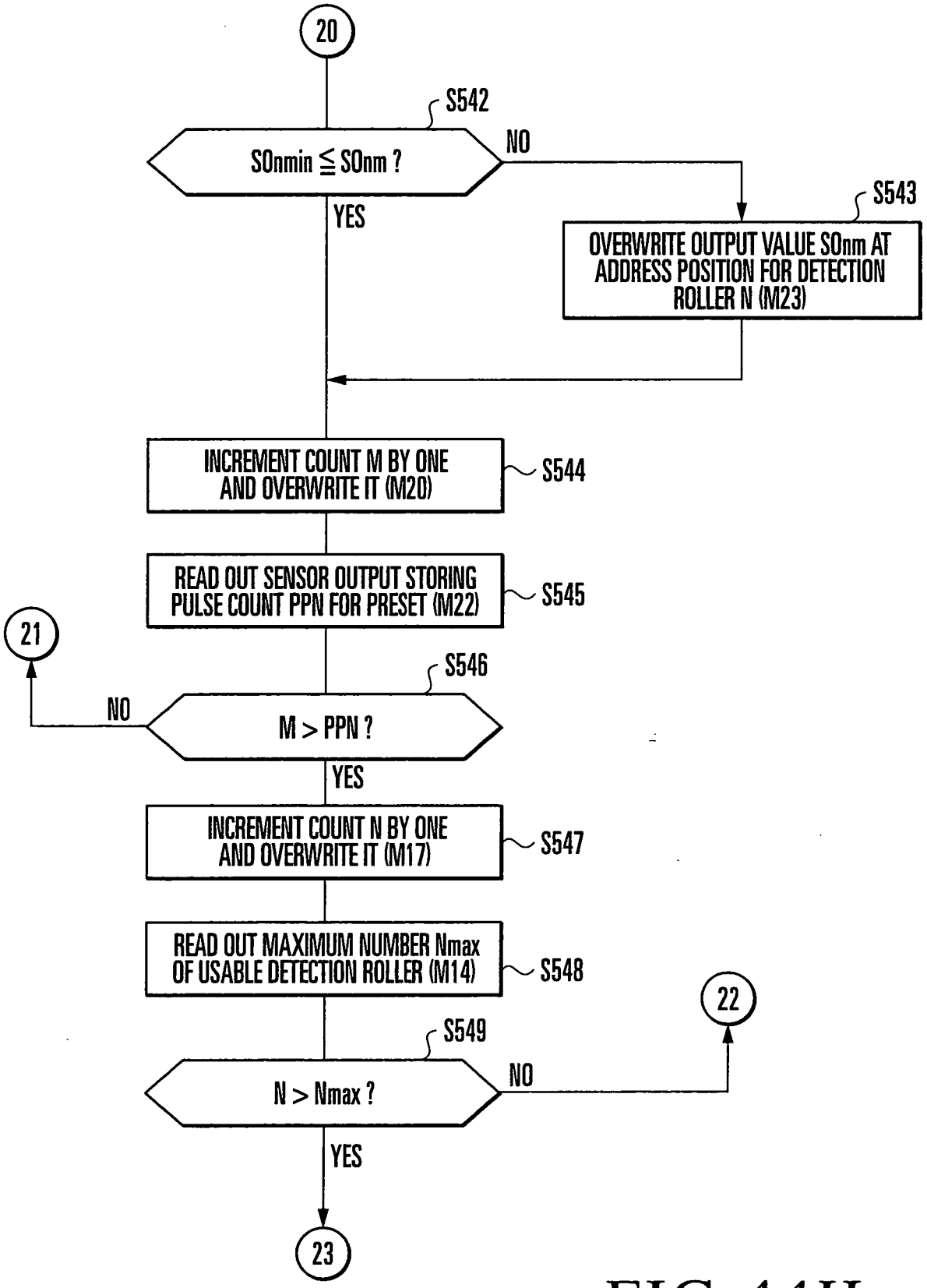
20
S542
SOnmin ≦ SOnm ?
NO
YES
S543
OVERWRITE OUTPUT VALUE SOnm AT ADDRESS POSITION FOR DETECTION ROLLER N (M23)
INCREMENT COUNT M BY ONE AND OVERWRITE IT (M20)
S544
READ OUT SENSOR OUTPUT STORING PULSE COUNT PPN FOR PRESET (M22)
S545
21
S546
NO
M > PPN ?
YES
INCREMENT COUNT N BY ONE AND OVERWRITE IT (M17)
S547
READ OUT MAXIMUM NUMBER Nmax OF USABLE DETECTION ROLLER (M14)
S548
22
S549
N > Nmax ?
NO
YES
23

FIG.44H

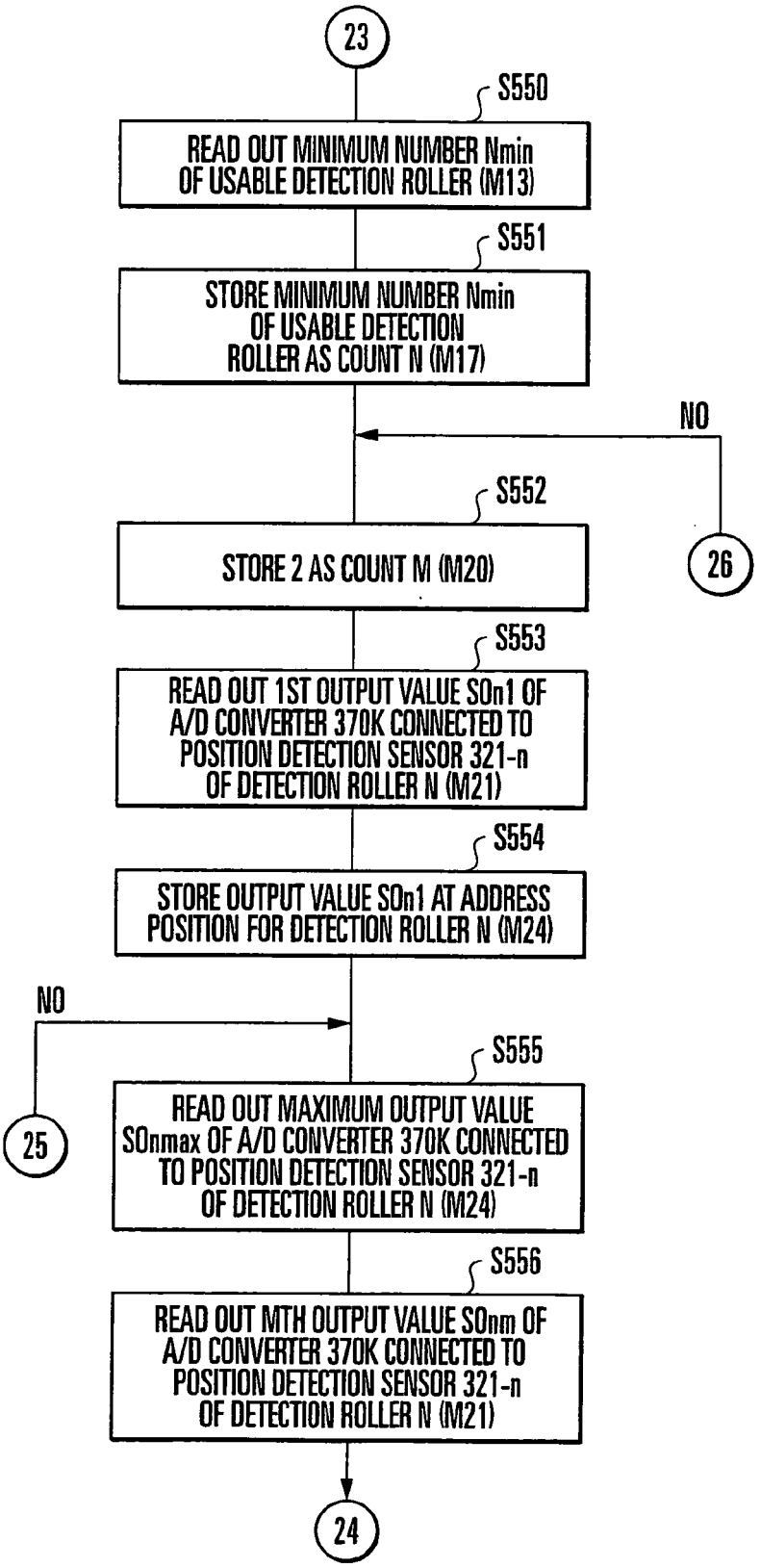
23
S550
READ OUT MINIMUM NUMBER Nmin OF USABLE DETECTION ROLLER (M13)
S551
STORE MINIMUM NUMBER Nmin OF USABLE DETECTION ROLLER AS COUNT N (M17)
NO
26
S552
STORE 2 AS COUNT M (M20)
S553
READ OUT 1ST OUTPUT VALUE SOn1 OF A/D CONVERTER 370K CONNECTED TO POSITION DETECTION SENSOR 321-n OF DETECTION ROLLER N (M21)
S554
STORE OUTPUT VALUE SOn1 AT ADDRESS POSITION FOR DETECTION ROLLER N (M24)
NO
25
S555
READ OUT MAXIMUM OUTPUT VALUE SOnmax OF A/D CONVERTER 370K CONNECTED TO POSITION DETECTION SENSOR 321-n OF DETECTION ROLLER N (M24)
S556
READ OUT MTH OUTPUT VALUE SOnm OF A/D CONVERTER 370K CONNECTED TO POSITION DETECTION SENSOR 321-n OF DETECTION ROLLER N (M21)
24

FIG.44I

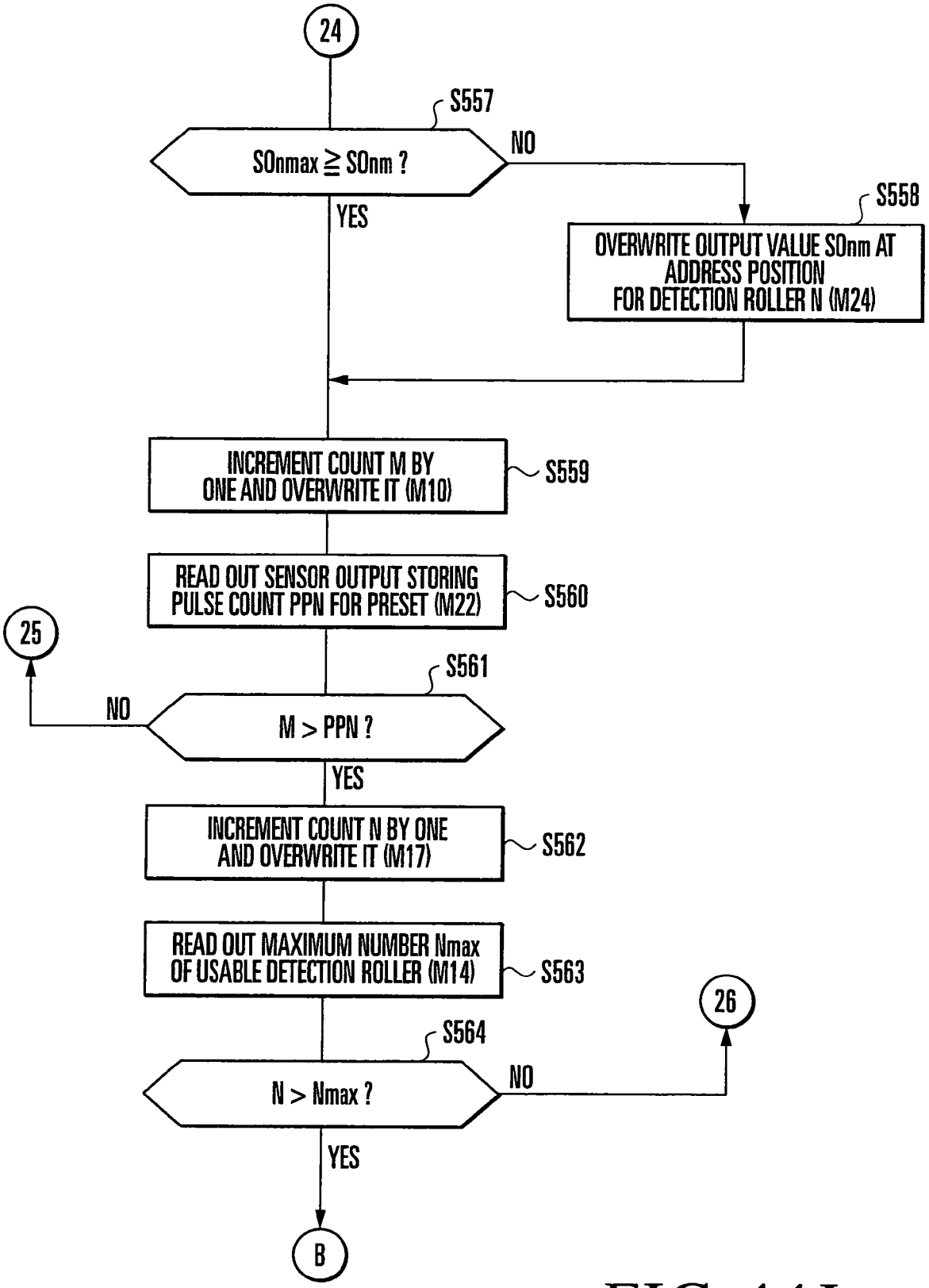
24
S557
SOnmax ≧ SOnm ?
NO
YES
S558
OVERWRITE OUTPUT VALUE SOnm AT ADDRESS POSITION FOR DETECTION ROLLER N (M24)
INCREMENT COUNT M BY ONE AND OVERWRITE IT (M10)
S559
READ OUT SENSOR OUTPUT STORING PULSE COUNT PPN FOR PRESET (M22)
S560
25
S561
NO
M > PPN ?
YES
INCREMENT COUNT N BY ONE AND OVERWRITE IT (M17)
S562
READ OUT MAXIMUM NUMBER Nmax OF USABLE DETECTION ROLLER (M14)
S563
26
S564
N > Nmax ?
NO
YES
B

FIG.44J

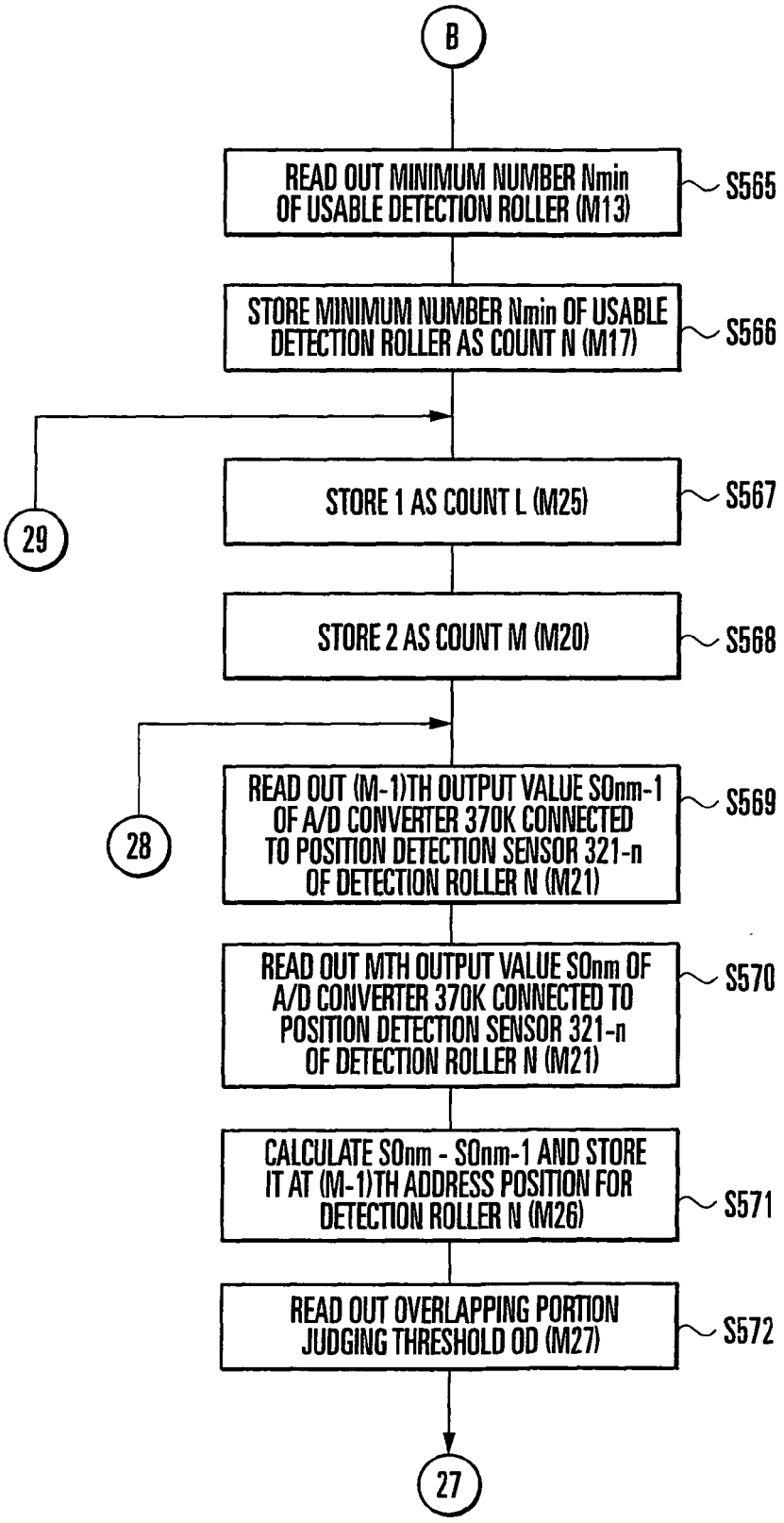
B
READ OUT MINIMUM NUMBER Nmin OF USABLE DETECTION ROLLER (M13)
S565
STORE MINIMUM NUMBER Nmin OF USABLE DETECTION ROLLER AS COUNT N (M17)
S566
29
STORE 1 AS COUNT L (M25)
S567
STORE 2 AS COUNT M (M20)
S568
28
READ OUT (M-1)TH OUTPUT VALUE S0nm-1 OF A/D CONVERTER 370K CONNECTED TO POSITION DETECTION SENSOR 321-n OF DETECTION ROLLER N (M21)
S569
READ OUT MTH OUTPUT VALUE S0nm OF A/D CONVERTER 370K CONNECTED TO POSITION DETECTION SENSOR 321-n OF DETECTION ROLLER N (M21)
S570
CALCULATE S0nm - S0nm-1 AND STORE IT AT (M-1)TH ADDRESS POSITION FOR DETECTION ROLLER N (M26)
S571
READ OUT OVERLAPPING PORTION JUDGING THRESHOLD OD (M27)
S572
27

FIG.44K

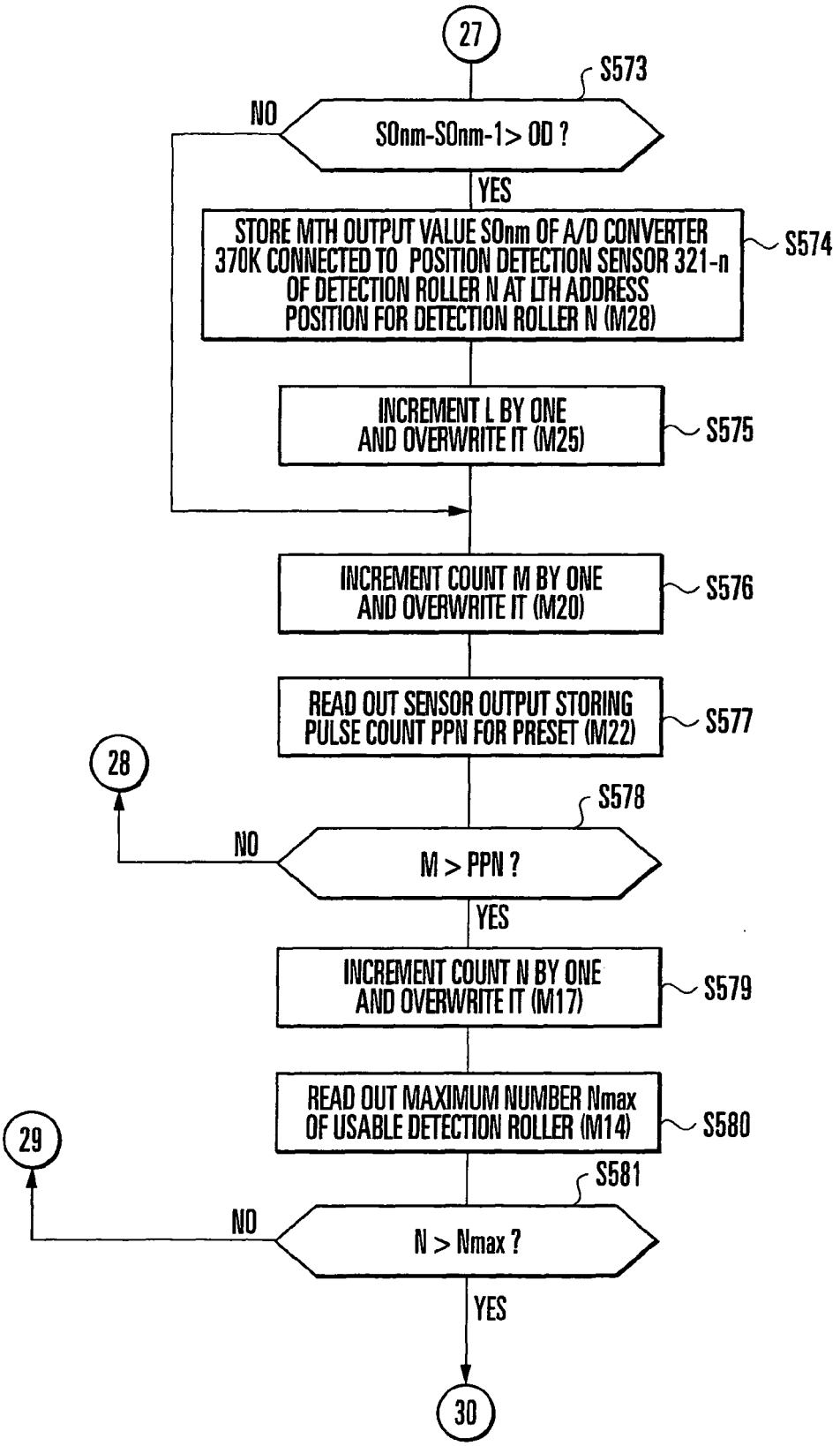
27
S573
NO
SOnm-SOnm-1> OD ?
YES
STORE MTH OUTPUT VALUE SOnm OF A/D CONVERTER 370K CONNECTED TO POSITION DETECTION SENSOR 321-n OF DETECTION ROLLER N AT LTH ADDRESS POSITION FOR DETECTION ROLLER N (M28)
S574
INCREMENT L BY ONE AND OVERWRITE IT (M25)
S575
INCREMENT COUNT M BY ONE AND OVERWRITE IT (M20)
S576
READ OUT SENSOR OUTPUT STORING PULSE COUNT PPN FOR PRESET (M22)
S577
28
S578
NO
M > PPN ?
YES
INCREMENT COUNT N BY ONE AND OVERWRITE IT (M17)
S579
READ OUT MAXIMUM NUMBER Nmax OF USABLE DETECTION ROLLER (M14)
S580
29
S581
NO
N > Nmax ?
YES
30

FIG.44L

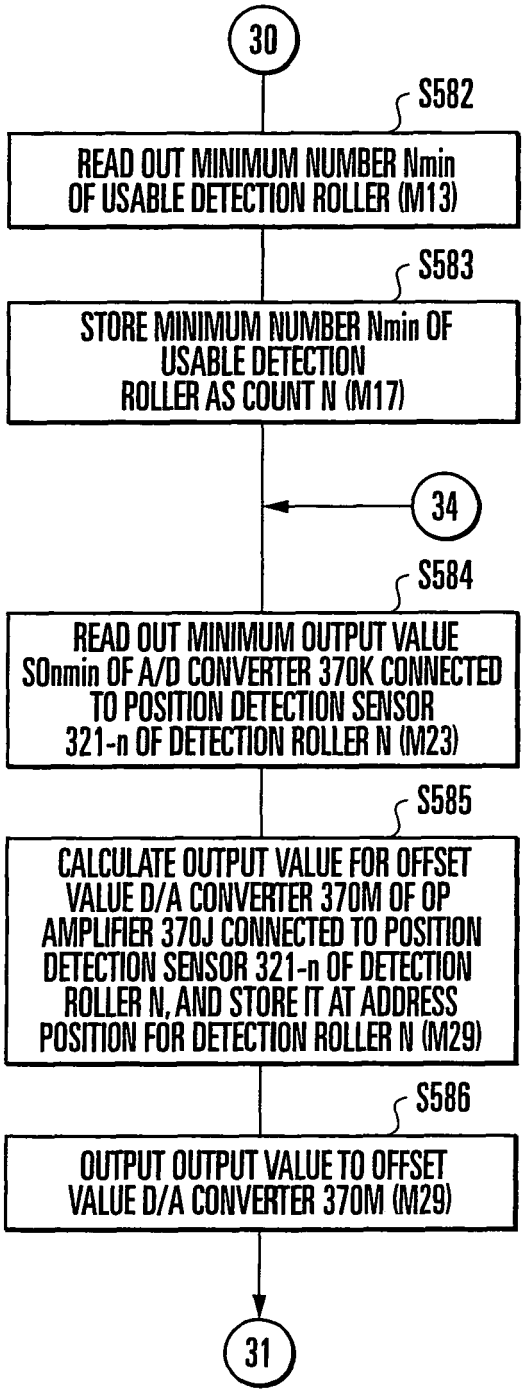

FIG.44M

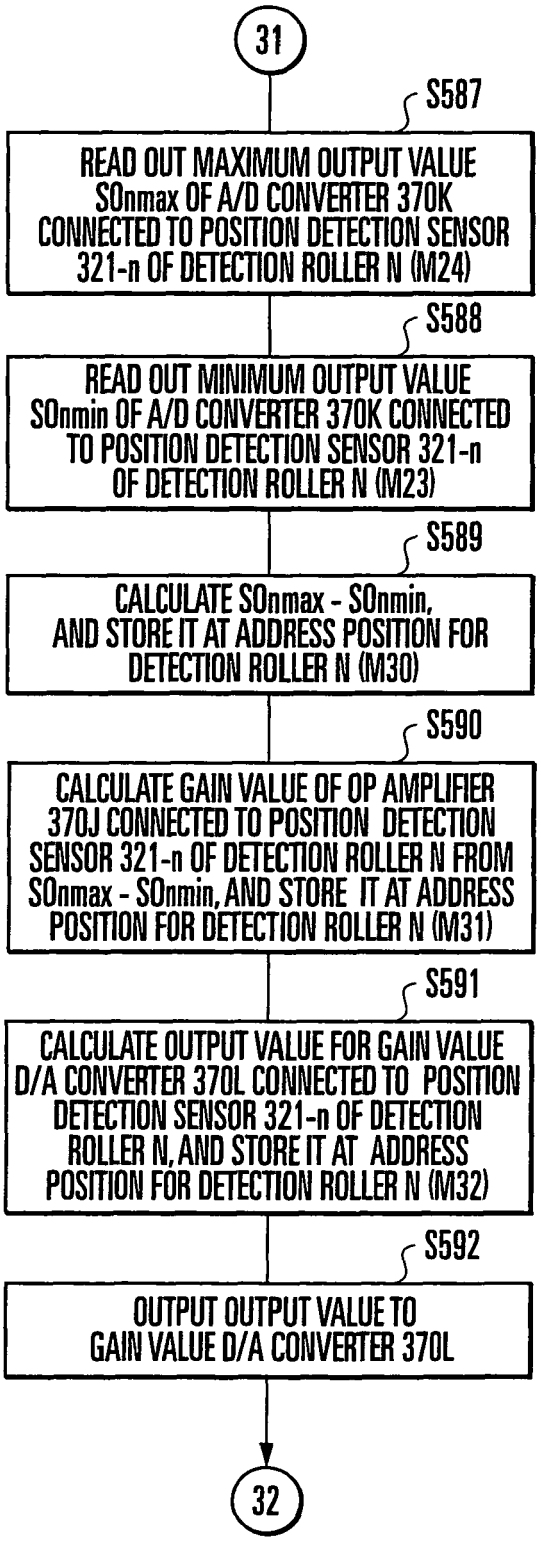

FIG.44N

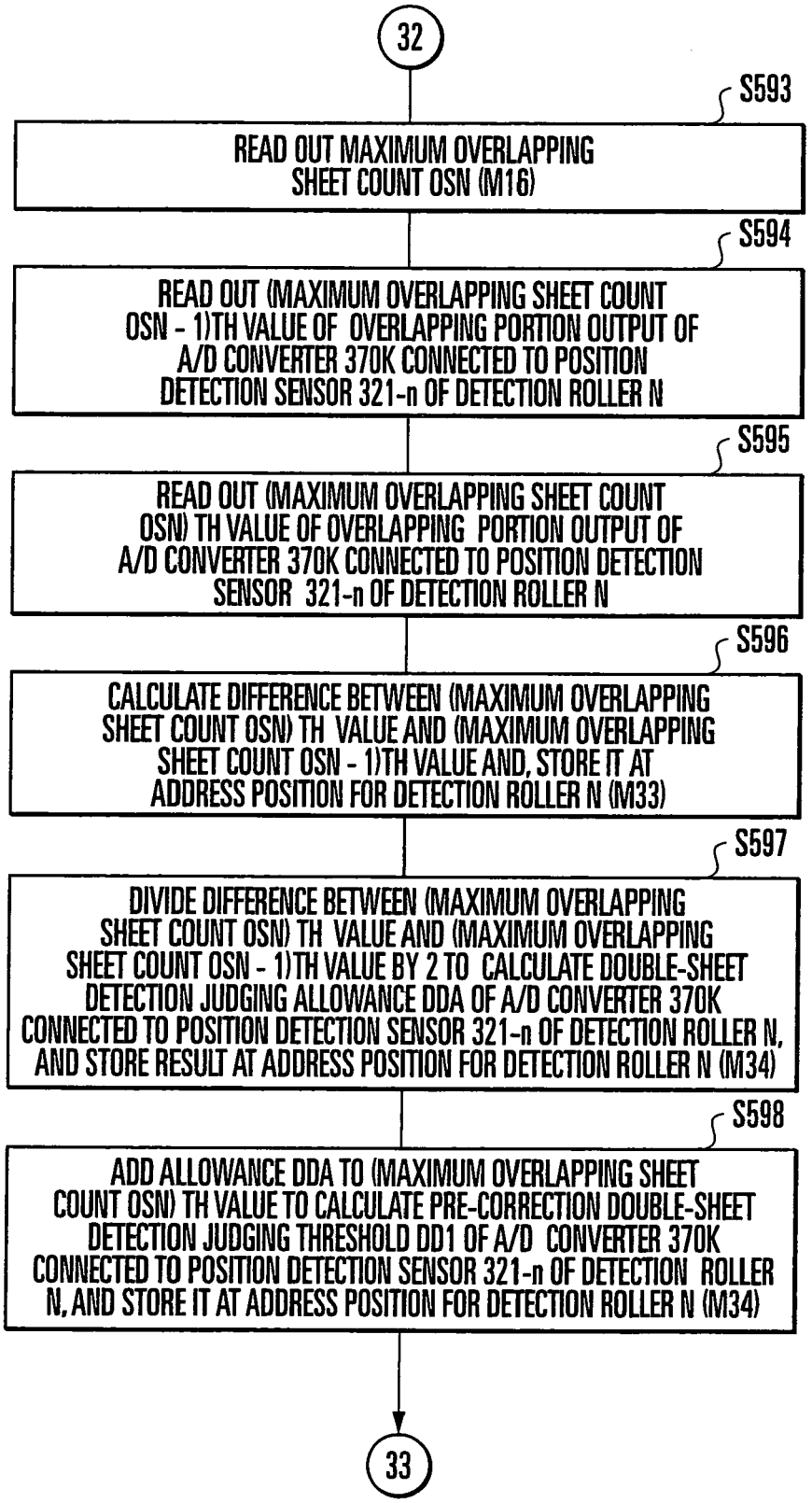
32
S593
READ OUT MAXIMUM OVERLAPPING SHEET COUNT OSN (M16)
S594
READ OUT (MAXIMUM OVERLAPPING SHEET COUNT OSN - 1)TH VALUE OF OVERLAPPING PORTION OUTPUT OF A/D CONVERTER 370K CONNECTED TO POSITION DETECTION SENSOR 321-n OF DETECTION ROLLER N
S595
READ OUT (MAXIMUM OVERLAPPING SHEET COUNT OSN) TH VALUE OF OVERLAPPING PORTION OUTPUT OF A/D CONVERTER 370K CONNECTED TO POSITION DETECTION SENSOR 321-n OF DETECTION ROLLER N
S596
CALCULATE DIFFERENCE BETWEEN (MAXIMUM OVERLAPPING SHEET COUNT OSN) TH VALUE AND (MAXIMUM OVERLAPPING SHEET COUNT OSN - 1)TH VALUE AND, STORE IT AT ADDRESS POSITION FOR DETECTION ROLLER N (M33)
S597
DIVIDE DIFFERENCE BETWEEN (MAXIMUM OVERLAPPING SHEET COUNT OSN) TH VALUE AND (MAXIMUM OVERLAPPING SHEET COUNT OSN - 1)TH VALUE BY 2 TO CALCULATE DOUBLE-SHEET DETECTION JUDGING ALLOWANCE DDA OF A/D CONVERTER 370K CONNECTED TO POSITION DETECTION SENSOR 321-n OF DETECTION ROLLER N, AND STORE RESULT AT ADDRESS POSITION FOR DETECTION ROLLER N (M34)
S598
ADD ALLOWANCE DDA TO (MAXIMUM OVERLAPPING SHEET COUNT OSN) TH VALUE TO CALCULATE PRE-CORRECTION DOUBLE-SHEET DETECTION JUDGING THRESHOLD DD1 OF A/D CONVERTER 370K CONNECTED TO POSITION DETECTION SENSOR 321-n OF DETECTION ROLLER N, AND STORE IT AT ADDRESS POSITION FOR DETECTION ROLLER N (M34)
33

FIG.440

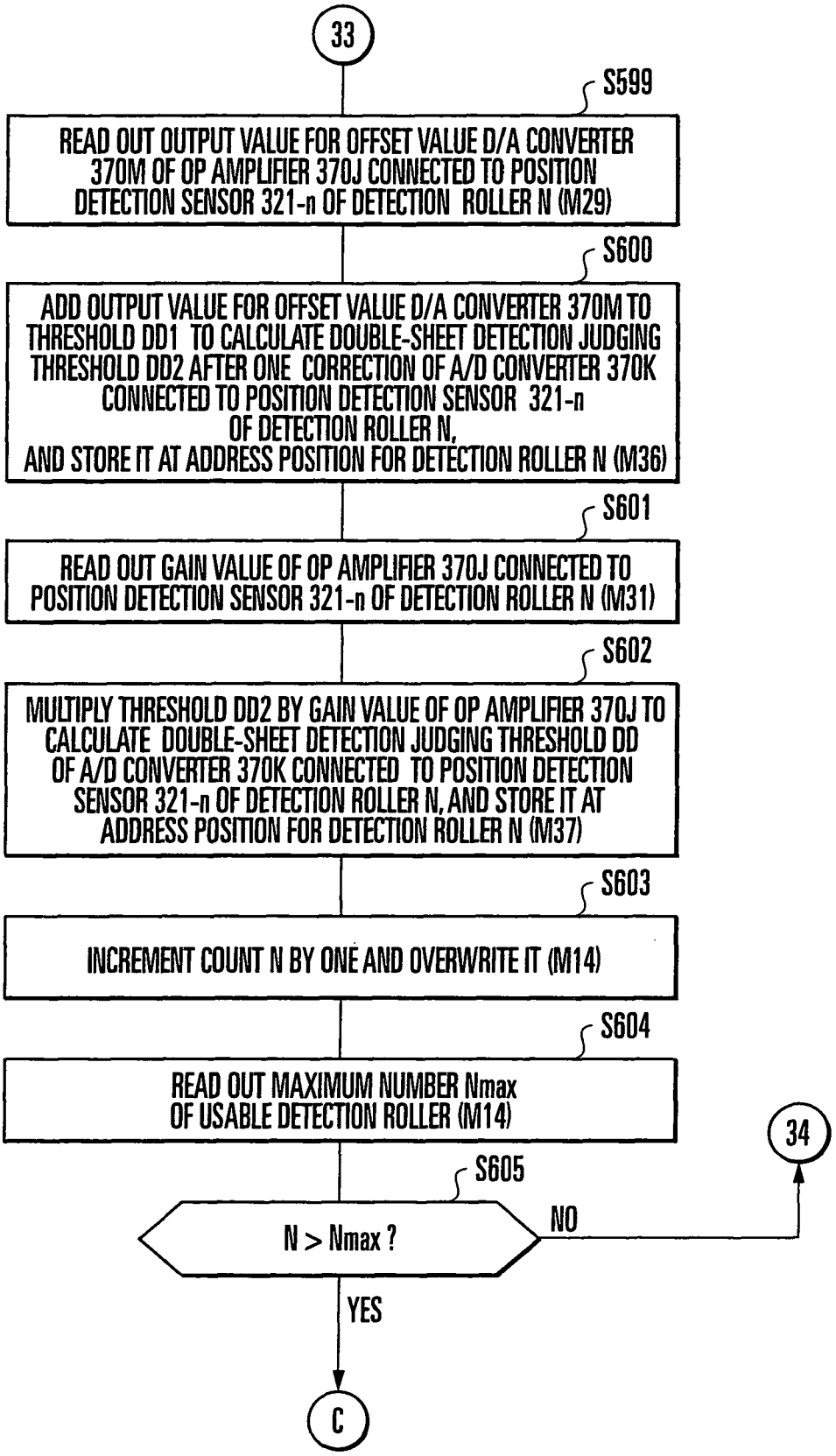
33
S599
READ OUT OUTPUT VALUE FOR OFFSET VALUE D/A CONVERTER 370M OF OP AMPLIFIER 370J CONNECTED TO POSITION DETECTION SENSOR 321-n OF DETECTION ROLLER N (M29)
S600
ADD OUTPUT VALUE FOR OFFSET VALUE D/A CONVERTER 370M TO THRESHOLD DD1 TO CALCULATE DOUBLE-SHEET DETECTION JUDGING THRESHOLD DD2 AFTER ONE CORRECTION OF A/D CONVERTER 370K CONNECTED TO POSITION DETECTION SENSOR 321-n OF DETECTION ROLLER N, AND STORE IT AT ADDRESS POSITION FOR DETECTION ROLLER N (M36)
S601
READ OUT GAIN VALUE OF OP AMPLIFIER 370J CONNECTED TO POSITION DETECTION SENSOR 321-n OF DETECTION ROLLER N (M31)
S602
MULTIPLY THRESHOLD DD2 BY GAIN VALUE OF OP AMPLIFIER 370J TO CALCULATE DOUBLE-SHEET DETECTION JUDGING THRESHOLD DD OF A/D CONVERTER 370K CONNECTED TO POSITION DETECTION SENSOR 321-n OF DETECTION ROLLER N, AND STORE IT AT ADDRESS POSITION FOR DETECTION ROLLER N (M37)
S603
INCREMENT COUNT N BY ONE AND OVERWRITE IT (M14)
S604
READ OUT MAXIMUM NUMBER Nmax OF USABLE DETECTION ROLLER (M14)
S605
N > Nmax ?
NO
34
YES
C

FIG.44P

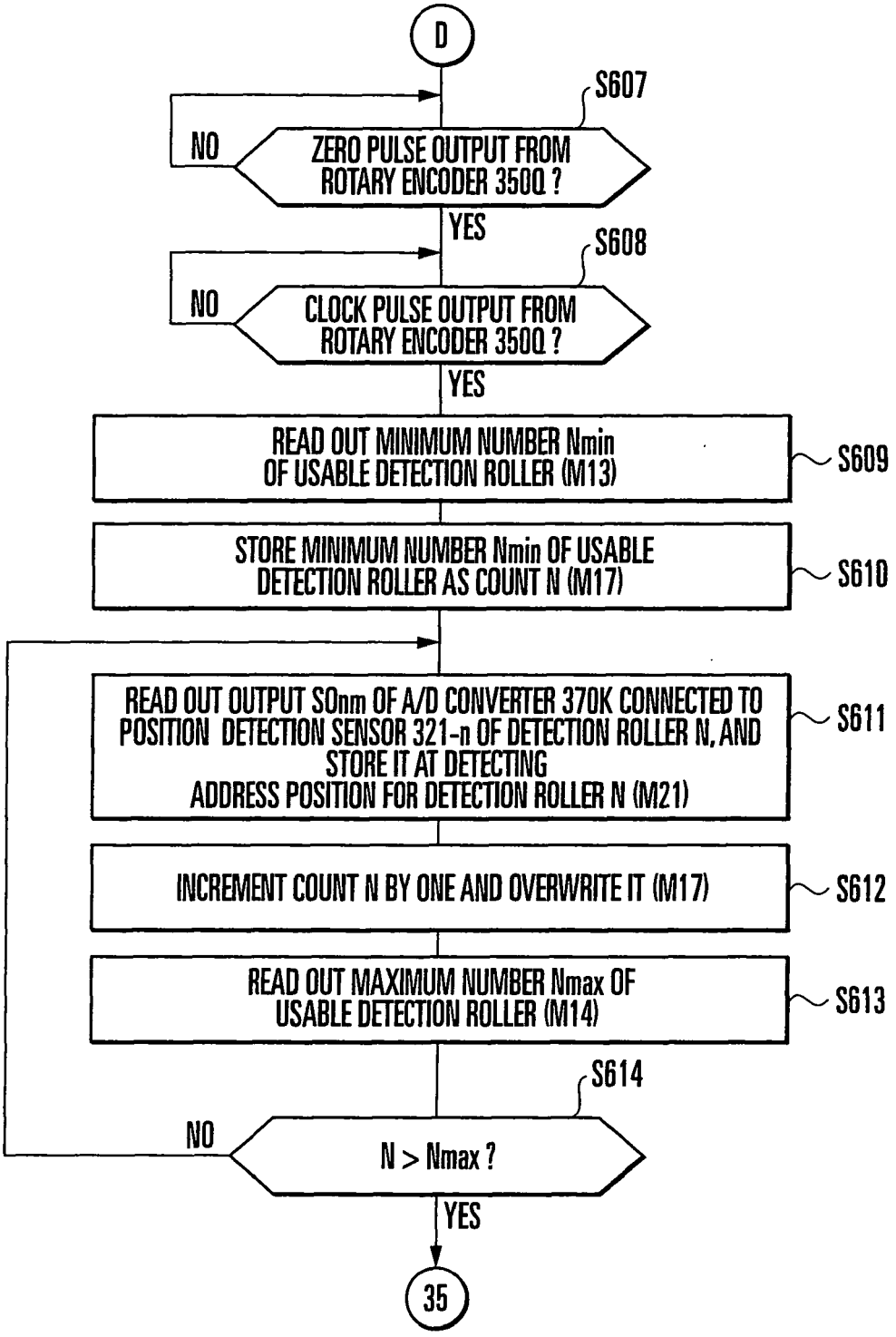
D
S607
NO
ZERO PULSE OUTPUT FROM ROTARY ENCODER 350Q ?
YES
S608
NO
CLOCK PULSE OUTPUT FROM ROTARY ENCODER 350Q ?
YES
READ OUT MINIMUM NUMBER Nmin OF USABLE DETECTION ROLLER (M13)
S609
STORE MINIMUM NUMBER Nmin OF USABLE DETECTION ROLLER AS COUNT N (M17)
S610
READ OUT OUTPUT SOnm OF A/D CONVERTER 370K CONNECTED TO POSITION DETECTION SENSOR 321-n OF DETECTION ROLLER N, AND STORE IT AT DETECTING ADDRESS POSITION FOR DETECTION ROLLER N (M21)
S611
INCREMENT COUNT N BY ONE AND OVERWRITE IT (M17)
S612
READ OUT MAXIMUM NUMBER Nmax OF USABLE DETECTION ROLLER (M14)
S613
S614
NO
N > Nmax ?
YES
35

FIG.44Q

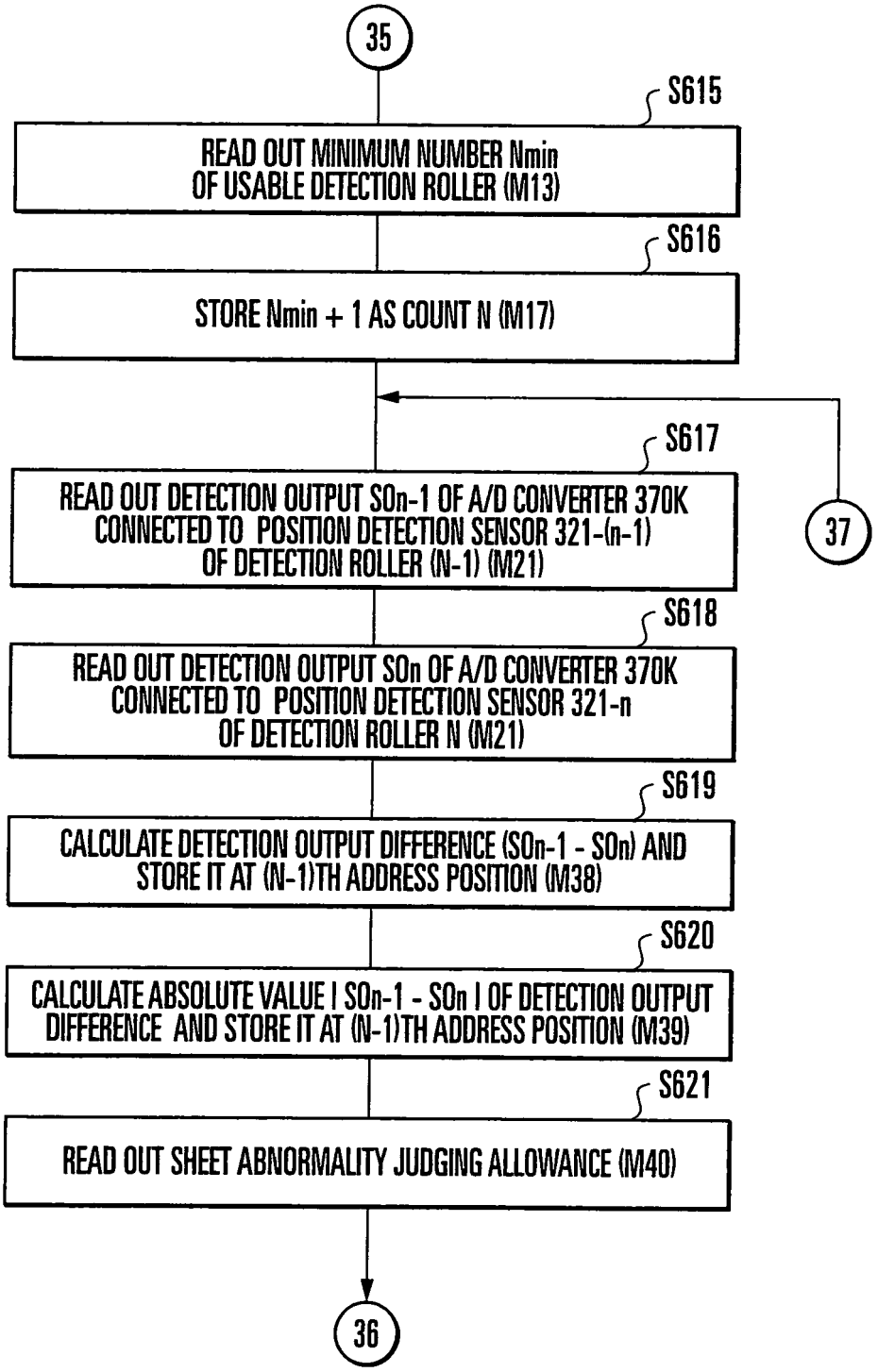
35
S615
READ OUT MINIMUM NUMBER Nmin OF USABLE DETECTION ROLLER (M13)
S616
STORE Nmin + 1 AS COUNT N (M17)
S617
READ OUT DETECTION OUTPUT SOn-1 OF A/D CONVERTER 370K CONNECTED TO POSITION DETECTION SENSOR 321-(n-1) OF DETECTION ROLLER (N-1) (M21)
37
S618
READ OUT DETECTION OUTPUT SOn OF A/D CONVERTER 370K CONNECTED TO POSITION DETECTION SENSOR 321-n OF DETECTION ROLLER N (M21)
S619
CALCULATE DETECTION OUTPUT DIFFERENCE (SOn-1 - SOn) AND STORE IT AT (N-1)TH ADDRESS POSITION (M38)
S620
CALCULATE ABSOLUTE VALUE I SOn-1 - SOn I OF DETECTION OUTPUT DIFFERENCE AND STORE IT AT (N-1)TH ADDRESS POSITION (M39)
S621
READ OUT SHEET ABNORMALITY JUDGING ALLOWANCE (M40)
36

FIG.44R

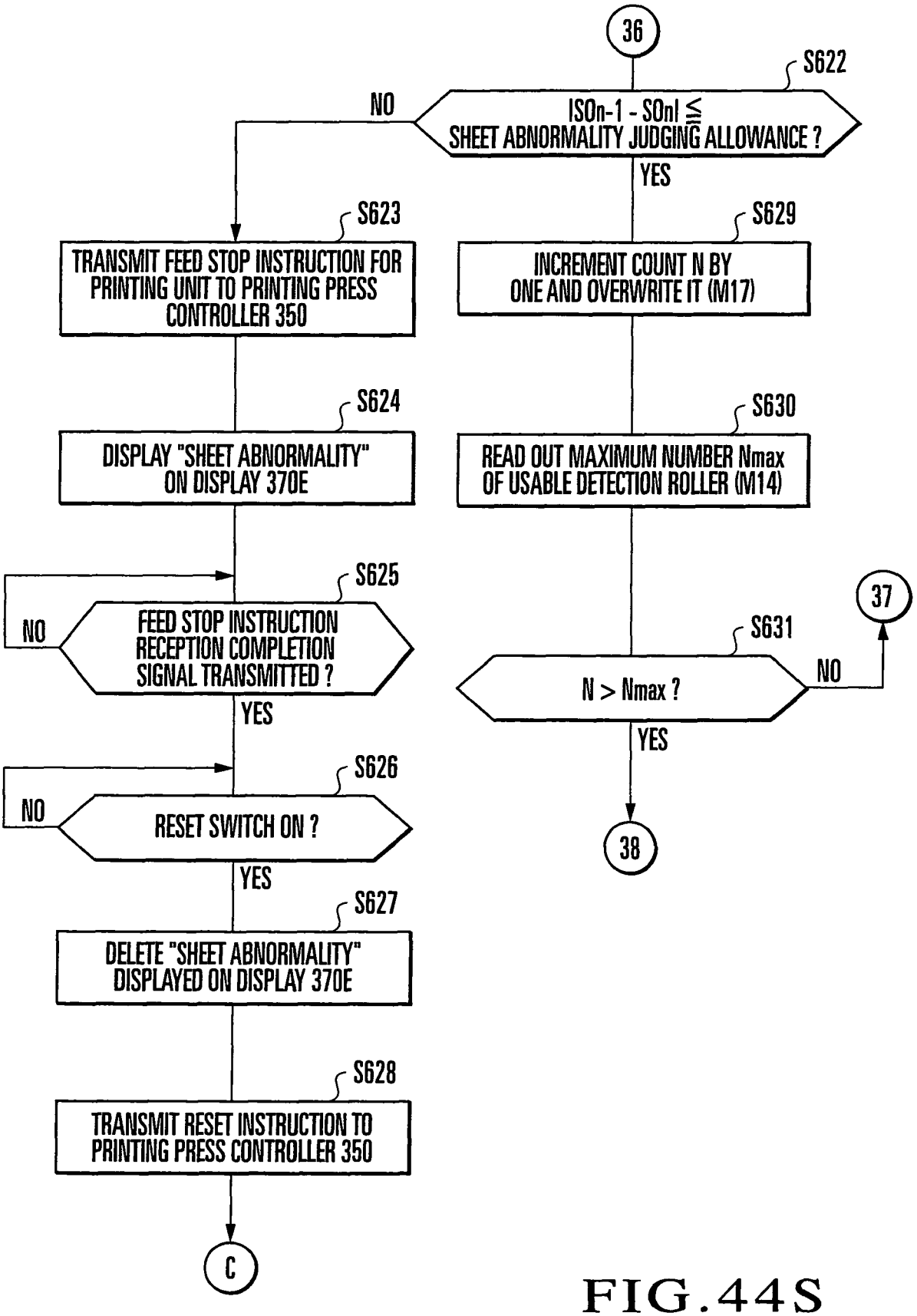
36
S622
ISOn-1 - SOnI ≦ SHEET ABNORMALITY JUDGING ALLOWANCE ?
NO
YES
S623
TRANSMIT FEED STOP INSTRUCTION FOR PRINTING UNIT TO PRINTING PRESS CONTROLLER 350
S624
DISPLAY "SHEET ABNORMALITY" ON DISPLAY 370E
S625
FEED STOP INSTRUCTION RECEPTION COMPLETION SIGNAL TRANSMITTED ?
NO
YES
S626
RESET SWITCH ON ?
NO
YES
S627
DELETE "SHEET ABNORMALITY" DISPLAYED ON DISPLAY 370E
S628
TRANSMIT RESET INSTRUCTION TO PRINTING PRESS CONTROLLER 350
C
S629
INCREMENT COUNT N BY ONE AND OVERWRITE IT (M17)
S630
READ OUT MAXIMUM NUMBER Nmax OF USABLE DETECTION ROLLER (M14)
S631
N > Nmax ?
NO
YES
37
38

FIG.44S

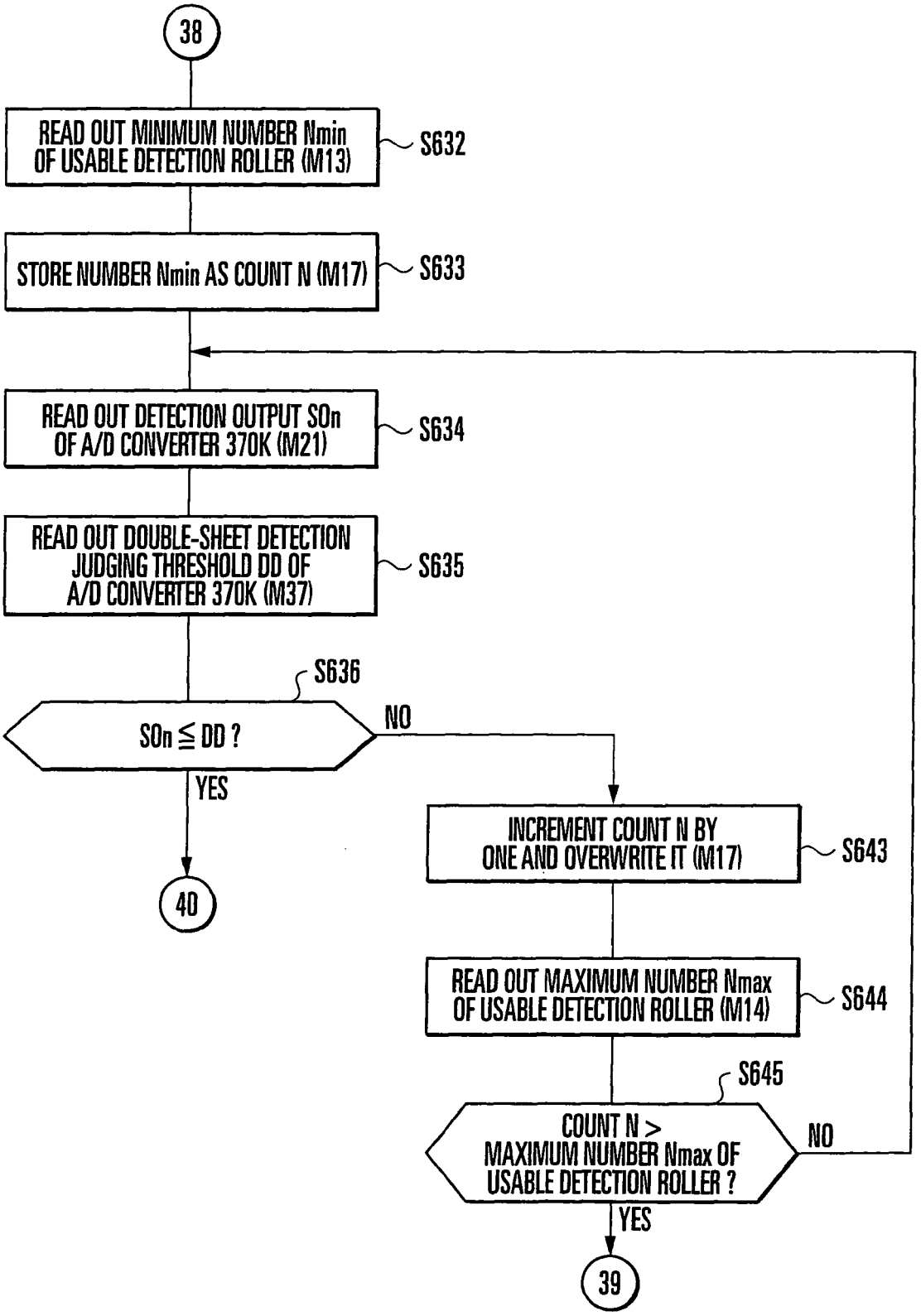
38
READ OUT MINIMUM NUMBER Nmin OF USABLE DETECTION ROLLER (M13)
S632
STORE NUMBER Nmin AS COUNT N (M17)
S633
READ OUT DETECTION OUTPUT SOn OF A/D CONVERTER 370K (M21)
S634
READ OUT DOUBLE-SHEET DETECTION JUDGING THRESHOLD DD OF A/D CONVERTER 370K (M37)
S635
S636
SOn ≦ DD ?
NO
YES
40
INCREMENT COUNT N BY ONE AND OVERWRITE IT (M17)
S643
READ OUT MAXIMUM NUMBER Nmax OF USABLE DETECTION ROLLER (M14)
S644
S645
COUNT N > MAXIMUM NUMBER Nmax OF USABLE DETECTION ROLLER ?
NO
YES
39

FIG.44T

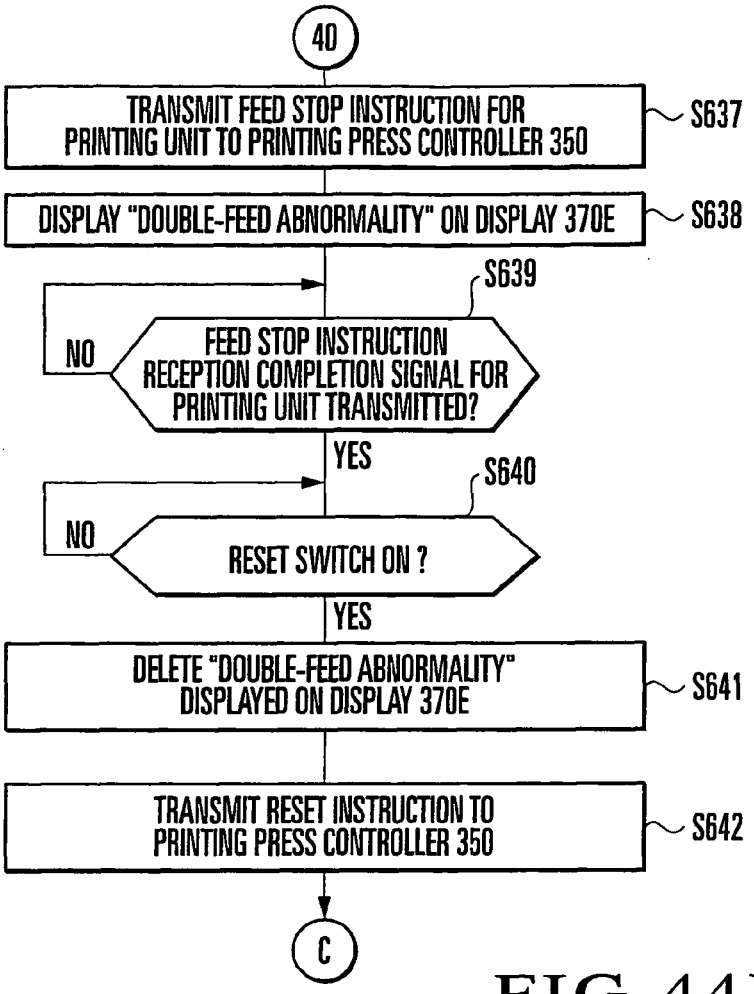

FIG.44U

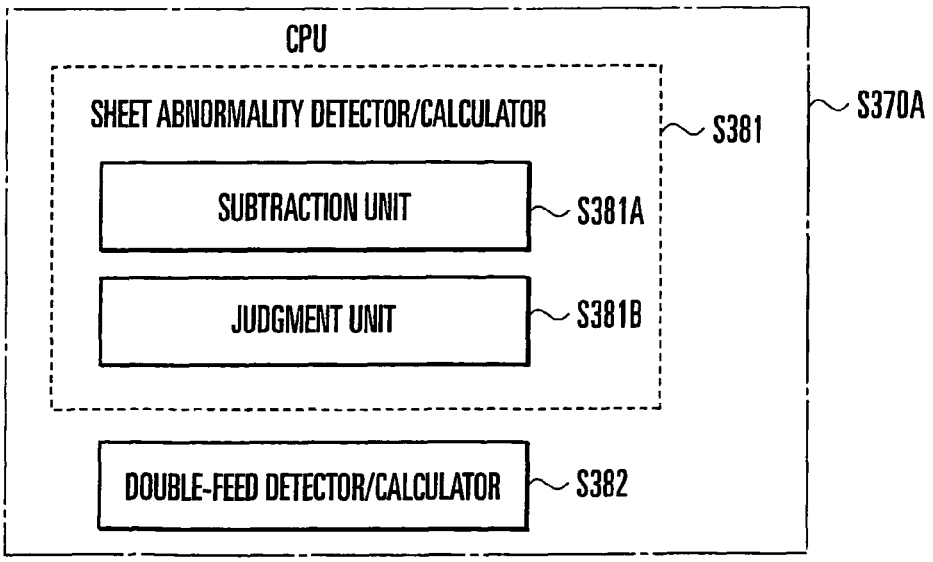

FIG.45

REFERENCES CITED IN THE DESCRIPTION

This list of references cited by the applicant is for the reader's convenience only. It does not form part of the European patent document. Even though great care has been taken in compiling the references, errors or omissions cannot be excluded and the EPO disclaims all liability in this regard.

Patent documents cited in the description

- WO 56158440 A **[0002]**