June 6, 1967 L. M. KELLER 3,323,517

HEATING AND VIBRATING DEVICE

Filed Dec. 8, 1965 2 Sheets-Sheet 1

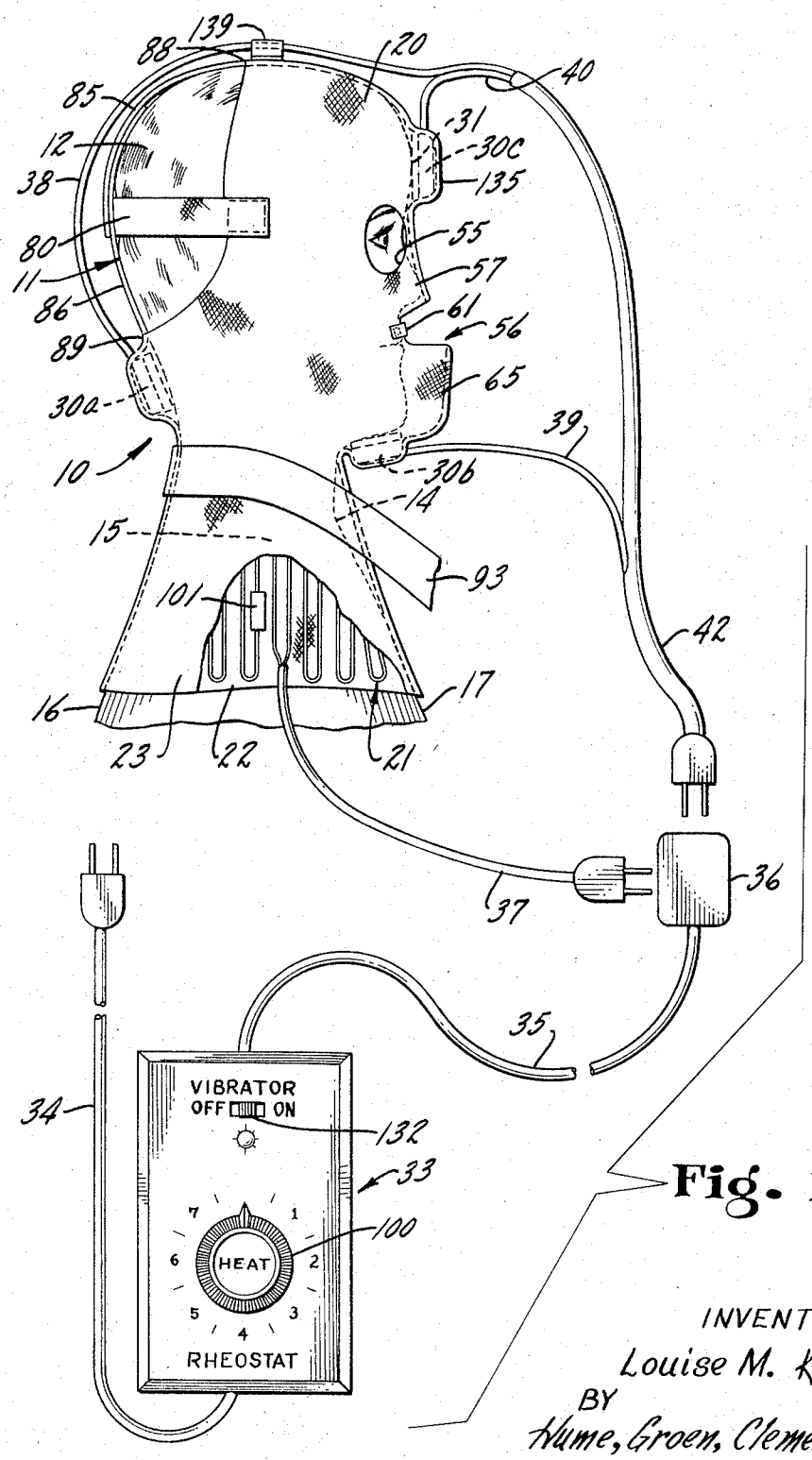

Fig. 1

INVENTOR.
Louise M. Keller
BY
Hume, Groen, Clement & Hume
ATTORNEYS

June 6, 1967 L. M. KELLER 3,323,517

HEATING AND VIBRATING DEVICE

Filed Dec. 8, 1965 2 Sheets-Sheet 2

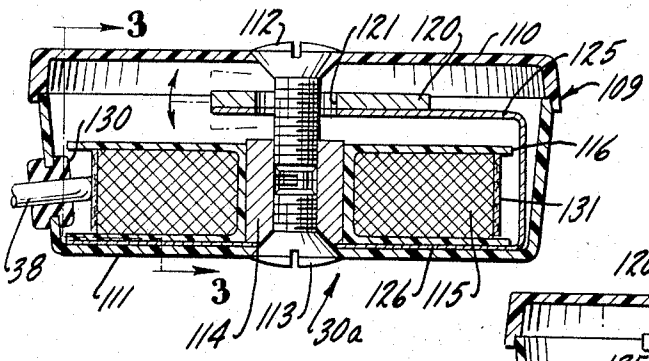

Fig. 2

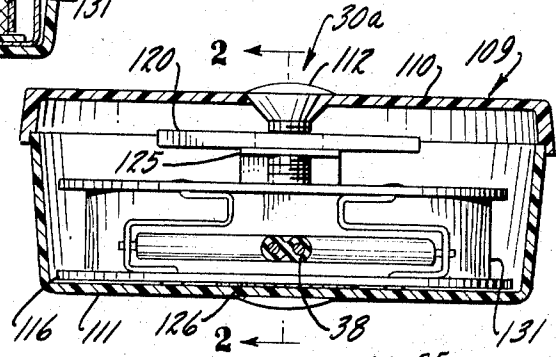

Fig. 3

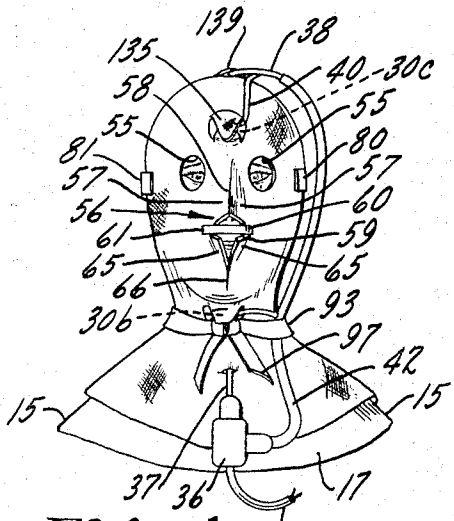

Fig. 4

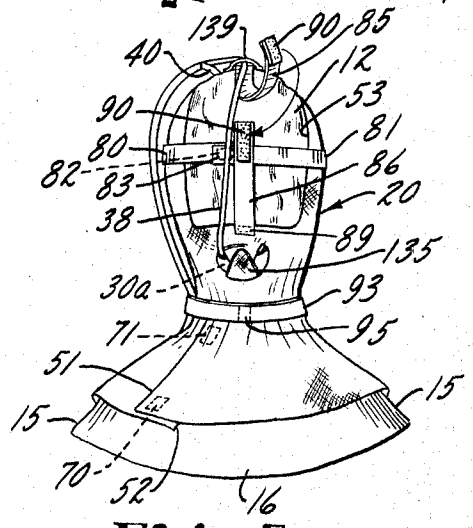

Fig. 5

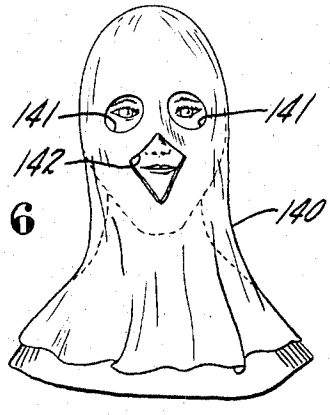

Fig. 6

INVENTOR.
Louise M. Keller
BY
Hume, Groen, Clement, & Hume
ATTORNEYS

United States Patent Office 3,323,517 Patented June 6, 1967

3,323,517

HEATING AND VIBRATING DEVICE

Louise M. Keller, 223 W. 55th St.,
Clarendon Hills, Ill. 60514

Filed Dec. 8, 1965, Ser. No. 512,402
1 Claim. (Cl. 128—24.1)

This invention relates in general to administering heat treatment and vibratory massage to a person for therapeutic purposes or merely for inducing relaxation or the like. The invention deals particularly with a device for administering combined heat treatment and vibratory massage to the head, neck, and upper torso region of a person.

It is an object of the present invention to provide an improved device for treating the head, neck, and upper torso region of a person, including the eyes, sinus region, ears, throat, and cervical spine, with heat and vibratory massage.

It is another object to provide an improved heat treatment and massage device which is simpler and more effective than those presently utilized for broadly similar treatment.

It is still another object to provide a device which effectively administers heat and vibratory massage treatment for therapeutic effect as either a damp or dry heat applicator, with or without the combined application of ointments or the like or purely for inducing relaxation.

It is yet another object to provide a device which assures more effective vibratory massage, coupled with heat treatment.

It is a further object to provide a device of the aforedescribed character which is simply and effectively controlled from readily accessible control means.

The foregoing and other objects are realized in accord with the present invention by providing a new and improved head and shoulder cover device containing heating elements and strategically positioned vibrating elements. The head and shoulder cover device includes a liner and an outer pad. The liner prevents damage to the outer pad by ointment and the like, if such is used in therapy, for example, while the pad contains the heating and vibrating elements and can be used without the liner.

The cover device simply and effectively encases all strategic parts of the head, neck, and shoulders, including upper back and chest, while permitting unrestricted vision and breathing to the person using the device. The head and shoulder device is constructed according to the present invention so that it readily adapts to various head sizes and configurations while assuring that the heating and vibrating equipment is properly positioned. Control means afford simple control of the massage and heat being administered by the device.

The invention, both as to its organization and method of operation, taken with further objects and advantages thereof, will best be understood by reference to the following drawings, in which:

FIGURE 1 is an elevational view of a device embodying features of the present invention, in operational position on the head and shoulder region of a person;

FIGURE 2 is a sectional view through one of the vibratory elements in the device, taken along line 2—2 of FIGURE 3;

FIGURE 3 is a sectional view through the vibrating element of FIGURE 2, taken along line 3—3 thereof;

FIGURE 4 is a front elevational view of the device in operational position on a person;

FIGURE 5 is a rear-elevational view of the device as seen in FIGURE 4; with one of the attaching flaps open in illustration; and

FIGURE 6 is a front elevational view of the devices liner in operational position prior to the heating and vibrating pad being placed over it.

Referring now to the drawings, and particularly to FIGURE 1, a device embodying features of the present invention is seen generally at **10** in operational relationship covering the head and shoulder region of a person or patient, indicated generally at **11**. The device **10** provides heat and vibratory massage treatment to portions of the head **12**, neck **14**, shoulders **15**, upper back **16**, and upper chest **17**.

The device **10** might be utilized merely to administer relaxing heat and vibratory massage to overcome fatigue, for example, or it might be utilized in the actual therapeutic treatment of the sick. In the latter case, heat application and vibratory massage of the sinus regions of a patient's face are readily effected. Other areas of a patient's head and shoulder region, including the cervical spine are also effectively treated. Furthermore, the device may readily be utilized in combination with ointments and the like.

The device **10** embodying features of the present invention includes a pad **20** of light, multi-layer fabric having a serpentine network **21** of resistance heating elements sewed between the inner layer **22** and the outer layer **23** of the fabric throughout its extent. The pad **20** is made in the form of a suitably contoured wrap-around "mask," secured around the head **12**, neck **14**, and shoulders **15**, and over the upper chest **17** and back **16** of a person receiving treatment. The mask pad **20** further has vibrating elements **30***a*, **30***b*, and **30***c*, mounted in it according to the present invention to provide vibratory massage on the cervical spine area of the neck **14**, the front or throat on the neck **14**, and the forehead **31** in the sinus region of the person, respectively.

The heating element network **21** and the individual vibrating elements **30***a*—**30***c* are electrically energized and controlled from a single control module **33**, connected to a suitable source of A.C. current (not shown) by a conventional electrical cord **34**. The module **33** has an outlet cord **35** extending therefrom, terminating in a double entry plug **36**. A conventional plug cord **37** connects the heating element network **21** to the double entry plug **36**, while conductors **38**, **39**, and **40** join together and extend from the vibrating elements **30***a*–**30***c*, respectively, to a single plug cord **42** which also connects with the double plug **36**.

As pointed out, the pad **20** is fabricated into a suitably contoured wrap-around "mask." As seen in FIGURE 5, the mask pad **20** has its opposite ends **51** and **52** overlapped and secured together in back of the head **12** and neck **14** region of the person using the device **10**. The pad **20** is fabricated so that a generally rectangular cutout **53** remains over the upper portion of the back of the head **12** when the pad is in place. This permits air circulation to reach the hair and scalp of the person.

In front of the pad mask **20** with the mask in operational position on a person, suitable eye cutouts **55** are formed to permit unrestricted vision. Immediately below and between the eye cutouts **55** in the front of the mask pad **20** is an aperture complex **56** arranged according to the present invention to provide uninhibited breathing through both the nose and mouth of the person using the device **10**, as well as facilitating the intake of liquids or solids. At the same time, a maximum portion of the face of the person is covered by the pad.

The aperture complex **56** includes a generally vertically disposed, opposed pair of nose flaps **57** defined by a vertical slit **58** in the multi-layer pad material, the vertical slit **58** terminating at its lower end at a horizontal slit **59** calculated to lie immediately below the average person's nose. The slit **59** extends horizontally across the face

of the user below the nose for distance slightly greater than the nose width.

In operational position on a person, the mask pad **20** fits so that the nose flaps **57** lie alongside the nose, covering its sides in unrestricted fashion as illustrated in FIGURE 4, while the person's breathing through the nostrils is unrestrictedly permitted through the now distended horizontal slit **59**. To prevent excessive widening of the opening at the nose, a fabric strap **20** is sewed at **60** on one end of the slit **59**, and releasably secured at the opposite end of the slit **59** to the mask pad with conventional Velcro tape fasteners **61**.

Velcro fasteners are conventional, as pointed out. They comprise opposed patches (**61** in the aforementioned illustration) of tightly packed fiber barbs which cling to each other when pressed against each other and hold the members on which they are mounted tightly together. They can be separated by applying a moderate separation force with the fingers, for example.

Mouth flaps **65** are formed in opposed relationship in the mask pad **20** below the horizontal slit **59**. The flaps **65** are defined on either side of a vertically depending slit **66** which extends from the horizontal slit **59** to a point below where the chin of the normal person is calculated to reside. The flaps **65** are elongated as illustrated in FIGURE 1 and thus cover the chin of a person regardless of its shape or size while permitting free breathing by the person. Spreading the flaps **65** apart horizontally permits access to the mouth for taking liquids, for example, during treatment.

In operational position on the person the opposite free ends **51** and **52** of the mask pad **20** are also held closed by Velcro fasteners **70** and **71**. The fasteners **70** are mounted adjacent the lower edges of the mask ends **51** and **52**, in opposed relationship, as illustrated, while the fastener pads **71** are mounted adjacent the upper edges of the ends **51** and **52**, in opposed relationship. When the mask pad **20** is wrapped around a person's head, the fasteners **70** and **71** are pressed together in conventional fashion and assist in holding the pad **20** in place on the person's head.

Additional attaching means also cross the generally rectangular cutout **53** at the back of the head of the mask **20** to assist in holding the pad in place. These attaching means include a pair of oppositely disposed horizontal straps **80** and **81** attached to the pad on opposite sides of the cutout **53**. The straps **80** and **81** have opposed Velcro fastener pads **82** mounted on their free ends **83**. With the pad **20** in operational position, the straps **80** and **81** are pulled tightly across back of the head of the person and the Velcro pads **82** pressed together to secure the straps.

A vertically disposed pair of straps **85** and **86** are attached to the top of the pad **20** as at **88**, for example, and to the back of the neck of the pad, as at **89**, respectively. These straps **85** and **86** have Velcro fastener pads **90** mounted on their free ends in opposed relationship, as illustrated in FIGURE 5. Pulling the straps **85** and **86** together and pressing the pad **90** against one another further secures the mask pad **20** in place on the person's head.

In addition to the aforedescribed arrangement for fastening the mask pad **20** to a person, an elongated neck strap **93** is secured at **95** adjacent its mid-point, by sewing or the like, to the pad **20** where it normally overlies the back of the neck **44** of the person. The free ends **97** of the strap **93** depend loosely from the attaching point **95** until the pad has been positioned on a person's head in the manner aforedescribed. The straps **93** are then pulled around under the chin of the person and the free ends **97** tied there as illustrated in FIGURE 4, to further hold the mask pad **20** in place.

With the mask pad **20** properly in place on a person, the heating element network **21** covers virtually the entire head, neck, shoulder, upper back and upper chest of the user. By manipulating the conventional rheostatic heat pad control **100** on the control module **33**, the amount of resistance heating effected by the heating element network **21** is easily regulated by the user to achieve a selected temperature. A conventional thermostat **101** in the heating element network **21** prevents the heating elements from heating up over 120° F. so that excess heating is avoided.

As has been pointed out, the vibrating elements **30***a*–**30***c* are also controlled from the module **33**. A typical vibrating element **30***a*, seen in FIGURES 2 and 3, comprises a suitable container **109** formed of plastic and including a cover **110** and a base **111** generally circular in configuration and held together by bolts **112** and **113** extending into opposite ends of an internally threaded sleeve **114** which also serves as the armature of the electro magnectic coil **115**. The electro magnetic coil **115** is mounted on the sleeve **114** in a suitable spool **116**.

Mounted between the spool **116** and the cover **110** of the vibrating element **30***a* is a vibrating mass **120**, which has an enlarged aperture **121** formed adjacent its center encircling the bolt **112**. The mass **120** is transversely elongated and supported on a correspondingly apertured spring arm **125**. The spring arm **125** is generally U-shaped so that it supports the mass **120** on one end and has its opposite end **126** secured between the spool **116** holding the coil **115** and the base **111** of the vibrating element container **109**.

Electrical energy is supplied to the coil **115** in each of the vibrating elements **30***a*–**30***c* through corresponding conductors **38**–**40** in the manner hereinbefore discussed. As seen in FIGURES 2 and 3, the conductor **38**, for example, extends through a rubber grommet **130** in the base **111** of the vibrating element **30***a* into contact with a coil terminal attached to the ends of the wire making up coil **115**. The terminals are insulated from coil **115** by insulating sleeve **131**. Manipulation of the vibrator switch **132** in the control module **133** causes alternating current to be directed to the coil **115** through the conductors **38**–**40**, and the mass **120** to vibrate vertically within the housing. In principle, each vibrating element **30***a*–**30***c* is thus like a simple alternating current buzzer except that no sound emits its mass **120** is free to move unobstructed. Its amplitude is limited only by the spring arm strength. Movement of the mass **120** causes the entire container **109** of the vibrating element **30***a* to vibrate. The weight of mass **120** and spring rate of spring arm **125** are such as to make the natural frequence of the assembly some multiplie of the alternating frequency of the alternating current so as to obtain a maximum amplitude of vibration.

Each of the vibrating elements **30***a*–**30***c* is mounted in the mask pad **20** in identical fashion. Accordingly, only the mounting of the vibrating element **30***c*, best illustrated in FIGURES 1 and 4, is described in detail. Corresponding reference numerals are applied to corresponding parts associated with the mounting of the other vibrating elements **30***a* and **30***b*.

The disc like container **109** of the vibrating element **30***c* sits flat against the fabric of the pad **20** over the forehead **31** of the user, with the cover **110** of the container innermost, as illustrated. Sewed to the face of the pad **20** above, below, and on each side of the properly positioned vibrating element **30***b* are four fastening straps **135**. The free ends of the vertically spaced fastening straps **135** have Velcro fastener pads mounted thereon in opposed relationship, and correspondingly the free ends of the horizontally spaced fastener straps have Velcro fastening pads mounted thereon in opposed relationship. Accordingly, with the vibrating elements **30***c* in properly positioned relationship, the straps **135** are merely pulled tightly over the base of the vibrating element housing and pressed together to releasably secure the vibrating element in place.

As seen in FIGURE 4 also, the neck strap **93** when tied around the front of the person under his chin, also serves to hold the vibrating element **30***b* in place. In this light the cords **39–40** are usually laid alongside the users head **12** and under the tied strap **93** during use. Another Velcro fastener tab strap **139** on top of the mask pad **20** retains the cord **38** as illustrated.

It has been pointed out that the mask pad **20** embodying features of the present invention can readily be used in combination with ointments or the like. When such ointments are used, or for example, if the mask is to be used by a number of people in hospital service, for example, it is often desirable to use a protective liner **140**, as seen in FIGURE 6. The protective liner **140** is nothing more than a head cover formed of polyethelene plastic or the like and having apertures **141** for the eyes and a generally diamond shaped aperture **142** for the mouth and nose of the user. The liner **140** is roughly the same shape as the mask pad **20**, and is wrapped around the head in identical manner and ties in back with a suitable pair of liner ties (not shown). Obviously, ointments or the like will not soak through the plastic to soil the pad **20**.

It will now be recognized that a new and improved heating and vibrating device **10** for the head and shoulder region of the user has been described. It affords readily controllable heat applicable to all pertinent areas of the head, neck, and shoulder of a user. At the same time, massaging vibration is afforded at critical areas of the cervical spine, forehead or sinus region of the person, and front neck. Furthermore, the device **10** is readily adaptable to any size and configuration of head and shoulder area of a using person.

While the embodiment described herein is at present considered to be preferred, it is understood that various modifications and improvements may be made therein, and it is intended to cover in the appended claim all such modifications and improvements as fall within the true spirit and scope of the invention.

What is desired to be claimed and secured by Letters Patent of the United States is:

A therapeutic device for administering heat and vibratory massage to the head and neck area of a person, including the face, chin, shoulders, upper chest and upper back, comprising: a pad adapted to fit around the person's head, said pad shaped so as to extend around the neck and upwardly over the entire face and sides of the person's head, said pad provided with open areas for leaving the back and top rear portion of the head exposed, said pad being provided with portions adapted to depend onto the shoulders and over the upper back and chest of the person, said pad so constructed and arranged for wrapping around the person from the front and overlapping in back of the neck, adjustable strapping means for extending from the back of the neck around underneath the chin to retain the pad snugly under the chin and against the person's throat, adjustable strapping means for extending over the open back of the head for retaining the pad against the person's face, heating means throughout the pad for administering therapeutic heat, and vibrator means in said pad positioned for administering therapeutic vibration, said vibratory means including a plurality of individual vibrating elements, one of said elements being positioned adjacent the base of the back of the person's head, another of said elements being positioned in the pad against the throat of the person under the chin, and a third such element being positioned in the pad over the person's forehead.

References Cited

UNITED STATES PATENTS

2,718,584	9/1955	Hariu	219—46
3,053,250	9/1962	Stubbs	128—41
3,094,118	6/1963	De Besmeetal	128—64 X

FOREIGN PATENTS

466,141	5/1937	Great Britain.
466,489	5/1937	Great Britain.

RICHARD A. GAUDET, *Primary Examiner.*

L. W. TRAPP, *Assistant Examiner.*