(No Model.)

J. R. TEASS.

Straw Cutter.

No. 229,202. Patented June 22, 1880.

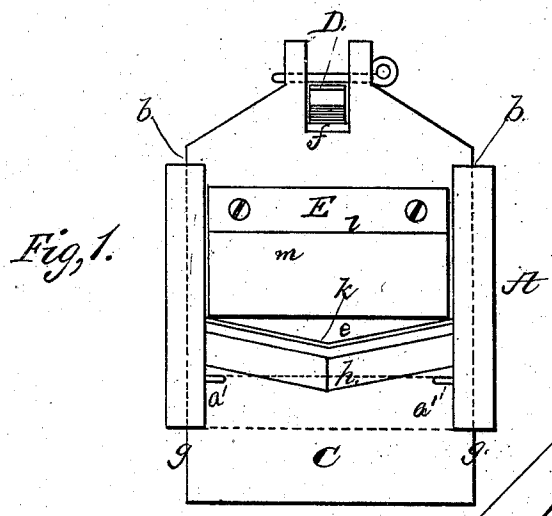

Fig, 1.

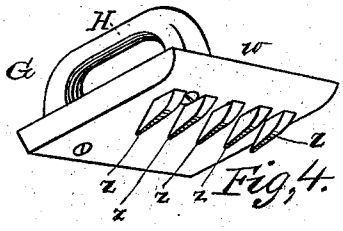

Fig, 4.

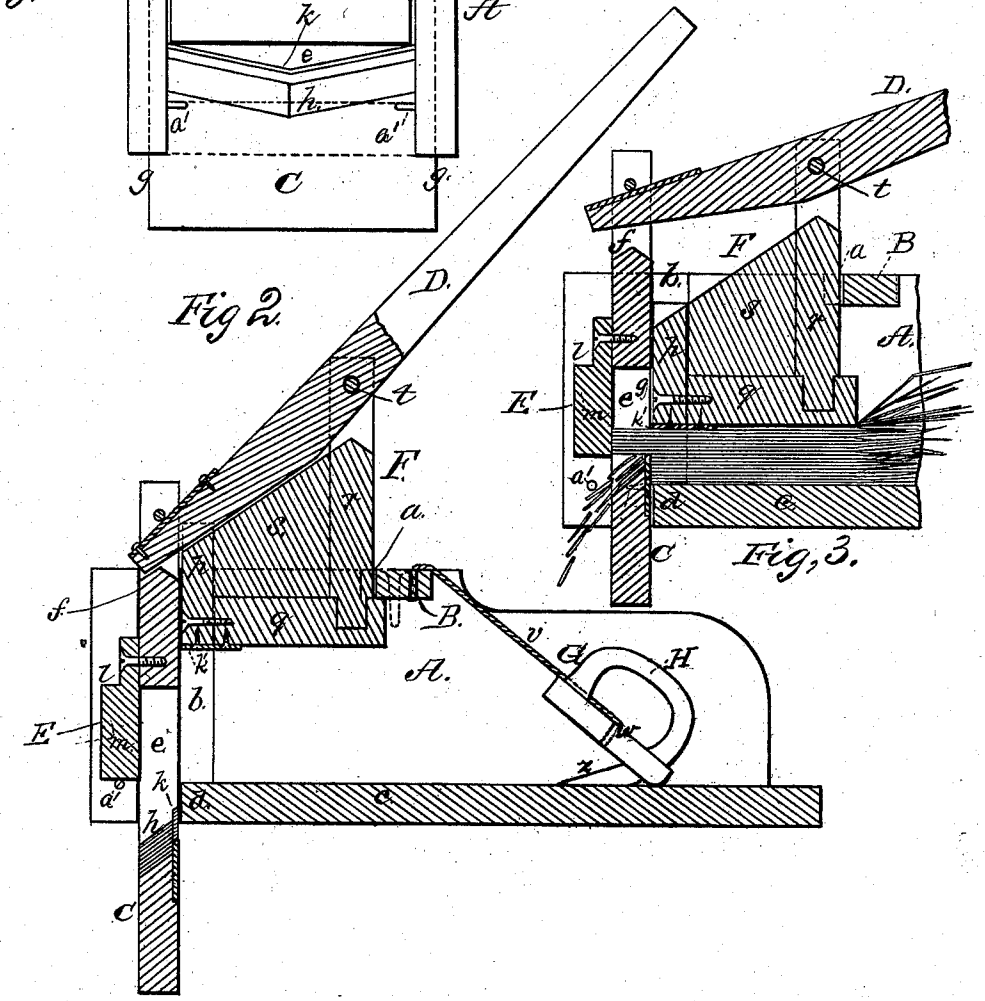

Fig 2.

Fig, 3.

WITNESSES

Villette Anderson.

Frank C. J. Masi.

INVENTOR

John R. Teass,

By E. W. Anderson

his - ATTORNEY

N. PETERS, PHOTO-LITHOGRAPHER, WASHINGTON, D. C.

UNITED STATES PATENT OFFICE.

JOHN R. TEASS, OF ST. ALBANS, WEST VIRGINIA.

STRAW-CUTTER.

SPECIFICATION forming part of Letters Patent No. 229,202, dated June 22, 1880.

Application filed March 31, 1880. (No model.)

To all whom it may concern:

Be it known that I, JOHN R. TEASS, of St. Albans, in the county of Kanawha and State of West Virginia, have invented a new and valuable Improvement in Straw-Cutters; and I do hereby declare that the following is a full, clear, and exact description of the construction and operation of the same, reference being had to the annexed drawings, making a part of this specification, and to the letters and figures of reference marked thereon.

Figure 1 of the drawings is a representation of a front view of my improved straw-cutter. Figs. 2 and 3 are longitudinal vertical sections thereof, and Fig. 4 is a detail.

This invention has relation to feed and straw cutters; and it consists in the construction and novel arrangement of the upwardly-moving angular knife and its centrally open sash-frame, the reversible gage-board, the broad presser-board carrying the metallic plate against which the knife works, the longitudinal lever extending over the middle of the box and working the knife-board and presser-board in opposite directions, and the front and rear guides for the presser-board, all as hereinafter shown and described.

In the accompanying drawings, the letter A designates the box, which may be made with or without supporting-legs. Into the upper edges of its side walls is let a cross-brace, B, at about its middle portion, this cross-brace being provided with a guide-notch, *a*, in its front edge. Near their front edges the side walls of the box are provided with broad guide-grooves *b*, which extend from their upper to their lower edges, to accommodate the cutter and presser, and the bottom *c* of the box projects about half-way across these grooves, as shown at *d*.

C indicates the knife board or frame, which is made with a central opening, *e*, in sash form, having a bearing, *f*, at its top for the front end of the operating-lever D, which extends centrally and longitudinally to the rear over the middle line of the box, as shown in the drawings. This knife-frame has side guides *g*, which work in the front portions of the guide-grooves *b* of the box, these guides being sufficiently extended both above and below, in the latter direction especially, to allow the knife full play in descending below the bottom of the box, as the knife is designed to cut on the upward stroke. The lower margin, *h*, of the opening *e* of the knife-board is made in re-entrant-angular or V form, and beveled downward on the outer lip. The knife *k*, having a cutting-edge of similar angular form, also beveled on its outer side, is secured to the rear of the knife-board, being let into its lower portion and fastened by screws, which may pass through slots in the knife-plate, so as to render it adjustable, if necessary.

To the upper portion of the knife-board is attached the reversible gage-board E, which is formed with an offset, *l*, so that when turned with the projecting portion *m* between the sides of the knife-board it will gage the straw in shorter lengths than when turned with said projecting portion outward. This gage-board is detachable, and may be replaced, when desired, by another of similar form, but having a deeper or shallower offset. The gage-board is usually attached to the knife-board by screws.

F represents the presser-board, having in front an upright guide portion, *p*, which works in the rear portions of the guide-grooves *b*, descending only to the bottom of the box. To this front portion, *p*, is attached a broad horizontal presser-base, *q*, carrying on its front edge the upper knife-plate, K, and having a rear guide-post, *r*, which works in the guide-notch *a* of the cross-bar B, and a strong center-brace, *s*, is placed between this guide-post and the front guide portion, *p*. In the upper portion of the post is arranged a bearing for the lever D, a removable pin, *t*, being usually employed, so that the lever may be easily detached when necessary. By the operation of the lever the presser-board is brought down and the knife-board raised, and the upper knife-plate and lower or shear knife are brought past each other in close cutting contact, the presser-board serving as a fulcrum for lifting the knife-board, while the knife-board also serves as a fulcrum for depressing the presser-board. The single grooves accommodating both sliding frames, enables the knife and knife-plate to be brought close together in the cutting operation.

By a fulcrum-cord, *v*, attached to the cross-

bar B, is connected the feeder-board G, consisting of a broad rectangular board, *w*, having upon its lower inner beveled edge angular teeth *z*, and upon its outer side a handle, H, usually arranged on one side. The cord serves to keep the feeder-board in proper position, and, as a fulcrum, to enable the feed-motion to be made by a twist of the wrist, bringing the teeth on the lower edge forward.

This straw-cutter is easily and cheaply constructed, as its main portions can be made of boards. The operating-lever, being extended back over the middle of the box, is brought into convenient position for the operator, as he can there exert all the necessary pressure to make the upward cut and use the feeding-board without changing his position. As there is no downward pressure on the front part of the box, supporting-legs are not necessary. The box may be rested on another box or any convenient support for operation, and when not in use can be hung up out of the way.

Stops *a'* are arranged on the sides of the box to limit the downward movement of the knife gate or board C, and when this is in its lowest position it serves as a fulcrum for the lever in raising the presser-board, the rear post of the latter, which rests on the straw, serving as the fulcrum for the lever in making the cuts.

Having described this invention, what I claim, and desire to secure by Letters Patent, is—

1. In a straw-cutter, the open center knife-frame having the V-shaped knife at the lower margin of the opening, the reversible gage-board E, extending downward from the upper portion of the knife-frame, and the operating-lever D, pivoted to its top and extending longitudinally over the center of the box, substantially as specified.

2. The box A, having the front guide-grooves, *b*, extending the entire depth of the side walls, the knife-frame C working therein, and the cross-bar B, having the guide-notch *a*, in combination with the reciprocating presser-board F and the common lever D, extending centrally and longitudinally over the box, substantially as specified.

3. The combination, with the box A, having the guides *a b* and stops *a'*, of the open center knife-board, C, carrying an upwardly-cutting knife, *k*, the reciprocating presser-board F, and the lever D, extending longitudinally and centrally over the box, and connected to both knife-board and presser-board, substantially as specified.

4. A straw-cutter having a reciprocating upward-cutting knife, a knife-frame sliding partly below the box-bottom, a reciprocating presser-board, a centrally-arranged lever connected to the tops of the knife-frame and presser-board, and a gage-board attached to the upper portion of the knife-frame, substantially as specified.

5. The combination, with the grooves *b* of the box and the notched cross-bar B, of the reciprocating knife-board and the presser-board, having its front portion, *p*, working in said grooves *b* with the knife-board, its rear post working in the notch of the cross-bar, a center brace, *s*, between its post and front portion, and the common lever pivoted to the said post and knife-board, substantially as specified.

In testimony that I claim the above I have hereunto subscribed my name in the presence of two witnesses.

JOHN R. TEASS.

Witnesses:
J. E. CHILTON,
C. M. HANSFORD.