T. H. THOMPSON & F. W. ARKENBERG.

CARBURETER.

APPLICATION FILED AUG. 26, 1915.

1,181,356. Patented May 2, 1916.

Fig. 1.

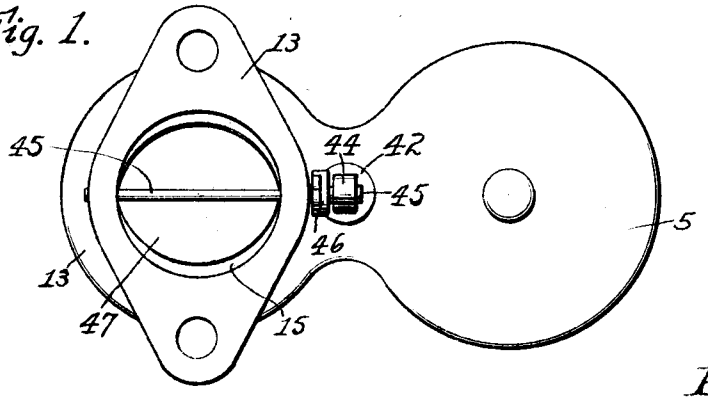

Fig. 2.

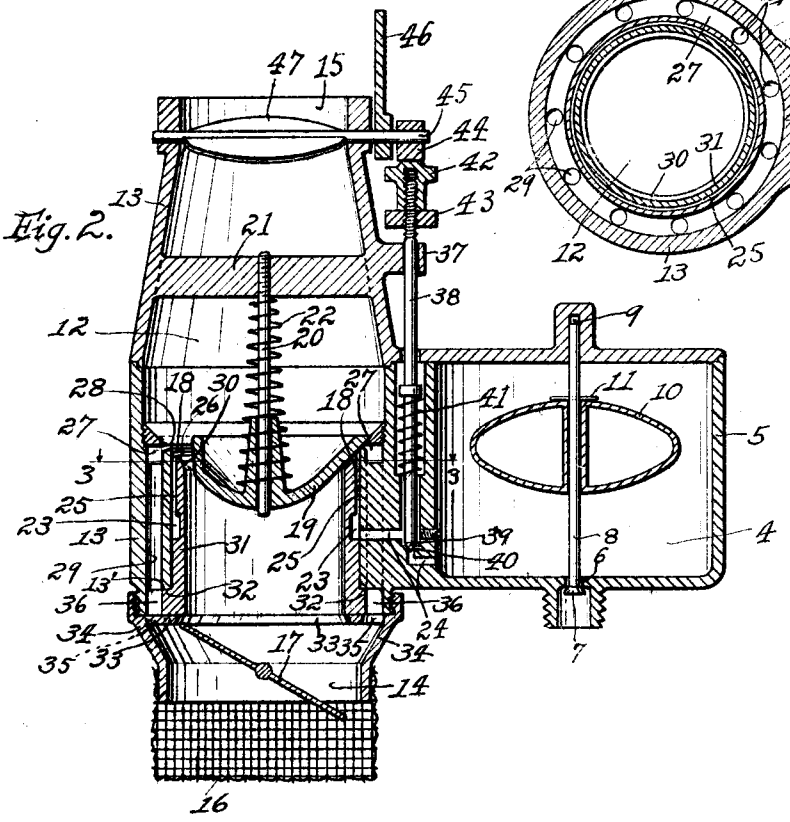

Fig. 3.

WITNESS

J. Danner,

INVENTORS:

Thomas H. Thompson
Fred W. Arkenberg,
BY
Thomas W. Coleon,
ATTORNEY

UNITED STATES PATENT OFFICE.

THOMAS HENDRIX THOMPSON AND FRED W. ARKENBERG, OF MILAN, INDIANA.

CARBURETER.

1,181,356. Specification of Letters Patent. Patented May 2, 1916.

Application filed August 26, 1915. Serial No. 47,456.

To all whom it may concern:

Be it known that we, THOMAS H. THOMPSON and FRED W. ARKENBERG, citizens of the United States, and residents of Milan, in the county of Ripley and State of Indiana, have invented new and useful Improvements in Carbureters, of which the following is a specification.

Our invention relates to carbureters for use with internal combustion engines, and has for its object the provision of a simple and efficient construction of this character for effecting maximum carburetion of air passed therethrough, and for easily and quickly cleaning parts thereof.

Other objects will appear hereinafter.

An exemplification of our invention is shown in the accompanying drawing, forming a part of this specification, and in which—

Figure 1, is a plan view of a carbureter embodying our invention; Fig. 2, is a vertical section of the same; and Fig. 3, is a section taken on line 3—3 in Fig. 2 with the suction operated valve removed.

The preferred form of construction of our invention comprises a fuel chamber having automatic means for maintaining a constant level of fuel therein, and a carbureting chamber in communication with the fuel chamber and provided with manually operable means for controlling the operation thereof. The fuel chamber and the means for controlling the supply of fuel thereto may be of any preferred construction. In the form shown, a fuel chamber 4 is inclosed in a casing or wall 5 having an inlet opening 6 at its bottom and a valve 7 for controlling the passage of fuel through said inlet opening. A valve stem 8 extends upwardly from the valve 7 through the chamber 4 and has its upper end slidably mounted in a guide 9 in the top of the casing 5. A hollow float 10 is mounted on the stem 8 and bears against the under side of a pin 11 which passes through the stem to hold the valve closed when the level of fuel has reached a predetermined height, and to permit the valve to be open when the level of fuel falls below such predetermined height.

Our invention is directed to means for effecting maximum carburetion, the preferred form of which comprises a carbureting chamber 12 inclosed in a wall or casing 13 and having an air intake opening 14 at its bottom and a discharge opening 15 for the carbureted charge at its top. The opening 14 is covered with a screen covering 16 which is adapted to prevent the admission of dirt and the like to the chamber 12, and a butterfly valve 17 is provided in the lower end of the chamber 12 to control the admission of air to the latter. The valve 17 is adapted primarily for restricting the passage of air into chamber 12 to facilitate starting an engine, not shown, to which the carbureter is to be attached in use.

On the inner wall of casing 13 near the normal height of fuel in chamber 4 is formed a valve seat 18, which is adapted to coöperate with a valve 19 slidably mounted on a vertical pin 20 depended from a web 21 formed in the upper portion of the casing 13. Between the web 21 and valve 19 on the pin 20 is a compression spring 22 adapted to press lightly on the valve 19 to facilitate its action and to prevent it from sticking on the pin 20.

Provided in the casing or wall 13 around the chamber 12 and below the valve seat 18, is an annular reservoir 23 which is supplied with fuel from chamber 4 through a passage 24. An annular passage 25 extends upwardly from the reservoir 23 and terminates in a very narrow annular nozzle 26 in valve seat 18 at a position in the latter to be covered by the valve 19 when said valve is resting on its seat 18. The nozzle 26 is disposed slightly higher than the normal fuel level in chamber 4 so that fuel will not run from the nozzle by gravity, and at a height so that a vacuum in chamber 12, such as is produced by the running of an engine, not shown, to which the carbureter is attached, will raise valve 19 off its seat 18 and draw a very thin sheet of fuel from the nozzle 26.

Encircling the passage 25 in the casing 13 is an annular air chamber 27 having an annular orifice 28 in valve seat 18 concentric with and as close to the nozzle 26 as possible. The orifice 28 is positioned in the valve seat 18 so that it will be covered by the valve 19 when the latter is seated. Air is fed to the chamber 27 through a plurality of passages 29 in casing 13, which have their intake openings just inside of the screen 16. The arrangement is such that when the valve 19 is raised off its seat 18 by the suction of an engine, not shown, a very thin annular sheet of fuel is drawn from the nozzle 26 and an annular sheet of air drawn against each side of the annular sheet of fuel, re-

sulting in a very thorough mixture thereof. This construction also provides means which will permit the use of heavy and slow volatilizing fuels. In order to facilitate volatilizing fuel the inner wall of the casing is cut away at 30 so that the smallest transverse area in chamber 12 is substantially between nozzle 26 and the portion of the valve 19 adapted to cover the nozzle, causing the greatest velocity of the fluids in the chamber at this point.

The chamber 23, passage 25 and nozzle 26 are preferably formed by recessing one of the adjacent walls between the cylindrical bore of the lower portion of casing 13, and a tubular member 31 which is fitted in said cylindrical bore. The tubular member 31 is provided with a peripheral flange 32 at its lower end, which is held against a shoulder 13′ on the lower portion of casing 13 by an inwardly extending flange 33 formed on a cap member 34. The cap member 34 is threaded on the lower end of casing 13, and provides means whereby the member 31 may be easily and quickly removed from its position in the device for cleaning and inspecting the internal fuel passages 23, 24, 25 and 26.

The flange 33 of cap member 34 is provided with a plurality of perforations 35 disposed in a circle around said flange. One of said perforations 35 is shown in full line, and one of said perforations is shown in dotted lines in Fig. 2. The perforations 35 connect the lower portion of chamber 12 with an annular chamber 36 at the bottom of passages 29. With this arrangement, air, upon entering opening 14 of chamber 12, is free to pass through perforations 35, annular chamber 36, passages 29 and annular chamber 27 to the air nozzle 28.

A projection 37 is formed on the outer side of the upper portion of casing 13, and provided with a vertical perforation in which is slidably mounted a valve stem 38. At the lower end of the valve stem 38 is a valve 39, which coöperates with a valve seat 40 formed in passage 24. Valve 39 and its coöperating seat 40 provide means for controlling the passage of fuel through passage 24. A compression spring 41 is provided around stem 38, and adapted to press upwardly on said stem. On the upper end of the valve stem is threaded an adjustable member 42, and a lock nut 43 provided at the lower end of member 42 to lock said member in different positions of adjustment. The member 42 is pressed against a cam 44 through the influence of spring 41. The cam 44 is fixed on a shaft 45 which passes through the upper portion of chamber 12, and is actuated by a manually operated lever 46. The shaft 45 also carries a throttle valve 47. The arrangement is such that when throttle valve 47 closes opening 15 of chamber 12, the highest point of cam 44 is in contact with the member 42, thereby closing, or substantially closing, valve 39. The cam 44 is so cut that, upon opening throttle valve 47, valve 39 will be opened correspondingly to feed a proper quantity of fuel to the fuel nozzle 26.

While we have illustrated and described the preferred form of construction of the invention, we do not desire to be limited to the precise details set forth, but desire to avail ourselves of such variations and changes as come within the scope of the appended claims.

We claim:

1. A carbureter comprising a casing inclosing a carbureting chamber; a valve seat on the inner wall of the casing in said chamber, there being fuel and air discharge openings spaced apart in the valve seat, the fuel opening being adapted to discharge a very thin sheet of fuel into the chamber and the air opening to discharge a sheet of air against one side of the sheet of fuel from the fuel opening; and a valve in the chamber adapted, when raised from its seat, to direct a sheet of air against the other side of the sheet of fuel from the fuel opening.

2. A carbureter comprising a casing inclosing a carbureting chamber; a valve seat on the inner wall of the casing around said chamber, there being substantially concentric annular fuel and air discharge openings in the valve seat, the annular fuel opening being adapted to discharge a very thin tubular column of fuel into said chamber and the annular air opening to discharge a thin annular column of air against the outer side of the column of fuel from the fuel opening; and a valve mounted in said chamber and adapted to direct a sheet of air against the inner side of the column of fuel from the fuel opening.

3. A carbureter comprising a casing inclosing a carbureting chamber; a valve seat on the inner wall of the casing around said chamber, there being substantially concentric annular fuel and air discharge openings in the valve seat, the annular fuel opening being adapted to discharge a very thin tubular column of fuel into said chamber and the annular air opening to discharge a sheet against the outer side of the column of fuel from the fuel opening; and a valve seated on said valve seat in said chamber and closing said fuel and air discharge openings, said valve being adapted, when unseated, to direct air against the inner side of the fuel from the fuel opening.

4. A carbureter comprising a casing having an annular valve seat on its inner wall with an opening through the central portion of the valve seat, there being a fuel nozzle in the valve seat substantially concentric with the opening in the latter, and an air

orifice in the valve seat of larger diameter than and substantially concentric with the fuel nozzle; and a valve normally resting on the valve seat and closing the air orifice, fuel nozzle and opening in the valve seat.

5. A carbureter comprising a casing having an annular valve seat on its inner wall with an opening through the central portion of the valve seat, there being a fuel nozzle in the valve seat substantially concentric with the opening in the latter, and an air orifice in the valve seat of larger diameter than and substantially concentric with the fuel nozzle; a valve resting on the valve seat and closing the air orifice, fuel nozzle and opening in the valve seat; and a spring yieldingly holding the valve on the valve seat, the valve being adapted to open the air orifice, fuel nozzle and opening in the valve seat simultaneously when unseated from said seat.

6. A carbureter comprising a casing having a substantially cylindrical bore in its lower portion and an annular shoulder at the lower end of said cylindrical bore; a tubular member disposed in and slidingly fitting the cylindrical bore of the casing; a flange on the tubular member engaging said shoulder, there being a fuel nozzle opening between the tops of the tubular member and said cylindrical bore; and a cap removably secured to the casing and holding said flange against said shoulder.

7. A carbureter comprising a casing having a substantially cylindrical bore in its lower portion and a shoulder at the lower end of the cylindrical bore, there being an annular air orifice substantially concentric with and at the top of said cylindrical bore in the casing with an air supplying passage leading to the annular orifice; a tubular member fitted in the cylindrical bore and having a flange thereon resting against said shoulder, there being an annular fuel nozzle opening between the tops of the cylindrical bore and the tubular member, a cap removably secured to the casing and holding the flange against said shoulder; and a valve closing the air orifice, fuel nozzle and opening in the tubular member.

8. A carbureter comprising a casing having a substantially clindrical bore in its lower portion and an annular air orifice substantially concentric with and at the top of said cylindrical bore; a tubular member fitted in the cylindrical bore of the casing and having a flange resting against the lower portion of the casing, there being an annular fuel nozzle opening between the tops of the tubular member and the cylindrical bore of the casing and substantially concentric with the annular air orifice; and a cap threaded on the casing and engaging the flange locking the tubular member in the casing, there being air passages through the cap and in the wall of the casing leading from the lower portion of the interior of the casing to said annular air orifice.

9. A carbureter comprising a casing having an annular valve seat on its inner wall with an opening through the central portion of the valve seat, there being a fuel nozzle in the valve seat substantially concentric with the opening in the latter and an air orifice in the valve seat of larger diameter than and substantially concentric with the fuel nozzle with air passages leading from the lower portion of the casing to the air orifice; a valve resiliently held on the valve seat normally closing the fuel nozzle, air orifice and upper end of the opening in the valve seat; and a valve at the lower end of the casing controlling the flow of air to the opening in the tubular member and said air passages simultaneously.

In witness whereof we have signed our names in the presence of two witnesses.

THOMAS HENDRIX THOMPSON.
FRED W. ARKENBERG.

Witnesses:
BINE WHITLATCH,
JAS. A. CONNELLY