July 18, 1961 R. C. PUTMAN, SR 2,992,717

ARTICLE RECEIVING AND STORAGE APPARATUS

Filed Sept. 16, 1958 4 Sheets-Sheet 1

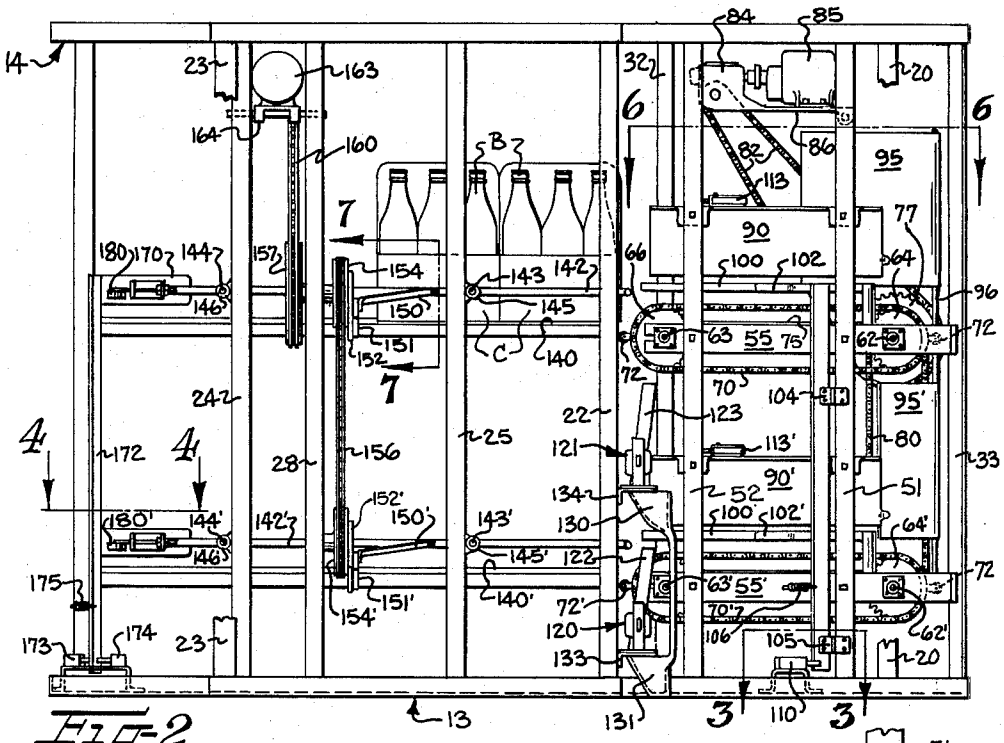

Fig-2

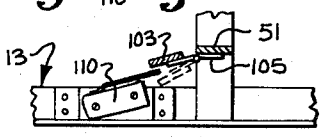

Fig-3

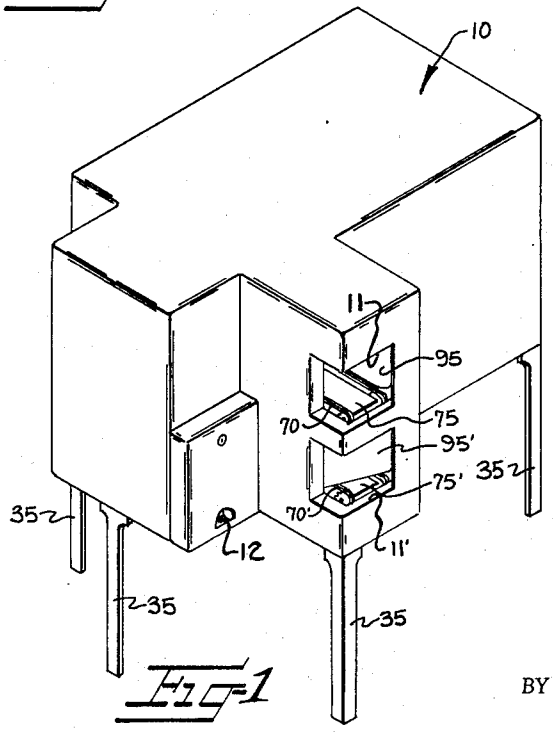

Fig-1

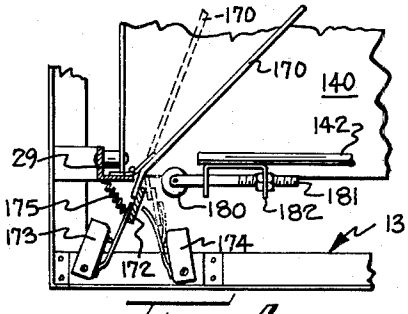

Fig-4

INVENTOR:
RAYMOND C. PUTMAN, SR.

BY Eaton, Bell, Hunt & Seltzer
ATTORNEYS

July 18, 1961 R. C. PUTMAN, SR 2,992,717

ARTICLE RECEIVING AND STORAGE APPARATUS

Filed Sept. 16, 1958 4 Sheets-Sheet 2

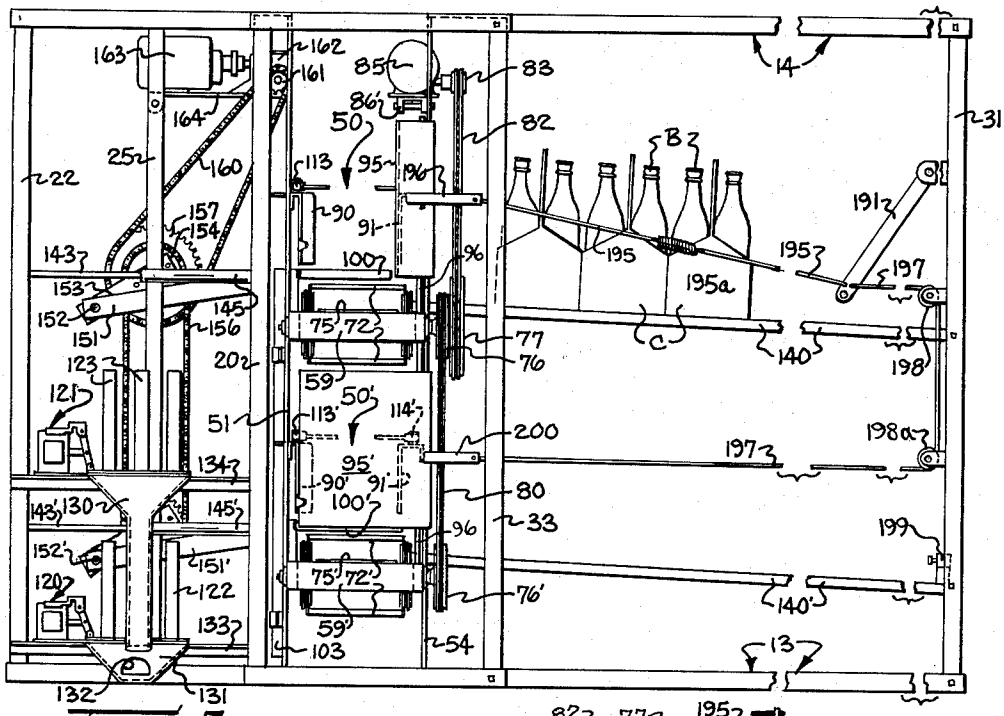

Fig-5

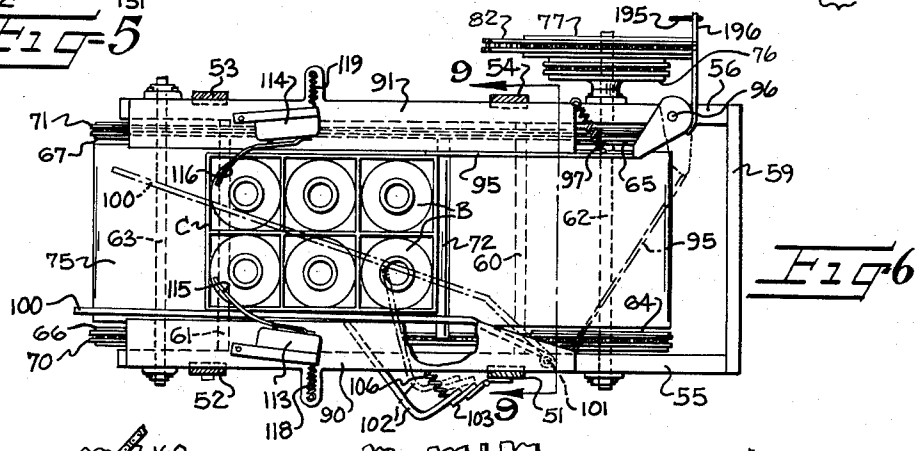

Fig-6

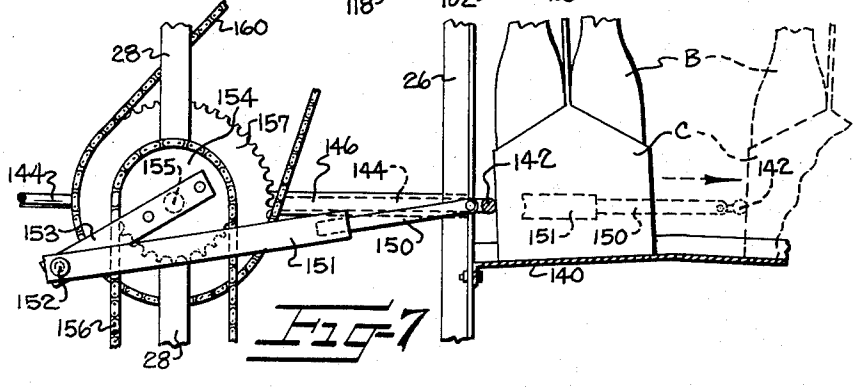

Fig-7

July 18, 1961 R. C. PUTMAN, SR 2,992,717

ARTICLE RECEIVING AND STORAGE APPARATUS

Filed Sept. 16, 1958 4 Sheets-Sheet 3

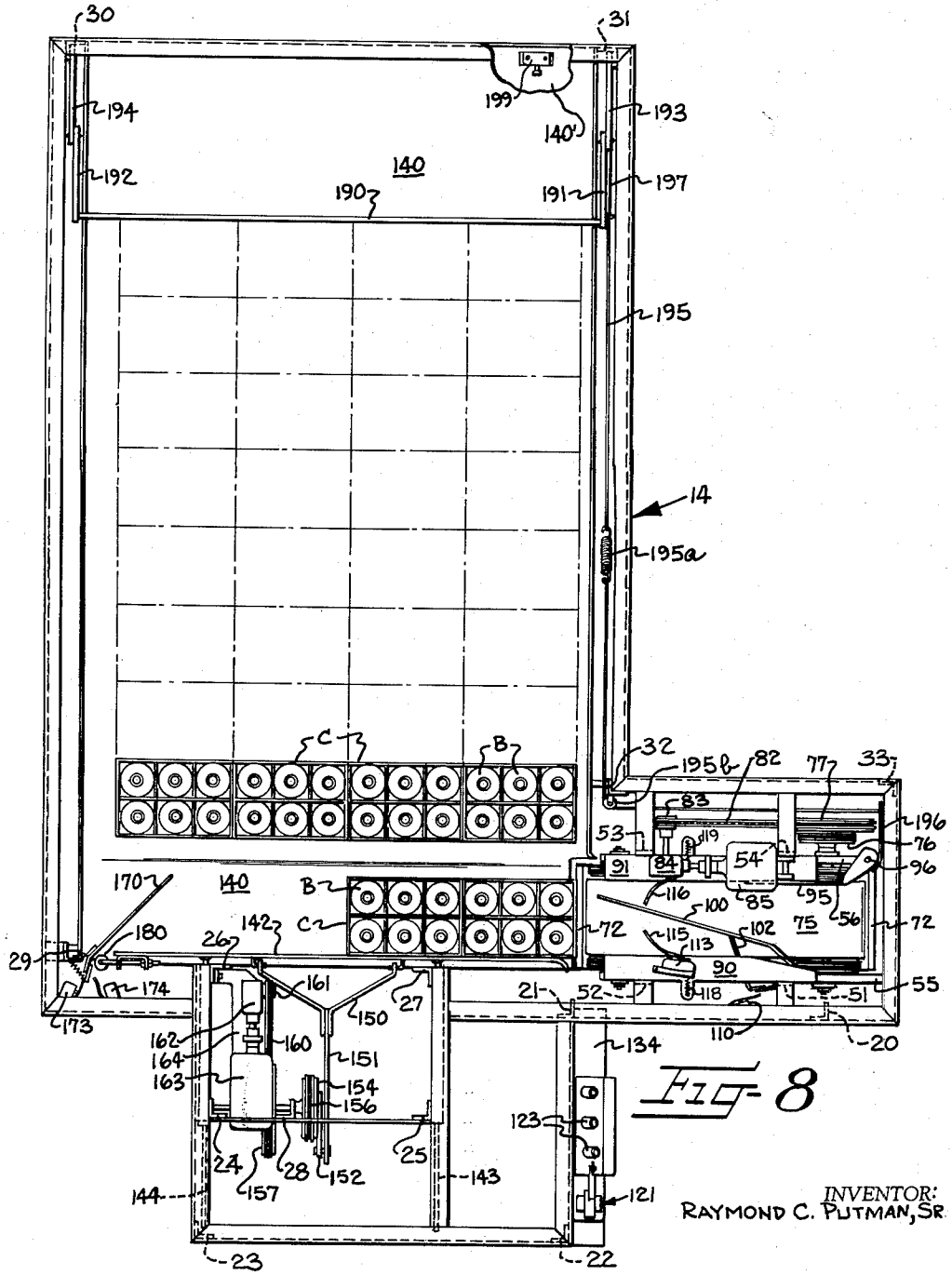

FIG. 8

INVENTOR:
RAYMOND C. PUTMAN, SR.

BY Eaton, Bell, Hunt & Seltzer
ATTORNEYS

July 18, 1961 R. C. PUTMAN, SR 2,992,717

ARTICLE RECEIVING AND STORAGE APPARATUS

Filed Sept. 16, 1958

4 Sheets-Sheet 4

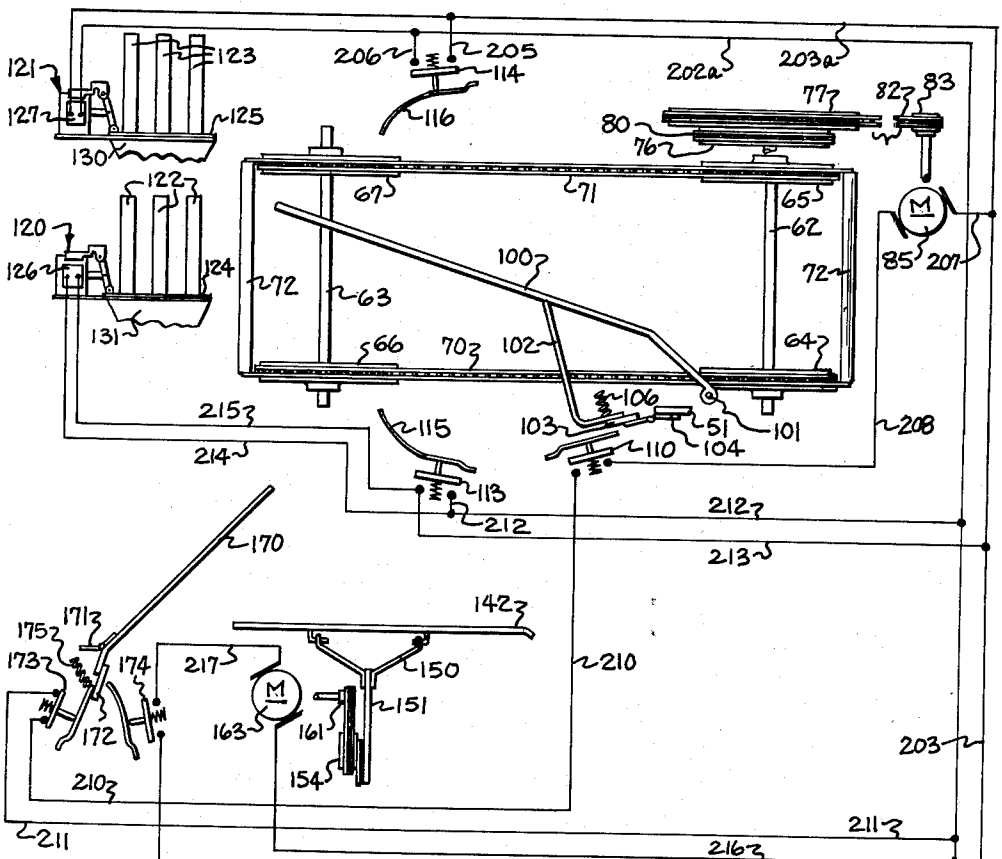

Fig-10

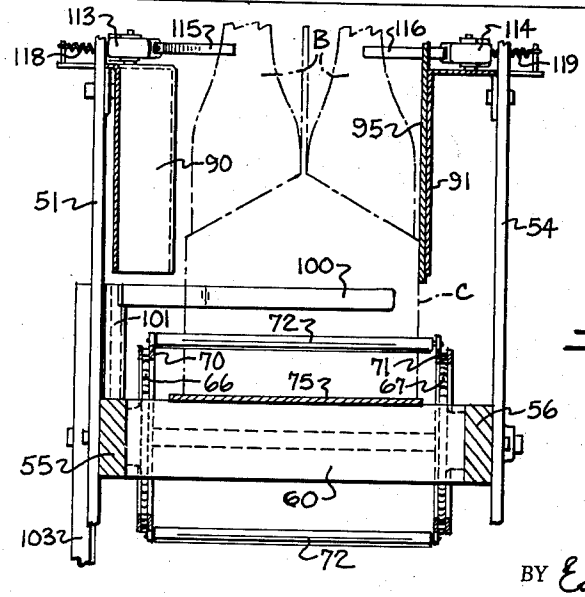

Fig-9

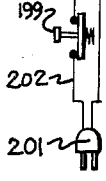

INVENTOR:
RAYMOND C. PUTMAN, SR.

BY Eaton, Bell, Hunt + Seltzer
ATTORNEYS

United States Patent Office 2,992,717 Patented July 18, 1961

2,992,717

ARTICLE RECEIVING AND STORAGE APPARATUS

Raymond C. Putman, Sr., Hickory, N.C., assignor to Taylor Manufacturing Co., Inc., Salisbury, N.C., a corporation of North Carolina

Filed Sept. 16, 1958, Ser. No. 761,409
11 Claims. (Cl. 194—4)

This invention relates generally to an apparatus for receiving and storing articles, particularly cartons of empty soft drink bottles and the like when they are returned to the place of purchase.

At present, when cartons of soft drink bottles and the like are returned to a grocery store or the like, their receipt must be acknowledged by an employee and either a cash refund or a credit slip made. The returned bottles are then temporarily stored in a storage bin located at the front of the store, usually adjacent one of the check-out counters. This acknowledgment of every bottle returned is a time consuming operation and causes delay and inconvenience to the customer if he has to wait any length of time for an employee to return the deposit due on the empty bottles. The bin of empty soft drink bottles is also unsightly at the entrance of a store and there is a possibility of breakage when the bottles are placed in and removed from the bin.

With the foregoing in mind, it is the primary object of this invention to provide an article receiving and storage apparatus provided with means for receiving and automatically storing returned cartons of soft drink bottles with means for automatically reimbursing the customer in accordance with the number of bottles returned.

It is another object of this invention to provide an article receiving and storage apparatus with means for receiving cartons of empty soft drink bottles and means for automatically storing the cartons in an orderly fashion to prevent breakage of the bottles and the bottles will be out of sight of the customers.

It is still another object of this invention to provide an apparatus for receiving and storing cartons of soft drink bottles having carton receiving means for initially receiving and recording the number of bottles received, means for immediately refunding an amount of money corresponding to the number of bottles received, and carton storing means adapted to automatically store the cartons received in an orderly fashion.

Some of the objects of the invention having been stated, other objects will appear as the description proceeds when taken in connection with the accompanying drawings, in which—

FIGURE 1 is an isometric view looking downwardly on the article receiving and storage apparatus;

FIGURE 2 is a greatly enlarged side elevation of the upper portion of the apparatus, looking at the left-hand side of FIGURE 1 and with the supporting legs and cover removed;

FIGURE 3 is an enlarged fragmentary horizontal sectional view taken substantially along the line 3—3 in FIGURE 2;

FIGURE 4 is an enlarged fragmentary horizontal sectional view taken substantially along the line 4—4 in FIGURE 2;

FIGURE 5 is an enlarged front elevation of the upper portion of the apparatus, looking at the front of FIGURE 1 and with the supporting legs and cover removed;

FIGURE 6 is an enlarged fragmentary horizontal sectional view taken substantially along the line 6—6 in FIGURE 2;

FIGURE 7 is an enlarged fragmentary vertical sectional view taken substantially along the line 7—7 in FIGURE 2;

FIGURE 8 is a plan view of the apparatus with the cover removed;

FIGURE 9 is an enlarged fragmentary vertical sectional view taken substantially along the line 9—9 in FIGURE 6;

FIGURE 10 is a schematic electrical diagram to illustrate the operation of the apparatus and the various parts associated with the electrical circuit.

Referring to the drawings, the dispensing device is provided with a suitable cover 10 (FIGURE 1), preferably, formed of sheet metal with a first or upper carton receiving opening 11 and a second or lower article receiving opening 11'. The cover 10 is also provided with a coin return opening 12 in which coins are deposited upon receipt of a carton C which is filled or partially filled with bottles B. The cover 10 may be of any suitable construction and is adapted to fit over and enclose a built-up frame comprising a lower horizontally disposed frame or base broadly indicated at 13 and an upper horizontally disposed frame or base broadly indicated at 14 (FIGURES 2, 5 and 8). The lower frame 13 of the same configuration as the upper frame 14 (FIGURE 8) and in this instance the lower and upper frames are constructed of angle iron members suitably secured together as by welding, it being understood that any other type frame may be provided.

The lower and upper frames are supported in spaced apart relationship by a plurality of vertically extending support posts 20 through 33 (FIGURE 8). In order to position the carton receiving openings 11 and 11' and the deposit returning opening 12 at a convenient height, the apparatus is provided with downwardly depending legs indicated at 35 (FIGURE 1) the upper ends of which are suitably secured to the lower frame 13.

The apparatus is shown having an upper carton receiving and storage station and a lower carton receiving and storage station which are substantially identical to each other and therefore only one, in this case the upper station, will be described in detail with like parts of the lower station bearing like reference characters with the prime notation added. It is to be understood that the size of the apparatus may be varied to accommodate a greater or lesser number of bottles and cartons, depending upon the number returned to a particular place of purchase. For instance, a small store might require a machine having only a single receiving and storage station and a large self-service grocery store might require a machine having more than two receiving and storage stations to increase the amount of storage and number of cartons the machine will accommodate before it is filled to capacity.

Carton receiving stations

The upper and lower carton receiving stations are indicated broadly at 50 and 50' respectively, and both of the carton receiving stations are supported on vertically extending support posts 51 through 54 (FIGURE 8). The posts are suitably supported at their lower ends on the lower horizontal frame member 13 and at their upper ends on the upper horizontal frame member 14 to support the carton receiving stations 50 and 50' as well as the other parts associated with the carton receiving stations. The carton receiving station 50 includes a pair of spaced frame members 55 and 56 (FIGURES 6 and 9) which are suitably secured to the inner surfaces of the posts 51, 52 and 54, 53, respectively. The frame members 55 and 56 are bridged and held in spaced apart relationship to each other by transverse frame members 59, 60 and 61 suitably secured at opposite ends to the frame members 55 and 56.

The frame members 55 and 56 support a pair of axles 62 and 63 on which respective sprocket wheels 64, 65 and 66, 67 are mounted and which in turn drivingly

support respective sprocket chains 70 and 71. The sprocket chains 70 and 71 are provided with special links which support opposite ends of a pair of spaced carton engaging lugs 72 spanning the distance between the chains 70 and 71 (FIGURE 9). A carton support plate 75 is suitably secured to the upper surfaces of the transverse frame members 60 and 61 for slidably supporting a carton as the carton is moved therealong by one of the lugs 72 engaging the rearmost surface thereof upon rotation of the chains 70 and 71.

Rotation is imparted to the chains 70 and 71 by rotation of a sprocket 76 which is fixed to a sprocket 77 (FIGURE 6) and both of which are fixed on one end of the axle 62. The sprocket 76 drivingly supports a chain 80 which extends downwardly in FIGURE 5 and drivingly engages the sprocket 76' associated with the lower carton receiving station 50'. The sprocket 77 is at times driven by a chain 82 (FIGURE 5) which extends upwardly from the sprocket 77 and is drivingly supported on a sprocket 83. The sprocket 83 is fixed on the output shaft of a gear reduction unit 84 which is suitably driven by an electric motor 85 (FIGURE 2). The motor 85 and gear reduction unit 84 are suitably supported on a base 86 which is mounted adjacent the upper ends of the posts 53 and 54.

Carton guide plates 90 and 91 (FIGURES 6 and 9) are suitably supported on the posts 51, 52 and 53, 54 respectively, with their lower edges terminating in spaced relation above the respective conveyor chains 70 and 71. It will be noted in FIGURE 6 that the forward end of the carton guide plate 90 is tapered or flared outwardly so that a carton may be easily placed in the opening 11 and on the support plate 75.

The carton receiving station 50 is provided with a closure plate or gate 95 which is pivotally supported on a post 96 (FIGURE 5 and 6) penetrating the frame member 56 and extending downwardly with the lower end thereof being embedded in the frame member 56' of the lower carton receiving station 50'. The gate 95 is normally urged to open position, shown in solid line in FIGURE 6, by a tension spring 97, one end of which is suitably secured to the rear surface of the gate 95 and the other end of which is suitably supported on the carton guiding plate 91. The gate 95 is at times moved to closed or dotted line position, shown in dotted lines in FIGURE 6, by a gate controlling suitable mechanism, to be later described.

The carton receiving station 50 is provided with a carton detector arm 100 (FIGURES 6 and 9) which is pivotally supported at one end on a post 101, the lower end of which is suitably supported on the frame member 55 so that the free end of the carton detector arm 100 is normally positioned between the carton guiding plates 90 and 91 and in the dotted line position shown in FIGURE 6. The carton detector arm 100 is engaged by the inner end of an arm 102, the outer end of which is suitably secured to a switch plate 103 hingedly supported on the vertical support post 51 by hinges 104 and 105 (FIGURE 2). The switch plate 103 is urged inwardly by a tension spring 106 (FIGURE 6) one end of which is suitably secured to the plate 103 and the other end of which is suitably secured to the frame member 55' (FIGURE 2).

The carton detector arm 100 is normally resiliently urged to the dotted line position shown in FIGURE 6 and when a carton C is placed on the support plate 75, the forward end of the carton C will move the detector arm 100 against the guide plate 90 to substantially the position shown in solid lines in FIGURE 6. A normally open electric switch 110 is mounted on the lower horizontal frame 13 (FIGURES 2 and 3) so that it will be engaged and closed by the switch plate 103 when the carton detector arms 100 or 100' are actuated upon a carton C being placed in either one of the carton receiving stations 50 or 50'.

When the switch plate 103 is moved to the dotted line position shown in FIGURE 3, the electric switch 110 will be closed to activate an electric circuit to the motor 85 and thus cause the conveyor chains 70 and 71 as well as the chains 70' and 71' to rotate. The lugs 72 and 72' will pass above the respective support plates 75 and 75' to engage the rear surface of a carton C in either of the carton receiving stations 50 or 50' and move the same along the corresponding support plate 75 or 75' in a direction from right to left in FIGURE 6. The manner in which the electric switch 110 is connected to the motor 85 will be later described.

Coin returning mechanism

Bottle detector switches 113 and 114 are pivotally supported at one end on the respective guide plates 90 and 91 (FIGURE 6) and are provided with inwardly projecting fingers or switch arms 115 and 116 which are positioned to engage the upper portion or neck of any bottles disposed in the carton C as the carton is carried along the support plate 75. The switches 113 and 114 are normally held in substantially the position shown in FIGURE 6 by respective tension springs 118 and 119, the ends of which are secured to the respective switches and to outwardly extending portions of the guide plates 90 and 91, respectively.

The switches 113 and 114 are electrically connected, in a manner to be later described, to respective coin returning mechanisms or devices broadly indicated at 120 and 121 respectively. The coin returning devices 120 and 121 may be of any conventional type and are illustrative as having a plurality of coin receiving and supporting tubes 122 and 123, respectively. The lower ends of the coin tubes 122 and 123 terminate above respective coin release plates or gates 124 and 125 adapted to release coins from the tubes upon lateral sliding movement of the plates 124 and 125. The gates 124, 125 are moved by energization of respective electrically controlled solenoids 126 and 127 connected to the gates and energized in a manner to be later described. The coin return device 121 is provided with a coin chute 130 adapted to receive the coins released from the tubes 123 to guide the same downwardly in FIGURES 2 and 5. The chute 130 is connected at its lower end to a chute 131 adapted to receive the coins released from the tubes 122 of the coin return device 120. The chute 131 is provided with a coin receiving opening 132 which mates with the opening 12 in the housing or cover 10 (FIGURES 1 and 5). The coin returning devices 120 and 121 are suitably supported on respective brackets 133 and 134 (FIGURE 2) suitably secured at opposite ends to the support posts 21 and 22 (FIGURE 8).

The conveyor chains 70 and 71 are normally stopped with the carton engaging lugs 72 in the position shown in FIGURES 2 and 10 so that when a carton C is placed in one of the carton receiving openings 11 or 11', the detecting arm 100 will be moved from the dotted line position shown in FIGURE 6 to the solid line position and thereby close the switch 110 to complete an electrical circuit and start the electric motor 85, in a manner to be later described. When the motor 85 is started, rotation will be imparted to the chains 70, 71 so that the lug 72 will engage and move the carton C along the carton support plate 75 and between the guiding plates 90 and 91. As the carton C moves along the support plate 75, each bottle will engage and momentarily close the corresponding switch 113 or 114 to actuate the coin returning devices 120 or 121 and return the correct amount of money for each bottle in the carton. As the carton C leaves the plate 75, it will move out of engagement with the arm 100 and the arm will move to the dotted line position shown in FIGURE 6, thereby breaking the electrical circuit to stop the electric motor 85.

Carton storage stations

When the carton C is moved off of the support plate

75 by the lug 72, it will be slid onto a carton storage platform indicated at 140. The upper storage platform 140 and the lower storage platform 140' are vertically spaced apart and suitably supported on the support posts 26, 27, 29, 30 and 31 (FIGURE 8). It will be noted in FIGURE 7 that the portion of the platform 140 which initially receives the cartons from the carton receiving station 50 is inclined downwardly toward the support posts 26 and 27 and inclined downwardly toward the support posts 30 and 31 (FIGURE 5). The first inclined portion is provided to keep the cartons C in engagement with a carton shifting rod 142 (FIGURES 7 and 8) as they are moved onto the storage platform 140 by the conveyor chain lugs 72 from the carton receiving station 50. The plate 140 is inclined downwardly toward the support posts 30 and 31 so that when a plurality of the cartons C are shifted out of alinement with the carton receiving station 50, in a manner to be later described, the slightly inclined surface will make shifting of the cartons C easier.

The carton shifting rod 142 is suitably supported for horizontal movement on the forward ends of guide rods 143 and 144 which are mounted for horizontal sliding movement in guide tubes 145 and 146 (FIGURE 2). The guide tubes 145 and 146 are suitably secured to the vertical posts 25, 27 and 24, 26, respectively. A yoke member 150 (FIGURE 8) is connected at its forward ends to the rod 142 and at its rear end to the front end of an arm 151. The rear end of the arm 151 is pivotally connected as at 152 (FIGURE 7) to the free end of an arm 153, the opposite end of which is suitably fixed on the side of a sprocket wheel 154.

The sprocket wheel 154 is mounted on a shaft 155 rotatably supported by the vertical support post 28. The sprockets 154 and 154' (FIGURE 2) are drivingly connected by a chain 156 engaging the sprockets 154 and 154' and the shaft 155 supports a sprocket 157 which is drivingly engaged by a sprocket chain 160. The sprocket chain 160 extends upwardly in FIGURES 2, 5 and 8 and drivingly engages a sprocket 161 fixed on the output shaft of a gear reduction unit 162, which is suitably connected to an electric motor 163. The motor 163 and gear reduction unit 162 are mounted on a platform or base 164 which is suitably supported on the frame members 24, 26 and 28 (FIGURE 8).

When an electrical circuit is completed to the electric motor 163, in a manner to be later described, rotation will be imparted to the sprocket wheels 157 and 154 thus rotating the arm 153 to move the arm 151 and rod 142 from the solid line position shown in FIGURE 7 to the dotted line position shown. Thus, a row of cartons C will be shifted out of alinement with the carton receiving station 50 and along the platform 140. With further rotation of the sprocket 154, the rod 142 will be moved back to the solid line position shown in FIGURE 7 and positioned to receive additional cartons C from the carton receiving station 50.

An upper detector arm 170 (FIGURES 2, 4 and 8) is hingedly connected as at 171 to the vertical support post 29 and has a switch plate 172 thereon. The switch plate 172 extends downwardly and is also supported on the lower detector arm 170' (FIGURE 2) and the lower end of the plate 172 is normally positioned in engagement with a normally open electric switch 173 to maintain the same in closed position. The plate 172 is at times moved to the dotted line position in FIGURE 4 to engage and close a normally open electric switch 174 (FIGURES 4 and 10). The arm 170 is normally held in the solid line position shown in FIGURE 4 by a tension spring 175, one end of which is connected to the plate 172 and the other end of which is connected to the post 29.

One end of the rod 142 (FIGURE 4) is provided with a roller 180 rotatably mounted on one end of an adjustment rod 181 suitably secured in a bracket 182 fixed on the rod 142. The rod 181 may be adjusted longitudinally relative to the rod 142 and the roller 180 is adapted to engage the detector arm 170 (FIGURE 2) when the rod 142 is moved forwardly or upwardly in FIGURE 4. The roller 180 will engage and hold the detector arm 170 in the dotted line position until the rod 142 returns to substantially the position shown in FIGURE 4. The detector arm 170 controls operation of the electric motor 163 to thus control movement of the carton shifting rod 142.

As successive cartons C are moved onto the plate 140 by the carton receiving station 50, they push previously positioned cartons along the plate 140 toward the detector arm 170 and upon a sufficient number of cartons being positioned on the plate 140, in this case, four cartons, the detector arm 170 will be moved by the foremost carton to substantially the dotted line position shown in FIGURE 4. At this time, the switch 173 will be opened and the switch 174 closed to complete an electric circuit, in a manner to be later described, and activate the motor 163 while preventing operation of the carton receiving stations and motor 85 until the carton shifting rod 142 has completed its cycle. The manner in which the electric switches 173 and 174 are connected in the electrical circuit to the motors 163 and 85 will be later described.

As successive cartons C are moved onto the platform 140, each time a row of four cartons is positioned in alinement with the carton receiving station 50, that row will be shifted or moved over by the rod 142 to push any rows of cartons already positioned on the platform 140 another step in movement. After this the rows of cartons have been shifted a sufficient number of times to fill the platform 140, in this case eight times, the leading row of cartons C on the platform 140 will engage and shift a detector rod 190 (FIGURES 5 and 8). The rod 190 is supported at opposite ends on the lower ends of arms 191 and 192 and the upper ends of which are pivotally supported on one end of respective brackets 193 and 194 which are fixed at their other ends to the posts 30 and 31. The arm 191 has one end of a cable 195 connected thereto and the opposite end of which is connected to an arm 196 fixed on the gate member 95 of the upper carton receiving station 50. Referring to FIGURE 8, it will be noted that the cable 195 has a tension spring 195*a* disposed intermediate its ends and the cable is guided around a pulley 195*b* rotatably mounted on the post 32.

The arm 191 also has one end of a cable 197 connected thereto and the cable 197 extends over a pulley 198, a pulley 198*a* (FIGURE 5), a pulley, not shown, positioned below the pulley 195*b* associated with the upper carton receiving station 50, and the opposite end of the cable 197 is connected to one end of an arm 200 (FIGURE 5) fixed at its other end to the gate 95' of the lower carton receiving station 50'. When a sufficient number of rows of cartons C is moved onto the platform 140, the foremost row of cartons C will move the rod 190 from left to right in FIGURE 5 thereby pulling on the cable 195 and closing the gate 95. Movement of the rod 190 will also slacken the cable 197 to allow the gate 95' to open. Thus, when the upper platform 140 has been completely filled with cartons, the gate 95 of the upper carton receiving station 50 will be closed and the gate 95' of the lower carton receiving station 50' will be opened so that the customer can then only place cartons in the lower opening 11' of the housing or cover 10.

As cartons are placed in the opening 11', they be successively carried rearwardly through the carton receiving station 50', the proper amount of money returned for each carton received and the rows of cartons stored on the platform 140'. When the platform 140' is filled with cartons the cartons must be removed from the machine and this may be accomplished by removing one wall of the cover 10. In order to prevent the reception of any more cartons after the machine is filled, a normally closed master or safety switch 199 is mounted on the platform 140' so that when the platform 140' is filled with cartons, the foremost row of cartons will engage and open the

switch 199 thereby breaking the circuit to the motors 85 and 163 to prevent further operation of the machine.

Wiring diagram

Referring to FIGURE 10, the electrical circuit of the machine includes a male plug 201 which may be connected to any suitable source of electrical current, not shown. The plugs 201 has main lead wires 202 and 203 suitably connected thereto and the lead wire 202 has the master switch 199 interposed therein to at times break the source of current to the machine, in the manner heretofore described. A pair of wires 202*a* and 203*a* are suitably connected at one end to the wires 202 and 203 and the opposite ends of the wires 202*a* and 203*a* are connected to the solenoid 127 of the coin returning mechanism 121. A pair of wires 205 and 206 connect opposite sides of the bottle detector switch 114 to the respective wires 202*a* and 203*a*. A wire 207 connects one side of the electric motor 85 with the wire 203 and a wire 208 connects the opposite side of the motor 85 with one side of the electric switch 110. A wire 210 connects the electric switch 110 with one side of the switch 173 and the other side of the switch 173 is connected to the wire 202 by a wire 211. Wires 212 and 213 connect the respective wires 202 and 203 to opposite sides of the bottle detector switch 113 and wires 214 and 215 connect opposite sides of the switch 113 to opposite sides of the solenoid 126 of the coin returning mechanism 120. A wire 216 connects the wire 202 with one side of the electric motor 163 and the opposite side of the motor 163 is connected to one side of the switch 174 by a wire 217. A wire connects the opposite side of the switch 174 with the main lead wire 203.

Method of operation

Assuming that all of the cartons and bottles have been removed from the machine, the gate 95 will be in the open position and the gate 95' will close the opening 11' so that anyone returning a carton of bottles for refund will place the same in the opening 11 and on the plate 75. As soon as a carton is placed on the plate 75, the forward end of the carton will move the detector arm 100 from the dotted line position shown in FIGURE 6 to the solid line position thereby moving the switch plate 103 to close the switch 110. As soon as the switch 110 is moved to closed position (FIGURE 10), an electrical circuit will be completed to the motor 85 to energize the same and rotate the chains 70 and 71, bringing the carton engaging lug 72 into engagement with the rear surface of the carton C to move the same along the support plate 75.

During its path of movement along the plate 75, any bottles disposed in the carton C will engage and momentarily close the switches 115 and 116 as the bottles pass thereby to activate the respective coin returning mechanisms 120 and 121 and return the correct number of coins for each bottle in the carton. In this manner, a carton having only one bottle therein would only close the corresponding switch 115 or 116 one time, depending upon which side of the carton C the bottle is disposed in, to thus refund only the correct amount of money in the opening 12. In the event the carton is filled with bottles, and in this case contains six bottles, each of the coin returning mechanisms 120 and 121 would be activated three times to deposit the correct number of coins in the chutes 130 and 131 which coins may then be removed at the opening 12.

The lug 72 would move or slide the carton C onto the storage platform 140 as the lug 72 moves out of engagement with the rear surface of the carton C. When four cartons C have been received by the carton receiving station 50 and moved onto the platform 140, the arm 170 will be moved to close the switch 174 and open the switch 173. By referring to FIGURE 10, it will be noted that when the switch 174 is closed, the electric motor 163 is energized and the circuit to the electric motor 85 is broken. When the electrical circuit is completed to the motor 163, rotation will be imparted to the sprocket chains 160 and 156 to thus cause the shifting rod 142 to move from left to right in FIGURE 7 and move the row of cartons over onto the receiving or storage plate 140 and out of alinement with the carton receiving station 50.

In order to prevent operation of the carton receiving station 50 and the conveyor chains 70 and 71 during the shifting of the row of cartons by movement of the shifting rod 142, the switch 173 is opened to break the circuit to the motor 85 and any cartons placed in the carton receiving station 50 will merely sit there although the switch 110 will be closed by movement of the arm 100. The open switch 173 will prevent rotation of the motor 85 until the shifting rod 142 has returned to its normal position, at which time the roller 180 will have moved out of engagement with the arm 170 allowing the same to return to its normal position shown in FIGURE 10.

The cycle of operation will then be repeated each time a carton is placed in the carton receiving station 50 and the cartons will be moved from right to left in FIGURE 8 until four cartons are positioned on the storage platform 140 in alinement with the carton receiving station 50. Each time four cartons are positioned on the storage platform 140 in alinement with the carton receiving station 50, the detector arm 170 will be moved to actuate the shifting rod 142 and shift the row of cartons out of alinement with the carton receiving station 50. When a row of cartons is shifted to fill the storage platform 140 with cartons, the detector rod 190 will move from left to right in FIGURE 5 thus closing the gate 95 and opening the gate 95' of the article receiving station 50'. The cartons will then have to be placed in the lower opening 11' since the gate 95 will have the opening 11 closed.

The operation of the lower article receiving station 50' and associated parts is identical to that described for the upper article receiving station 50 and therefore will not be described in detail. Each time a row of four cartons are moved onto the lower storage platform 140' and in alinement with the carton receiving station 50', the rod 142' will shift this row of cartons out of alinement with the lower article receiving station 50' and when the lower storage platform 140' is filled with cartons, the first row of cartons will engage and open the normally open main switch 199 to thus break the electrical circuit to the device and prevent functioning of either of the electric motors 85 or 163. At this time, the cover 10 or a panel of the same may then be removed and all of the cartons removed from the device.

The apparatus described and shown is illustrative of one type of apparatus which may be utilized to receive and store articles, such as cartons of soft drink bottles, and to automatically refund the proper amount of money to the person returning the cartons. It is to be understood that this invention is not limited to the particular apparatus shown since it is contemplated that in some cases it would be desirable to extend the storage platforms 140 and 140' through a wall and into a storeroom or the like and in other cases it might be desirable to have the carton receiving station deposit the cartons onto a conveyor belt which would carry the same into a storeroom or the like.

In order to reduce the number of parts required to construct the apparatus and reduce the cost, it also might be desirable to have only one article receiving station and a plurality of article storage platforms with the single article receiving station mounted on vertically extending trackways with a system for moving or elevating and lowering the article receiving station successively from one article storing platform to the other as each successive article storage platform is filled with cartons. It would also be possible to have only a single carton shift-

ing mechanism which could be vertically moved from one storage platform to the other.

Although the apparatus as shown and described is adapted to dispense "coins," the invention is not limited to this particular type of refund since the apparatus may be easily modified to dispense a token having a monetary value upon proper presentation. Also, the apparatus may be modified to dispense a printed receipt having a monetary value in accordance with the number of bottles received by the apparatus.

It is thus seen that an article receiving and storing device has been disclosed which is provided with means for receiving bottles returned to the place of purchase, storing the same out of sight in an orderly manner without any danger of breakage of the bottles and means for automatically refunding the correct amount of money, corresponding to the number of bottles returned in each carton, promptly to the customer without any undue delay.

In the drawings and specification there have been set forth preferred embodiments of the invention and, although specific terms are employed, they are used in a generic and descriptive sense only and not for purposes of limitation, the scope of the invention being defined in the claims.

I claim:

1. An apparatus for receiving cartons containing bottles and then refunding a predetermined value for each bottle in the carton comprising the combination of a carton having bottles positioned therein, a housing having an opening defining a carton receiving station, carton detecting means positioned at said carton receiving station and actuated in response to the insertion of said carton in said carton receiving station, carton conveying means operable in response to actuation of said carton detecting means to move a carton through and out of said carton receiving station, bottle detecting means positioned to detect the presence of each bottle in the carton as the same is carried through said carton receiving station, and refund dispensing means operable by said bottle detecting means.

2. An apparatus for receiving cartons containing bottles and then refunding a predetermined value for each bottle in the carton comprising the combination of a carton having bottles positioned therein, a housing having an opening defining a carton receiving station, carton detecting means positioned at said carton receiving station and actuated in response to the insertion of said carton in said carton receiving station, carton conveying means operable in response to actuation of said carton detecting means to move a carton through and out of said carton receiving station, bottle detecting means positioned to detect the presence of each bottle in the carton as the same is carried through said carton receiving station, refund dispensing means operable by said bottle detecting means, and a carton storage station positioned to receive successive cartons moved out of said carton receiving station.

3. An apparatus for receiving cartons containing bottles and then refunding a predetermined value for each bottle in the carton comprising the combination of a carton having bottles positioned therein, a housing having an opening defining a carton receiving station, first carton detecting means positioned at said carton receiving station and actuated in response to the insertion of said carton in said carton receiving station, carton conveying means operable in response to actuation of said carton detecting means to move a carton through and out of said carton receiving station, bottle detecting means positioned to detect the presence of each bottle in the carton as the same is carried through said carton receiving station, refund dispensing means operable by said bottle detecting means, a carton storage station positioned to receive successive cartons moved out of said carton receiving station, second carton detecting means positioned for actuation upon a predetermined number of cartons being moved out of said carton receiving station, and carton shifting means operable upon actuation of said second carton detecting means to simultaneously move said predetermined number of cartons laterally of the position originally positioned in said carton storage station.

4. An apparatus for receiving cartons containing bottles and then refunding a predetermined value for each bottle in the carton comprising the combination of a carton having bottles positioned therein, a housing having an opening defining a carton receiving station, electrical switch means positioned at said carton receiving station and actuated in response to the insertion of said carton in said carton receiving station, carton conveying means operable in response to actuation of said electrical switch means to move a carton through and out of said carton receiving station, bottle detecting means positioned to detect the presence of each bottle in the carton as the same is carried through said carton receiving station, refund dispensing means operable by said bottle detecting means, and a carton storage station positioned to receive successive cartons moved out of said carton receiving station.

5. An apparatus for receiving cartons containing bottles and then refunding a predetermined value for each bottle in the carton comprising the combination of a carton having bottles positioned therein, a housing having an opening defining a carton receiving station, carton detecting means positioned at said carton receiving station and actuated in response to the insertion of said carton in said carton receiving station, carton conveying means operable in response to actuation of said carton detecting means to move a carton through and out of said carton receiving station, electrical switch means positioned to detect the presence of each bottle in the carton as the same is carried through said carton receiving station, refund dispensing means operable by said electrical switch means, and a carton storage station positioned to receive successive cartons moved out of said carton receiving station.

6. An apparatus for receiving cartons containing bottles and then refunding a predetermined number of coins for each bottle in the carton comprising the combination of a carton having bottles positioned therein, a housing having an opening defining a carton receiving station, first electrical switch means positioned at said carton receiving station and actuated in response to the insertion of said carton in said carton receiving station, carton conveying means operable in response to actuation of said first electrical switch means to move a carton through and out of said carton receiving station, second electrical switch means positioned to detect the presence of each bottle in the carton as the same is carried through said carton receiving station, coin dispensing means operable by said second electrical switch means, and a carton storage station positioned to receive successive cartons moved out of said carton receiving station.

7. An apparatus for receiving cartons containing bottles and then refunding a predetermined value comprising the combination of a carton having bottles positioned therein, a housing having a pair of vertically spaced openings defining upper and lower carton receiving stations, carton detecting means positioned at each of said carton receiving stations and actuated in response to the insertion of a carton in either of said carton receiving stations, carton conveying means positioned at each of said carton receiving stations and operable in response to actuation of said carton detecting means to move a carton through and out of corresponding carton receiving stations, and coin dispensing means operable upon movement of a carton through either of said carton receiving stations.

8. An apparatus for receiving cartons containing bottles and then refunding a predetermined value comprising the combination of a carton having bottles positioned therein, a housing having a pair of vertically spaced openings de-

fining upper and lower carton receiving stations, carton detecting means positioned at each of said carton receiving stations and actuated in response to the insertion of a carton in either of said carton receiving stations, carton conveying means positioned at each of said carton receiving stations and operable in response to actuation of said carton detecting means to move a carton through and out of corresponding carton receiving stations, coin dispensing means operable upon movement of a carton through either of said carton receiving stations, and gate means associated with each of said carton receiving stations, said gate means being operable to selectively maintain either of said carton receiving stations in open condition to receive cartons while maintaining the other carton receiving station in closed position.

9. An apparatus for receiving and storing cartons containing bottles comprising the combination of a carton having bottles positioned therein, a housing having a plurality of vertically spaced openings defining a plurality of carton receiving stations, carton detecting means positioned in each of said receiving stations and actuated in response to the insertion of a carton in any of said receiving stations, carton conveying means positioned at each of said carton receiving stations for moving a carton through and out of corresponding carton receiving stations in response to actuation of said carton detecting means, a plurality of carton storage stations positioned to receive successive cartons moved out of corresponding carton receiving stations, gate means associated with each of said carton receiving stations, gate control means normally maintaining one of said gate means in open position and the remaining gate means inclosed position, and capacity indicating means controlling operation of said gate control means and being operable to close the open gate means upon said associated carton storage station being filled with cartons and open the gate means associated with an empty carton receiving station.

10. An apparatus for receiving and storing cartons containing bottles comprising the combination of a carton having bottles positioned therein, a housing having a pair of vertically spaced openings defining upper and lower carton receiving stations, carton detecting means positioned in each of said receiving stations and actuated in response to the insertion of a carton in either of said receiving stations, carton conveying means positioned at each of said carton receiving stations for moving a carton through and out of corresponding carton receiving stations in response to actuation of said carton detecting means, upper and lower carton storage stations positioned to receive successive cartons moved out of corresponding carton receiving stations, gate means associated with each of said carton receiving stations, gate control means normally maintaining one of said gate means in open position and the other of said gate means in closed position, and capacity indicating means controlling operation of said gate control means and being operable to reverse the normal position of said gate means upon said associated carton storage station being filled with cartons.

11. An apparatus for refunding a predetermined value for cartons of empty bottles comprising the combination of a carton having bottles positioned therein, means for receiving the cartons of bottles, means for conveying the cartons of bottles to a predetermined point, means positioned in the path of travel of the cartons of bottles for registering the number of bottles in each carton, and refund means responsive to said registering means for refunding a predetermined value in accordance with the number of bottles registered in each carton.

References Cited in the file of this patent

UNITED STATES PATENTS

927,168	Robb	July 6, 1909
1,117,272	Stender	Nov. 17, 1914
1,117,433	Owens	Nov. 17, 1914
1,767,583	Frick	June 24, 1930
1,897,072	Parks	Feb. 14, 1933
1,901,528	Olsen	Mar. 14, 1933
2,008,870	Little	July 23, 1935
2,037,931	Schmidt	Apr. 21, 1936
2,144,708	Rau	Jan. 24, 1939
2,260,643	Rosan	Oct. 28, 1941
2,345,355	Neal	Mar. 28, 1944
2,346,583	Jackson	Apr. 11, 1944
2,430,935	Klug	Nov. 18, 1947
2,513,662	McCullough	July 4, 1950
2,540,856	Andrews	Feb. 6, 1951
2,556,082	Hartness	June 5, 1951
2,804,958	Garrard	Sept. 3, 1957
2,908,440	Gurewitz	Oct. 13, 1959
2,916,186	Deland	Dec. 8, 1959