Feb. 21, 1961 C. GABRIELSEN 2,972,400

ESCAPEMENT WHEEL COIN TOTALIZER

Filed June 27, 1956

4 Sheets-Sheet 1

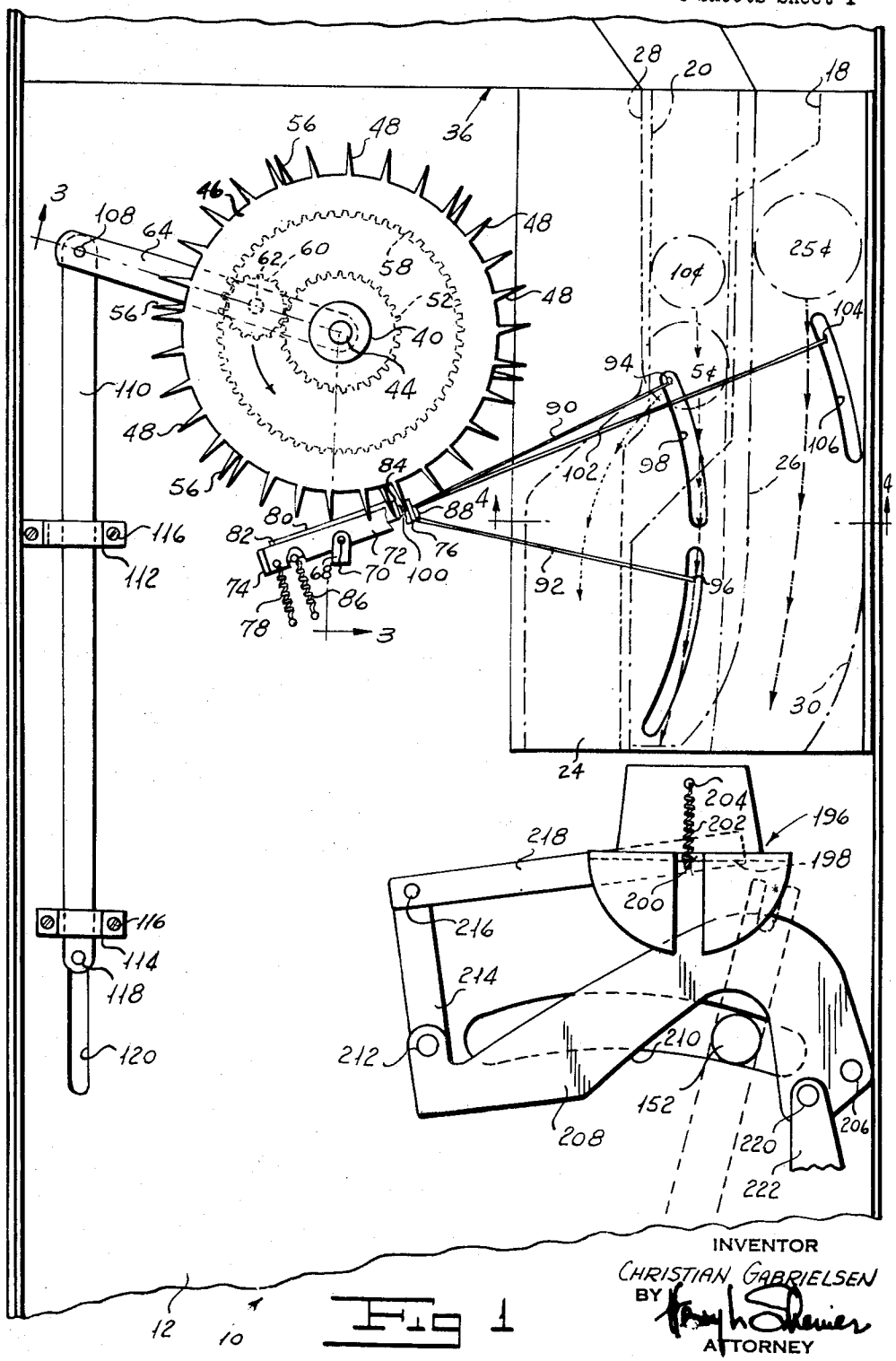

Fig 1

INVENTOR
CHRISTIAN GABRIELSEN
BY
ATTORNEY

Feb. 21, 1961 C. GABRIELSEN 2,972,400

ESCAPEMENT WHEEL COIN TOTALIZER

Filed June 27, 1956 4 Sheets-Sheet 2

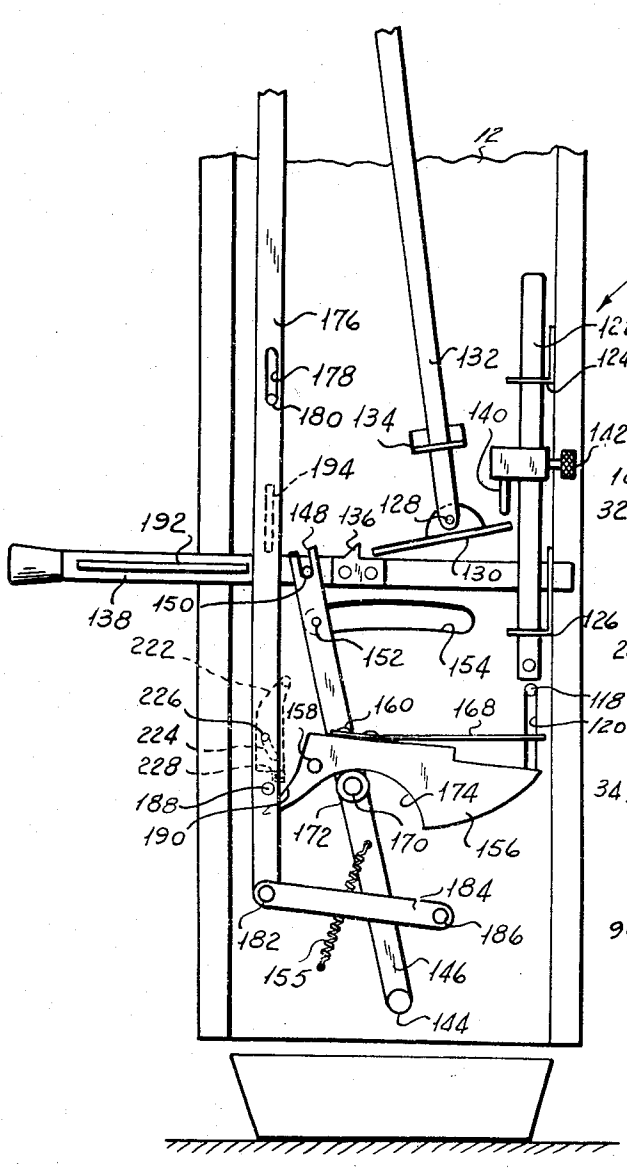

Fig 2

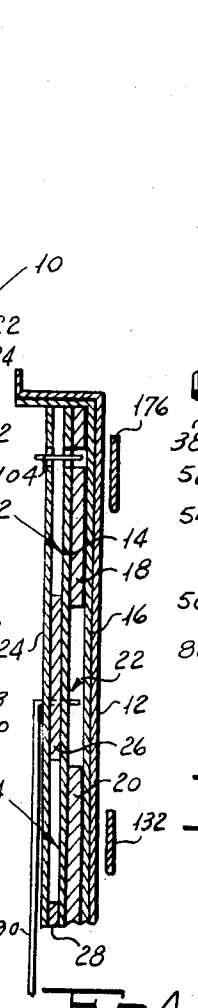

Fig 4

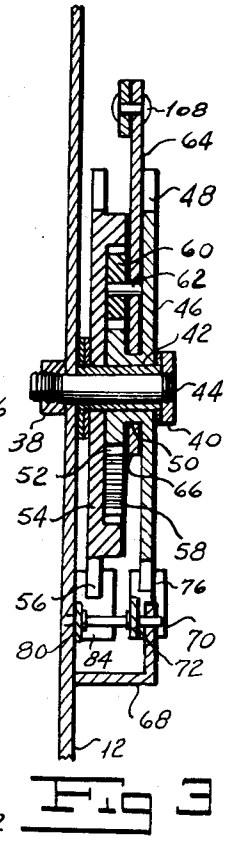

Fig 3

INVENTOR
CHRISTIAN GABRIELSEN
BY
ATTORNEY

Feb. 21, 1961 C. GABRIELSEN 2,972,400

ESCAPEMENT WHEEL COIN TOTALIZER

Filed June 27, 1956 4 Sheets-Sheet 3

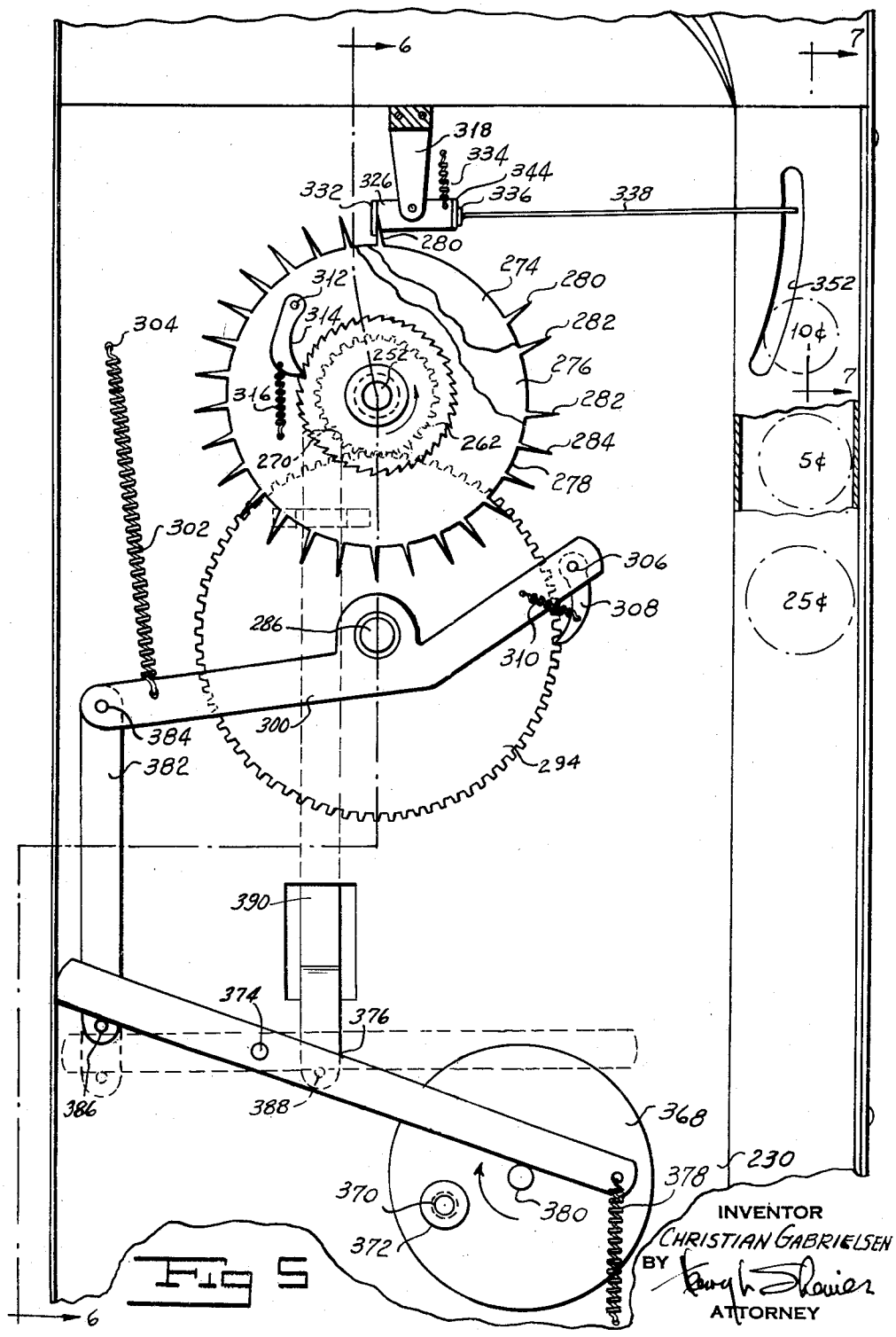

FIG 5

Feb. 21, 1961 C. GABRIELSEN 2,972,400

ESCAPEMENT WHEEL COIN TOTALIZER

Filed June 27, 1956 4 Sheets-Sheet 4

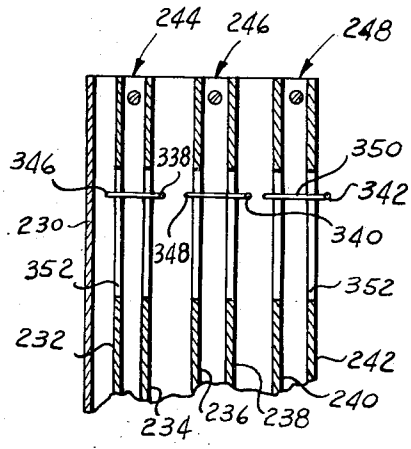

Fig 7

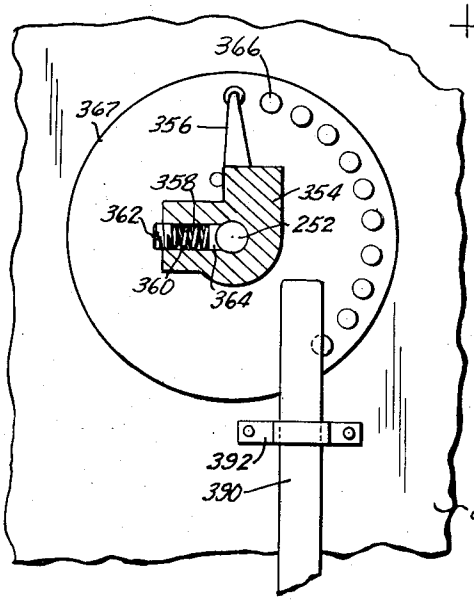

Fig 8

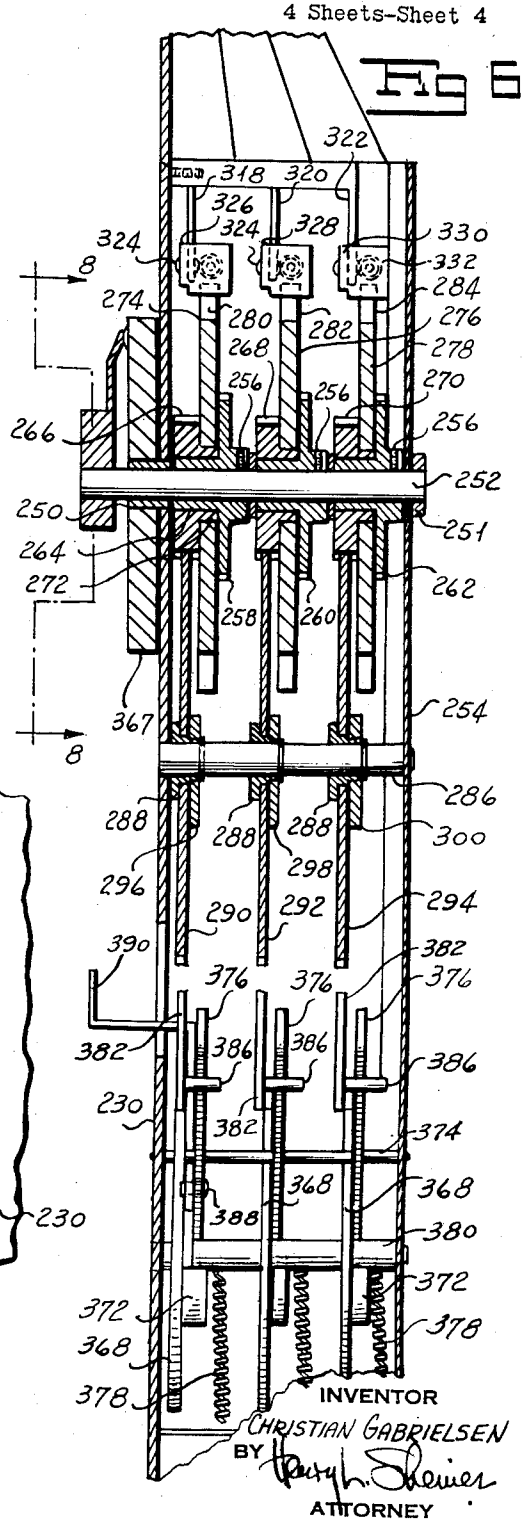

INVENTOR
CHRISTIAN GABRIELSEN
BY
ATTORNEY

United States Patent Office 2,972,400
Patented Feb. 21, 1961

2,972,400

ESCAPEMENT WHEEL COIN TOTALIZER

Christian Gabrielsen, Mountain Lakes, N.J., assignor to Rowe Manufacturing Co., Inc., Whippany, N.J., a corporation of New York

Filed June 27, 1956, Ser. No. 594,251

1 Claim. (Cl. 194—19)

My invention relates to an escapement wheel coin totalizer and more particularly to an escapement wheel coin totalizer for use with a merchandising machine for dispensing differently priced merchandise such as, for example, various types and brands of cigarettes selling at different prices.

My coin totalizer may be used with any merchandising machine. For purposes of convenience, I will describe my totalizer as used with a cigarette merchandising machine.

There is a presently existing demand for a large number of brands or kinds of cigarettes which must be sold at various prices. There are, for example, different brands of filter tip, "king" size, and regular cigarettes. Owing to differences in the cost of producing these different brands and kinds of cigarettes, they must be sold at various respective prices. If a merchandising machine is to meet the market demand, it must be provided with a coin mechanism including a coin totalizer adapted to totalize coins of various denominations deposited in the machine. In my copending application, Serial No. 520,263, filed July 6, 1955, I have disclosed a mechanical coin totalizer for registering sums in coins to any reasonable amount in all and sundry combinations of the common 5-cent, 10-cent, and 25-cent coins. The totalizer disclosed in the said copending application includes a pair of racks which move a floating pinion a distance along a line in accordance with the sum in coins deposited in the totalizer.

I have invented a coin totalizer including escapement wheels which permit angular movement of a normally restrained member in accordance with the sum of coins deposited in the totalizer. My escapement wheel coin totalizer is adapted for use with cigarette merchandising machines and the like for dispensing a large number of different types and brands of cigarettes selling at various prices. My totalizer is certain in operation. It is sensitive to all coins and permits only a corresponding movement of its mechanism for each coin deposited in the machine in accordance with the coin. My totalizer registers all coins deposited in the machine without regard to the speed with which coins are inserted in succession in the machine.

One object of my invention is to provide an escapement wheel coin totalizer for use with a merchandising machine adapted to sell different kinds or brands of merchandise at various respective prices.

A further object of my invention is to provide an escapement wheel coin totalizer which is certain in operation.

Yet another object of my invention is to proivde an escapement wheel coin totalizer for permitting a normally restrained member to move angularly an amount corresponding to the sum in coins deposited in the totalizer.

A still further object of my invention is to provide an escapement wheel coin totalizer having a member, the angular displacement of which is the analogue of the aggregate value of the coins deposited in the totalizer.

Other and further objects of my invention will appear from the following description:

In general, my invention contemplates the provision of an escapement wheel coin totalizer including an angularly movable member normally positioned to prevent operation of the dispensing means of the machine with which my totalizer is used. I provide escapement wheels responsive to the deposit in the totalizer of coins of various denominations for moving said movable member to a position corresponding to the sum in coins deposited in the totalizer. In other words, the angular movement of my movable member is the analogue of the sum in coins deposited in the machine. The arrangement of the machine with which my totalizer is used is such that the dispensing mechanism of the machine is conditioned to operate when a sum in coins at least equal to the purchase price of an article of merchandise has been deposited in the machine.

In the accompanying drawings which form part of the instant specification and which are to be read in conjunction therewith, and in which like reference numerals are used to indicate like parts in the various views:

Figure 1 is a fragmentary elevation of one form of my escapement wheel coin totalizer, showing a portion of one side of the totalizer.

Figure 2 is a fragmentary elevation of one form of my escapement wheel coin totalizer showing a portion of the other side of the totalizer.

Figure 3 is a fragmentary sectional view of one form of my escapement wheel coin totalizer taken along the line 3—3 of Figure 1.

Figure 4 is a fragmentary sectional view of one form of my escapement wheel coin totalizer drawn on an enlarged scale and taken along the line 4—4 of Figure 1.

Figure 5 is a fragmentary elevation of another form of my escapement wheel coin totalizer with its cover plate removed.

Figure 6 is a sectional view of the form of my escapement wheel coin totalizer shown in Figure 5 taken along the line 6—6 of Figure 5.

Figure 7 is a fragmentary sectional view of the form of my escapement wheel coin totalizer shown in Figure 5 taken along the line 7—7 of Figure 5.

Figure 8 is a fragmentary sectional view of the form of my coin totalizer shown in Figure 5 taken along the line 8—8 of Figure 6.

More particularly referring now to Figures 1 to 4 of the drawings, one form of my coin totalizer, indicated generally by the reference character 10, includes a support 12. Respective plates 14 and 16 carried by any convenient means on support 12 and maintained in spaced relation by respective spacers 18 and 20 define a dime coin passage, indicated generally by the reference character 22. The path of a dime traveling along passage 22 is defined by the shape of spacers 18 and 20. It is indicated by a broken line in Figure 1. A plate 24 carried by any convenient means on support 12 is maintained in spaced relation with plate 14 by respective spacers 26, 28, and 30. Plates 14 and 24 together with spacers 26 and 30 define a quarter coin passage, indicated generally by the reference character 32. The path of a quarter traveling down passage 32 is indicated by a dot-dash line in Figure 1. Plates 14 and 24 together with spacers 26 and 28 define a nickel coin passage indicated generally by the reference character 24. The path of a nickel traveling down passage 34 is indicated by a dotted line in Figure 1. The respective coin passages 34, 22, and 32 receive coins from a coin separator and slug ejector assembly indicated generally by the reference character 36.

Referring now more particularly to Figures 1 and 3, a pair of nuts 38 and 40 retain a bushing 42 on a shaft

44 carried by support 12. Bushing 42 rotatably carries an escapement wheel 46 formed with a plurality of teeth 48. A hub 50 of wheel 46 carries for rotation with it a sun gear 52 which may be integrally formed with the hub. Bushing 42 rotatably carries a second escapement wheel 54 having spaced peripheral teeth 56. I form an internally toothed ring gear 58 integrally with and around the periphery of wheel 54 adjacent teeth 56. A planet gear 60 pivotally mounted on a pin 62 carried by an arm 64 engages both sun gear 52 and ring gear 58. I form arm 64 with a hub 66 rotatably supported on hub 50 of wheel 46.

As can be seen by reference to Figure 1, planet gear 60 is gravity loaded so that it revolves about shaft 44 if either of the gears 52 or 58 carried by escapement wheels 46 and 54 is freed. I provide means for normally preventing rotation of either of the escapement wheels 46 and 54 except in response to the deposit of coins in the totalizer. Support 12 carries by any convenient means, such as welding or the like, a bracket 68 which, together with support 12, carries a pin 70. I pivotally mount a first latch 72 formed at its ends with respective arms 74 and 76 on pin 70. A spring 78 fixed between one end of latch 72 and the support 12 normally urges the latch to pivot in a counterclockwise direction as viewed in Figure 1 to engage arm 76 with a tooth 48 of escapement wheel 46. Pin 70 pivotally carries a second latch 80 having respective arms 82 and 84 at its ends. A spring 86 fixed between support 12 and an end of latch 80 normally urges the latch to pivot in a counterclockwise direction as viewed in Figure 1 to engage a tooth 56 of escapement wheel 54. It will be seen that latches 72 and 80 normally prevent movement of the respective escapement wheels 46 and 54 to prevent movement of planet gear 60 under the influence of gravity.

I provide means for actuating latches 72 and 80 to permit predetermined movements of the respective wheels 46 and 54 in response to the deposit of coins in the totalizer. A screw or the like 88 secures respective feeler arms 90 and 92 to the arm 76 of latch 72. Feelers 90 and 92 are formed with lateral extensions 94 and 96. Extension 94 passes through an arcuate slot 98 in plate 24 to extend into the nickel coin passage 34. Extension 94 passes through a second arcuate slot in plate 14 to extend into the dime coin passage 22. It will be seen that a nickel traveling downwardly along passage 34, as viewed in Figure 1, engages extension 94 to pivot feeler 90 and latch 72 in a clockwise direction against the action of spring 78. When escapement wheel 46 is so released, planet gear 60 travels under the influence of gravity in the direction indicated by the arrow in Figure 1 to drive gear 52 and escapement wheel 46 in a counterclockwise direction as viewed in Figure 1. When latch 72 pivots, its arm 74 engages a tooth 48 of wheel 46 to limit the movement of the wheel. After a nickel has passed by projection 94, spring 78 returns latch 72 to engage arm 76 with the tooth 48 following, in the direction of rotation of wheel 46, the tooth it engaged before feeler arm 90 was actuated. It will be seen that passage of a nickel downwardly through passage 34 results in a predetermined movement of escapement wheel 46 and planet gear 60.

Passage of a dime downwardly through passage 22 first actuates feeler arm 90 to permit a predetermined movement of planet gear 60 in the same manner as would a nickel passing downwardly through passage 34. After the dime passes by projection 94, latch 72 resets. After the latch resets and as the dime continues its travel downwardly through passage 22, it engages the projection 96 on feeler arm 92 again to actuate latch 72 and permit a second predetermined movement of planet gear 60. Passage of a dime downwardly through passage 22 permits a movement of planet gear 60 which is twice the movement permitted by passage of a nickel downwardly through passage 34.

A screw or the like 100 secures a quarter feeler arm 102 to arm 84 of latch 80. I form arm 102 with a lateral projection 104 extending through an arcuate slot 106 in plate 24 to extend into the quarter coin passage 32. A quarter traveling downwardly through passage 32 as viewed in Figure 1 engages projection 104 to pivot arm 102 in a clockwise direction, as viewed in Figure 1, to pivot latch 80 in a clockwise direction. As latch 80 pivots, arm 84 releases wheel 54 and gear 58. Planet gear 60 moves in the direction of the arrow in Figure 1 to drive gear 58 and wheel 54 in a counterclockwise direction. The pivotal movement of latch 80 moves arm 82 to engage a tooth 56 of wheel 54. After a quarter passes by a projection 104, spring 86 returns latch 80, and arm 84 engages the tooth 56 following, in the direction of movement of wheel 54, the tooth it engaged initially.

From the foregoing it will be seen that the teeth 48 of wheel 46 are so spaced that a predetermined movement of planet gear 60 is permitted for each actuation of latch 72. Since a dime actuates the latch twice, gear 60 moves twice as far in response to the passage of a dime through the totalizer as it does in response to the passage of a nickel through the totalizer. The teeth 56 of wheel 54 also are spaced to permit a predetermined movement of gear 60 in response to the deposit of a quarter in the totalizer. The spacing between teeth 56 is such that for a single actuation of latch 80 gear 60 moves five times as far as it does in response to the single actuation of latch 72. It will be seen that the movement of pin 62 along an arc of the circle having its center on the axis of shaft 44 is the analogue of the sum of coins deposited in my totalizer.

A pin 108 pivotally connects arm 64 to a rod 110 loosely supported for vertical sliding movement in guide brackets 112 and 114 fixed to support 12 by means such as screws 116. The end of rod 110 remote from pin 108 carries a pin 118 which passes through a slot 120 in support 12.

Referring now to Figure 2, a totalizer bar 122 slidably supported in respective brackets 124 and 126 carried by any convenient means on support 12 normally rests under the influence of gravity on pin 118. Since, as has been explained hereinabove, the arcuate movement of pin 62 is the analogue of the sum in coins deposited in the totalizer, the vertical movement of pin 118 in slot 120 also is the analogue of the sum of coins deposited in the totalizer. It will be seen that as pin 118 moves downwardly as viewed in Figures 1 and 2, bar 122 moves downwardly a corresponding amount under the influence of gravity. A pin 128 pivotally supports a stop latch 130 on a link 132 slidably mounted in a bracket 134 carried by support 12. Link 132 may be positioned by any suitable means such as a price differential mechanism of the type disclosed in the said copending application referred to hereinabove. Link 132 normally positions latch 130 so that one end of the latch is in the path of a stop 136 carried by a push rod 138 of the machine with which my totalizer is used. In the form of machine with which my totalizer is used, rod 138 is pushed to the right, as viewed in Figure 2, to initiate a dispensing operation. In the normal position of latch 130 this movement is prevented by the engagement of stop 136 with latch 130. Bar 122 carries a latch release member 140, the position of which on the bar 122 may be adjusted by means of a set screw 142. It will be seen that after a predetermined downward movement of bar 122 as viewed in Figure 2, member 140 engages latch 130 to pivot the latch in a clockwise direction to move it out of the path of stop 136.

A rod on shaft 144 pivotally carries an operating bar support arm 146 formed with a bifurcated end 148 which engages a pin 150 on bar 138. The operating bar 152 of the machine rides in a slot 154 formed in plate 12 and is

carried by arm 146. A spring 155 fixed between arm 146 and support 12 biases arm 146 to move bar 152 to the left end of slot 154 as viewed in Figure 2. When member 140 actuates latch 130 to permit rod 138 to move to the right as viewed in Figure 2, and when a dispensing operation is initiated, bar 152 moves to the right in slot 154. A dispensing operation then takes place in a manner known to the art.

My totalizer includes a reset lever 156 pivotally mounted on a pin 158 in support 12. Screws or the like 160 secure a leaf spring 168 to lever 156. A pin 170 on arm 146 rotatably carries a roller 172 on which lever 156 normally rests. When arm 146 pivots in a clockwise direction as viewed in Figure 2 in the course of a dispensing operation, roller 172 engages a cam surface 174 on lever 156 to pivot the lever in a counterclockwise direction as viewed in Figure 2. This movement of lever 156 engages spring 168 with pin 118 to reset bar 122 together with planet gear 60 and the wheels 46 and 54. The shape of teeth 48 and 56 and the disposition of latches 72 and 80 permit this resetting movement of wheels 46 and 54.

My totalizer includes a coin return link 176 slidably mounted on support 12 by a pin 180 disposed in a slot 178 formed in the link. A pin 182 pivotally connects link 176 to an arm 184 pivotally mounted on a pin 186 carried by support 12. If for any reason a customer wishes the return of his money before a dispensing operation has been initiated, he moves link 176 downwardly as viewed in Figure 2 and a roller 188 carried by the link engages a cam surface 190 on lever 156 to reset the totalizer mechanism in the manner described hereinabove. Rod 138 and link 176 carry respective cooperating lock blocks 192 and 194 which prevent a dispensing operation from being initiated after a coin return operation has been initiated.

Referring again to Figure 1, after having passed downwardly out of the respective coin passages 34, 22, and 32, the coins fall into an escrow bucket, indicated generally by the reference character 196. Bucket 196 includes a base 198 formed with ears 200. Springs 202 fixed between ears 200 and pins 204 carried by the bucket normally urge base 198 to close the bucket. I provide means responsive to a dispensing operation to tilt base 198 about one of its edges to direct coins in the bucket to a suitable coin receptacle (not shown). A pin 206 pivotally supports a money dump lever 208 on support 12. As the operating bar 152 moves to the right as viewed in Figure 2 it moves to the left as viewed in Figure 1 to engage a cam surface 210 on lever 208 to pivot the lever in a clockwise direction about pin 206. A pin 212 pivotally connects one end of a link 214 to lever 208. A pin 216 connects the other end of link 214 to a bucket base actuating arm 218 fixed to one of the ears 200. When lever 208 pivots in a clockwise direction as viewed in Figure 1, arm 218 pivots base 198 about its lefthand edge as viewed in Figure 1 to permit money in the bucket to fall to a suitable coin receptacle (not shown).

A pin 220 pivotally connects a link 222 to lever 208. I form link 222 with a curved slot 224 adapted to be engaged by a pin 226 carried by a link 176. Downward movement of link 222 normally is prevented by the engagement of the lower end of the link with a bracket 228 carried by plate 12. When a coin return operation is performed, pin 226 cams link 222 to the left as viewed in Figure 2 out of the way of bracket 228 as link 176 moves downwardly. Continued downward movement of link 176 moves lever 208 in a counterclockwise direction as viewed in Figure 1 to pivot base 198 about its righthand edge to permit coins in the bucket 196 to be returned to the customer through any convenient means (not shown) known to the art. It is to be noted that bracket 228 and link 222 prevent a dishonest customer from pivoting lever 208 by tilting the machine to return the money in bucket 196 after latch 130 has been released and before the operating bar has been moved to initiate a dispensing operation.

Referring now to Figures 5 to 8, another form of my coin totalizer includes a support 230. A plurality of respective plates 232, 234, 236, 238, 240, and 242 secured in spaced relationship to each other by any convenient means on support 230 form respective quarter, dime, and nickel coin slots, indicated generally respectively by the reference characters 244, 246, and 248. Respective bushings 250 and 251 carried by support 230 and by a cover plate 254 rotatably mount a shaft 252 which carries for rotation with it by means such as set screws 256 respective ratchet wheels 258, 260, and 262. Each of the wheels 258, 260, and 262 includes a hub 264 which rotatably supports one of three respective gears 266, 268, and 270. I form the gears 266, 268, and 270 with respective hubs 272, carrying for rotation with them by any convenient means such as keys or the like the respective quarter, dime and nickel escapement wheels 274, 276, and 278. I form the respective wheels 274, 276, and 278 with sets of teeth 280, 282, and 284.

A shaft 286 carried by support 230 and cover plate 254 supports a number of bushings 288 which rotatably carry respective gears 290, 292, and 294. The respective gears 290, 292, and 294 mesh with gears 266, 268, and 270. I pivotally mount respective actuating levers 296, 298, and 300 on shaft 286 for rotation with gears 290, 292, and 294. A number of springs 302 are each fixed at one end to a pin 304 carried by support 230 and at the other end to respective levers 296, 298, and 300. Each of the levers 296, 298, and 300 carries a respective pin 306 at its end remote from its associated spring 302. Pins 306 pivotally support pawls 308 normally urged by springs 310 into engagement with the respective gears 290, 292, and 294. From the foregoing it will be seen that springs 302 normally urge levers 296, 298, and 300 to pivot in a clockwise direction as viewed in Figure 5. Pawls 308 normally urge the respective gears 290, 292, and 294 to rotate in a clockwise direction as viewed in Figure 5. By reason of their engagement with gears 290, 292, and 294, gears 266, 268, and 270 and the escapement wheels 274, 276, and 278, carried by the gears for rotation with them, are normally urged to rotate in a counterclockwise direction. Each of the wheels 274, 276, and 278 carries a pin 312 which pivotally supports a pawl 314. Springs 316 normally urge pawls 314 into engagement with the respective ratchet wheels 258, 260, and 262. When an escapement wheel is freed, it drives its associated ratchet wheel 258, 260, or 262 in a counterclockwise direction as viewed in Figure 5 under the influence of the corresponding driving spring 302.

I provide means for restraining the respective escapement wheels 274, 276, and 278 against movement except in response to the deposit of coins in the totalizer. Respective brackets 318, 320, and 322 carried by support 230 carry pins 324 which pivotally mount respective latches 326, 328, and 330. Each latch 326, 328, and 330 includes an arm 332 normally held in engagement with a tooth of one of the escapement wheels 274, 276, and 278 by the action of a respective spring 334. Screws or the like 336 secure respective quarter, dime, and nickel feeler arms 338, 340, and 342, to respective ears 344 formed on latches 326, 328, and 330 at their ends remote from arms 332. The feeler arms 338, 340, and 342 have respective lateral extensions 346, 348, and 350 which extend through slots 352 in the walls of coin passages 244, 246, and 248.

A nickel traveling downward through passage 248 engages projection 350 to pivot feeler arm 342 to move the associated latch 330 to release wheel 278. When the latch pivots under the action of the nickel coin, its ear 344 engages a tooth 284. After the coin passes by projection 350, spring 334 resets latch 330 and the arm 332 engages the tooth 284 following, in the direction

of movement of wheel 278, the tooth 284 it engaged initially. Dime and quarter coins traveling downward through the respective passages 246 and 244 similarly release their respective wheels 276 and 274 to permit springs 302 to drive the wheels through predetermined arcs of rotation. As can be seen by reference to Figure 5, the relative spacing between adjacent teeth 284, adjacent teeth 282, and adjacent teeth 280 is such that the rotation of wheel 276 under the action of a dime is twice the rotation of wheel 278 in response to a nickel, and the rotation of wheel 274 in response to a quarter is five times the rotation of wheel 278 in response to a nickel.

When any of the wheels 274, 276, or 278 is to be driven by its spring 302, the associated pawl 314 drives the corresponding ratchet wheel 258, 260, or 262. Rotation of any one of these ratchet wheels also rotates shaft 252. It will be seen that the rotation of shaft 252 is the analogue of the sum in coins deposited in this form of my totalizer.

Referring now to Figures 6 to 8, I form the hub 354 of a switch contact arm 356 with a bore 358 housing a spring 360. A nut 362 retains spring 360 in bore 358 and forces it into engagement with a friction block 364. Block 364 bears against shaft 252 to engage hub 354 with shaft 252 under a predetermined force. As has been explained hereinabove, when any one of the escapement wheels 274, 276, or 278 is released, shaft 252 rotates a predetermined amount in a counterclockwise direction as viewed in Figure 5 and in a clockwise direction as viewed in Figure 8. As shaft 252 rotates, arm 356 successively engages a plurality of respective switch contacts 366 carried by a block 367 supported by any convenient means on support 230.

Movement of arm 356 to engage a contact 366 corresponding to at least the price of a selected article of merchandise, places the dispensing mechanism (not shown) of the machine with which my totalizer is used in condition to operate upon selection of an article. When a selection has been made, a machine drive motor (not shown) drives a plurality of crank plates 368 in the direction of the arrow shown in Figure 5. Each of the plates 368 carries a pin 370 which rotatably supports a reset roller 372. A pin 374 carried by support 230 and cover plate 254 pivotally carries respective reset levers 376. Springs 378 normally urge levers 376 to pivot in a clockwise direction as viewed in Figure 5 to engage the shaft 380 of plates 368. When plates 368 rotate during a dispensing operation, the respective rollers 372 engage levers 376 to pivot them in a counterclockwise direction as viewed in Figure 5. Each of the drive levers 296, 298, and 300 is pivotally connected to a respective reset link 382 by a respective pin 384. Each link 382 carries a pin 386 positioned to be engaged by a reset lever 376. When rollers 372 actuate levers 376, the levers drive the links 382 downward as viewed in Figure 5 against the action of springs 302 to pivot levers 296, 298, and 300 in a counterclockwise direction to reset all the pawls 308.

The lever 376 associated with lever 296 is pivotally connected by a pin 388 to a bent switch contact arm reset link 390 slidably supported in a bracket 392 fixed to support 230 by rivets or the like. When the rollers 372 pivot levers 376, link 390 is driven upward as viewed in Figures 5 and 8 and the link engages hub 354 to reset contact arm 356. Friction block 364 permits this movement which otherwise would be prevented by pawls 314.

In operation of the form of my invention shown in Figures 1 to 4, coins of various denominations are directed by coin separator and slug ejector 36 into the respective nickel, dime, and quarter coin passages 34, 22, and 32. A nickel traveling downwardly through passage 34 actuates feeler 90 to release latch 72 to permit a predetermined movement of gear 60 under the influence of gravity. A dime traveling downwardly through coin passage 22 actuates arms 90 and 92 in succession to permit twice said first predetermined arcuate movement of gear 60. A quarter traveling downwardly through coin passage 32 actuates feeler arm 102 to release latch 80 and escapement wheel 54 to permit a predetermined arcuate movement of the gear 60. The spacing between adjacent teeth of escapement wheel 46 with respect to the spacing between the adjacent teeth 56 of wheel 54 is such that the movement of gear 60 permitted by one actuation of latch 80 is five times the movement of gear 60 permitted by one actuation of latch 72. It will be appreciated from the foregoing that the movement of pin 62 supporting gear 60 along an arcuate path of a circle having its center on the axis of shaft 44 is the analogue of the sum in coins passing through my totalizer. Arm 64 translates the movement of gear 60 to link 110. A predetermined downward movement of link 110 permits a corresponding downward movement of bar 122. When a sum in coins equal to at least the purchase price of an article of merchandise has been deposited in the totalizer, member 140 pivots latch 130 to free bar 138. Actuation of bar 138 to initiate a dispensing operation drives operating bar 152 to the right in slot 154 as viewed in Figure 2. In the course of this movement, roller 172 actuates lever 156 to reset bar 122 and gear 60. Also in the course of this movement, operating bar 152 actuates lever 208 to pivot the base 198 of escrow bucket 196 to direct the coins to a suitable coin receptacle (not shown). If, before a selection has been made, a customer wishes his money returned, he moves link 176 downwardly as viewed in Figure 2 so that pin 226 cams link 222 to the left as viewed in Figure 2 out of the way of bracket 228. Further movement of link 176 downwardly pivots lever 208 and the base 198 of bucket 196 in a direction to return coins to the customer. In the course of the downward movement of link 176, roller 188 actuates lever 156 to reset the totalizer mechanism.

In operation of the form of my invention shown in Figures 5 to 8, the respective coin passages 244, 246, and 248 receive coins from a suitable coin separator and slug ejector of a type known in the art. Passage of coins down the respective passages 248, 246, and 244 releases the respective wheels 278, 276, and 274 to permit predetermined respective movements thereof under the influence of driving springs 302. The spacing between adjacent teeth of the respective wheels 278, 276, and 274 is such that a nickel actuating the latch 330 associated with wheel 278 permits only half the movement permitted a dime actuating latch 328 associated with wheel 276. The spacing between adjacent teeth 280 of wheel 274 is such that actuation of latch 326 permits five times the movement of wheel 274 as is permitted by the action of a nickel on the latch 330 associated with wheel 278. Owing to the engagement of drive pawls 314 with ratchet wheels 258, 260, and 262 carried by shaft 252 for rotation with it, the movement of shaft 252 is the analogue of the total sum in coins deposited in my totalizer. Shaft 252 moves contact arm 356 to engage a contact 366 corresponding to the total sum in coins passing through the totalizer. As is known in the art, when a sum in coins aggregating at least the purchase price of an article has been deposited in the machine and when the machine selecting means (not shown) is operated, a dispensing operation is performed and crank plates 368 rotate in the direction of the arrow shown in Figure 5. When cranks 368 rotate, rollers 372 actuate levers 376 to reset drive levers 296, 298 and 300. In the course of this resetting operation, link 390 is driven upwardly to reset switch contact arm 356. It is to be understood that in this form of my invention, I may employ a coin return mechanism similar to that shown and described in connection with the form of my invention shown in Figures 1 to 4. Coins passing outwardly from passages 244, 246, and 248 may be directed into an escrow bucket similar to the bucket 196 shown in Figure 1.

It will be seen that I have accomplished the objects of my invention. I have provided an escapement wheel coin totalizer for producing an angular movement corresponding to the total sum in coins passing through the totalizer. My escapement wheel coin totalizer is adapted to be used with merchandising machines for selling a large number of different brands or kinds of merchandise at various prices. My machine is certain in operation. It permits only a corresponding movement of its totalizer means for each coin deposited in the machine in accordance with the coin value.

Having thus described my invention, what I claim is:

A coin totalizer for producing an aggregate movement which is an analog of the sum of quarters, dimes, and nickels deposited therein including in combination a support, a first escapement wheel having a certain intertooth spacing, a second escapement wheel having an intertooth spacing which is five times the intertooth spacing of said first escapement wheel, means mounting said escapement wheels for rotary movement about an axis on said support, a sun gear carried by one of said escapement wheels for movement therewith, a ring gear carried by the other of said escapement wheels for movement therewith, a planet gear disposed between said ring and sun gears in driving engagement therewith, means biasing said planet gear for movement about said support axis, first means comprising a first escapement latch for normally restraining said first escapement wheel against movement, second means comprising a second escapement latch for normally restraining said second escapement wheel against movement, means responsive to the deposit in said totalizer of a nickel for actuating said first escapement latch once to permit a first predetermined movement of said planet gear around said support axis under the action of said biasing means, means responsive to the deposit in said totalizer of a dime for actuating said first escapement latch twice to permit twice said first predetermined movement of said planet gear around the support axis under the action of said biasing means and means responsive to the deposit in said totalizer of a quarter for actuating said second escapement latch to permit a second predetermined movement of said planet gear around the support axis under the action of the biasing means, which second predetermined movement is five times said first predetermined movement whereby the aggregate movement of said planet gear is an analog of the sum of quarters, dimes, and nickels deposited in the totalizer.

References Cited in the file of this patent

UNITED STATES PATENTS

430,001	Cook	June 10, 1890
1,118,106	Church	Nov. 24, 1914
1,377,844	McCutchen et al.	May 10, 1921
1,948,107	Gilchrist et al.	Feb. 20, 1934
2,032,228	Rowe	Feb. 25, 1936
2,046,977	Sortore et al.	July 7, 1936
2,106,042	Starke	Jan. 18, 1938
2,213,346	Mumma	Sept. 3, 1940
2,359,754	Fink	Oct. 10, 1944
2,802,473	Keefe	Aug. 13, 1957

FOREIGN PATENTS

532,906	Germany	Sept. 7, 1931
852,313	Germany	Oct. 13, 1952