Nov. 1, 1927. 1,647,689

C. S. DUMM

MEASURING AND CUTTING APPARATUS

Filed Dec. 7, 1922 3 Sheets-Sheet 1

Fig. 1.

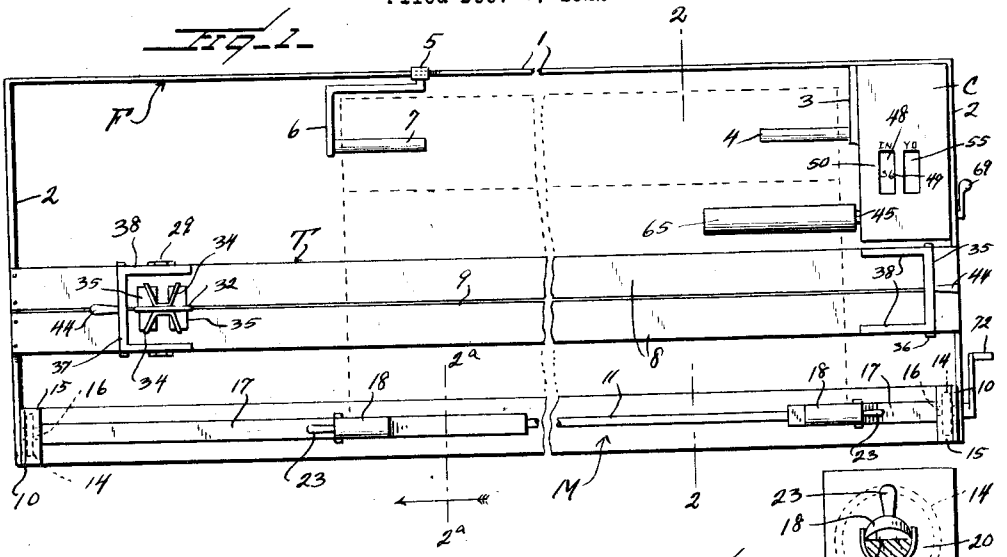

Fig. 2.

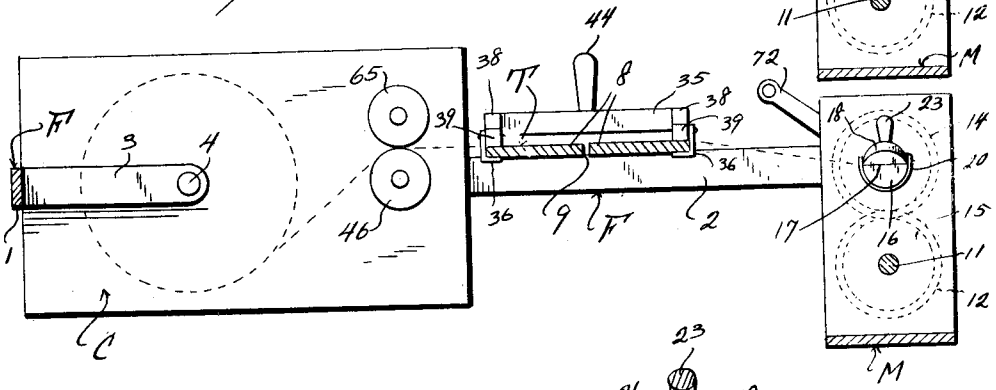

Fig. 5a.

Fig. 3.

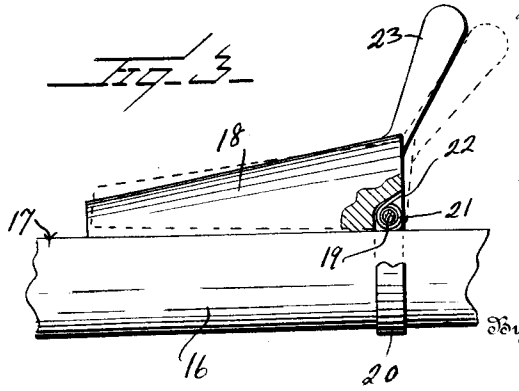

Fig. 4.

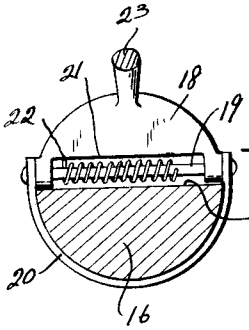

Inventor

C. S. Dumm

By Watson E. Coleman

Attorney

Nov. 1, 1927. 1,647,689

C. S. DUMM

MEASURING AND CUTTING APPARATUS

Filed Dec. 7, 1922 3 Sheets-Sheet 2

Fig. 5.

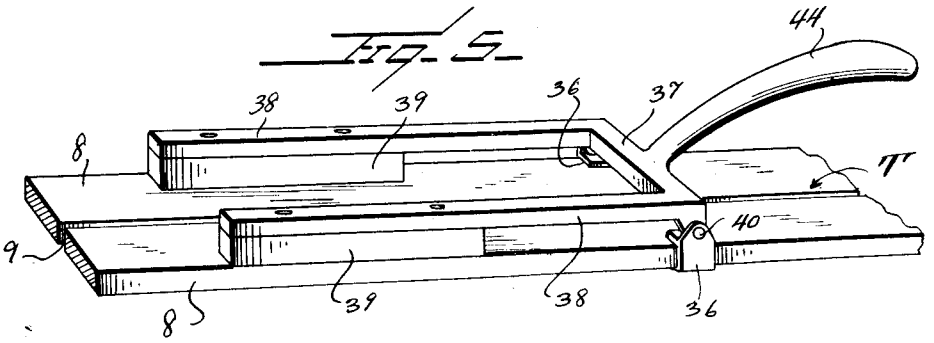

Fig. 6.

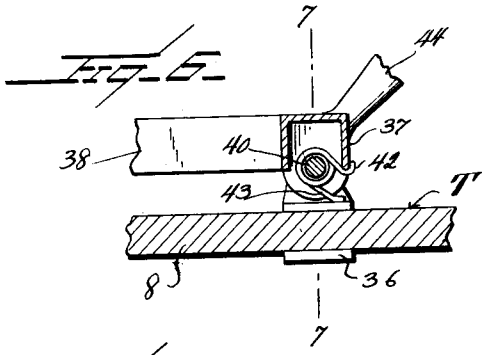

Fig. 7.

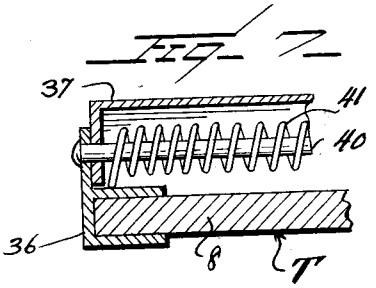

Fig. 8.

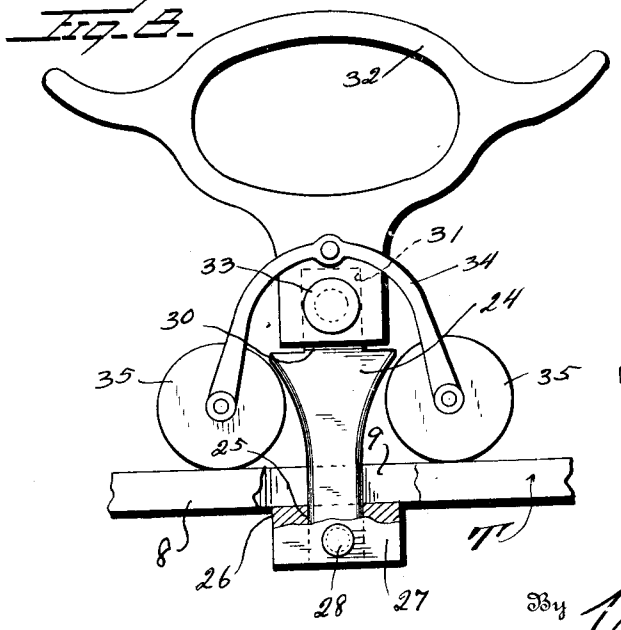

Fig. 9.

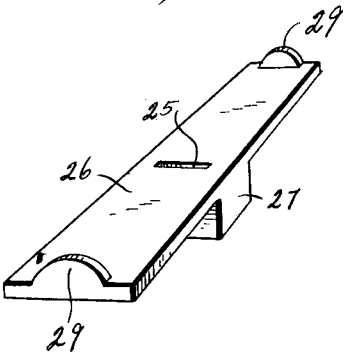

Inventor

C. S. Dumm

By Watson E. Coleman

Attorney

Nov. 1, 1927. 1,647,689

C. S. DUMM

MEASURING AND CUTTING APPARATUS

Filed Dec. 7, 1922 3 Sheets-Sheet 3

Fig. 10.

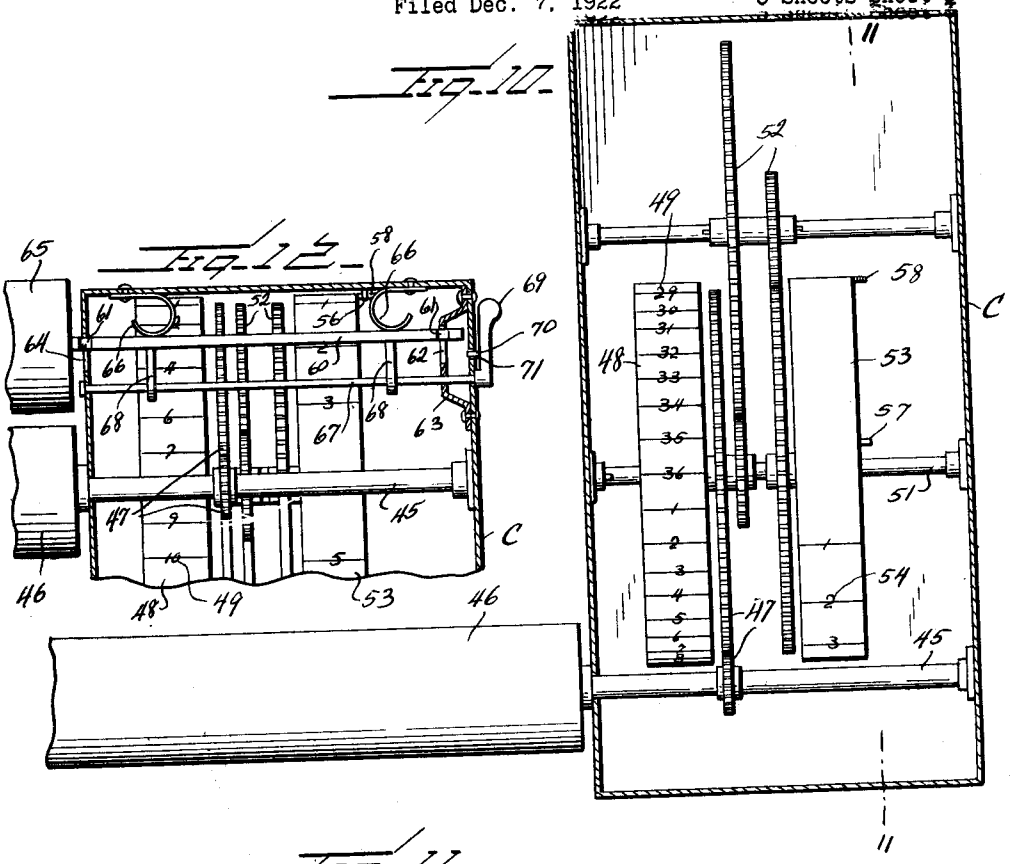

Fig. 12.

Fig. 11.

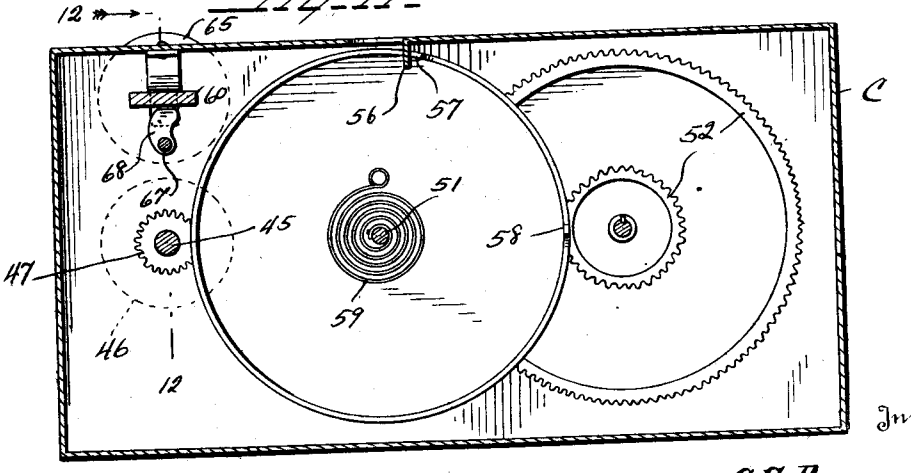

Inventor

C. S. Dumm

By Watson E. Coleman

Attorney

Patented Nov. 1, 1927. 1,647,689

UNITED STATES PATENT OFFICE.

CLIFFORD S. DUMM, OF WINNEMUCCA, NEVADA.

MEASURING AND CUTTING APPARATUS.

Application filed December 7, 1922. Serial No. 605,448.

This invention relates to certain improvements in measuring and cutting apparatus and has relation more particularly to an apparatus of this general character especially designed and adapted for use in connection with oil-cloth and other fabric and it is an object of the invention to provide an apparatus of this general character having novel and improved means whereby the movement or travel of the fabric relative to the cutting means is duly registered to indicate the linear measure.

It is also an object of the invention to provide a novel and improved device of this general character whereby the material to be severed is rolled or wound to facilitate the handling of the severed material.

Another object of the invention is to provide a novel and improved apparatus of this general character comprising a cutting mechanism including a support or table provided with means for clamping the material thereto, together with a cutting element slidably supported by said support or table.

An additional object of the invention is to provide a novel and improved device of this general character embodying a rotatable and movable registering member operable under the influence of the movement of the material to be measured together with means for automatically returning said movable registering member to a normal position and to maintain the same in such position.

The invention consists in the details of construction and in the combination and arrangement of the several parts of my improved measuring and cutting apparatus whereby certain important advantages are attained and the device rendered simpler, less expensive and otherwise more convenient and advantageous for use, as will be hereinafter more fully set forth.

The novel features of my invention will hereinafter be definitely claimed.

In order that my invention may be the better understood I will now proceed to describe the same with reference to the accompanying drawings wherein:—

Figure 1 is a view in top plan of an apparatus constructed in accordance with an embodiment of my invention;

Figure 2 is an enlarged transverse sectional view taken substantially on the line 2—2 of Figure 1;

Figure 2^a is a detail sectional view substantially on the line 2^a—2^a of Figure 1;

Figure 3 is an enlarged fragmentary view partly in section and partly in elevation illustrating one of the clamping members comprised in the rolling or winding mechanism herein disclosed, the second position of the clamping member being indicated by dotted lines;

Figure 4 is a view partly in end elevation and partly in section of the structure illustrated in Figure 3;

Figure 5 is a fragmentary view in perspective of one of the clamping members associated with the support or table comprised in the cutting mechanism;

Figure 6 is a fragmentary longitudinal sectional view taken through Figure 5, illustrating in detail the mounting for the clamping member;

Figure 7 is a detail sectional view taken substantially on the line 7—7 of Figure 6;

Figure 8 is an enlarged fragmentary view partly in section and partly in elevation of the cutting member as herein disclosed.

Figure 9 is a view in perspective of an under slide comprised in the cutting mechanism and applied;

Figure 10 is an enlarged fragmentary view partly in horizontal section and partly in top plan of the measuring means as herein disclosed;

Figure 11 is a sectional view taken substantially on the line 11—11 of Figure 10;

Figure 12 is an enlarged sectional view taken substantially on the line 12—12 of Figure 11.

As disclosed in the accompanying drawings, F denotes a frame of desired dimensions and which includes an elongated rear member 1 and the end members 2. The frame F is adapted to be maintained in any desired manner at a preferred height but this in itself forms no part of the present invention and it is thought that a description and illustration thereof is unnecessary. An end portion of the member 1 and an end member 2 of the frame F have suitably secured thereto a casing or housing C of the measuring mechanism to be hereinafter more particularly referred to.

Extending inwardly of the frame F from the member 1 and immediately adjacent to the casing C is an arm 3 provided with an inwardly directed arm or rod 4. Engaged with the member 1 for movement therealong is a slide 5 provided with an inwardly directed bracket 6 having an arm or rod 7

substantially in alignment with the arm or rod 4 hereinbefore referred to. A roll of oilcloth or other fabric is supported by the arms or rods 4 and 7 and the requisite mounting of the roll can be readily accomplished upon proper manipulation of the slide 5.

Supported by the end members 2 of the frame F forwardly of the casing C is a table or shelf T herein disclosed as comprising two spaced flat strips 8 affording therebetween a relatively narrow or restricted slot 9. Positioned between and supported by the end members 2 of the frame F and at a point in advance of the shelf or table T is a substantially U-shaped member M. Rotatably supported by the vertical or end arms 10 of the member M is a shaft 11, and said shaft immediately adjacent to each of the vertical or end arms 10 has fixed thereto a gear 12 meshing with the gear 14 thereabove. Each set of gears 12 and 14 being housed within a casing 15. Each of the gears 14 is fixed to a shaft 16 which extends inwardly of the member M a predetermined distance. The extended portions of the shaft 16 or those portions arranged inwardly of the casing 15 are of increased diameters and provided with flattened faces 17. The inner ends of the shafts 16 are spaced apart a desired distance and it is to be particularly noted that in Figure 1, one of the shafts 16 is of a length materially less than the length of the second shaft. Coacting with the flattened face 17 of each of the shafts 16 is a clamp 18 having a flattened face opposed to the flattened face 17 of the shaft 16. One end portion of the clamp is pivotally or hingedly connected by the bolt 19 with the extremities of a slide or strap 20 straddling the shaft 16 from below. Coacting with the bolt 19 and the member 18 is a spring 21 which operates to constantly urge the clamp member 18 toward the shaft 16. The spring 21 is herein disclosed as encircling the bolt 19 with one end portion thereof secured to said bolt, while the opposite end portion of the spring terminates in an extension 22 bearing against the adjacent end portion of the clamp member 18. In order to permit the desired application of the spring 21, the adjacent end portion of said clamp member 18 is cut out as is clearly illustrated in Figures 3 and 4.

The pivoted or hinged end portion of the clamp member 18 is provided with an upstanding handle 23 to facilitate the desired manipulation of the clamp member 18. Each of the clamp members 18 may be readily moved lengthwise of the associated shaft 16, so that said clamp member may be properly positioned in accordance with the requirements of practice.

Disposed through the slot 9 of the table or shelf T is a vertically disposed cutting blade 24 having its opposite vertical margins formed into cutting edges. The lower portion of the blade 24 extends within a recess or pocket 25 produced in the central portion of an underslide 26. The pocket or recess 25 is continued within a lug or enlargement 27 depending from the slide 26 and threaded through the side of said lug or enlargement 27 is a binding screw 28 which engages the portion of the knife 24 within the pocket or recess 25.

The slide 26 underlies the table or shelf T and is in contact therewith and the extremities of said slide 26 are provided with the upstanding lugs or wings 29 to contact with the longitudinal edges of the table or shelf T, whereby the slide 26 is held against swinging movement.

The upper portion of the knife 24 is provided with an extension or tang 30 which is received within a socket 31 produced in a handle member 32, said tang 30 being held or locked within the socket 31 through the instrumentality of the clamping screw 33 or the like.

Secured to the opposite sides of the handle member 32 are the irons 34 extending in opposite directions beyond the cutting edges of the blade 24 and which provide bearings for the rollers 35 of rubber or other yieldable material, said rollers being disposed transversely of the table or shelf T and bridging the slot 9, as clearly illustrated in Figure 1 of the accompanying drawings. The rollers 35 facilitate the movement of the knife 24 lengthwise of the slot 9 and at the same time materially facilitate the desired cutting operation.

Slidably engaged with the outer marginal portions of the table or shelf T are the brackets 36, said brackets being arranged in pairs at opposite end portions of the table or shelf T. The brackets 36 have pivotally engaged therewith the base portion of a substantially U-shaped clamp 37, each side arm 38 of which overlies the outer marginal portion of the strip 8. The outer end portions of the arms 38 of each of the clamps 37 have secured to the under faces thereof the elongated strips 39 of rubber or the like.

The clamp 37 is pivotally and hingedly connected with its associated bracket 36 by an elongated bolt or pin 40. Encircling the pin or bolt 40 is a spring 41, one extremity of which has contact with the adjacent or base portion of the clamp 37 as indicated at 42 in Figure 6, while the opposite end portion of said spring is in contact with a bracket 36, as indicated at 43 in Figure 6. The spring 41 serves to constantly urge the arms 38 of the bracket 37 toward the table or shelf T.

The base portion of each of the clamps 37 is provided with a handle member 44 to facilitate the desired operation of the clamp.

The clamps 37 are readily movable lengthwise of the table or shelf T so that the same may be positioned as required.

The measuring or registering mechanism comprises a shaft 45 mounted in the casing C and rotatably supported thereby, said shaft extending outwardly beyond the inner face of the casing C and carrying an under roller 46 over which the material to be measured passes. The shaft 45 is operatively connected by the gears 47 with an indicating reel or drum 48 provided on its periphery with the indications 49 to denote inches, said indications being consecutively numbered from "1 to 36" and adapted to be separately exposed through a window 50 produced in the top of the casing C. The reel or drum 48 is mounted upon a shaft 51 extending across and supported by the opposed walls of the casing C and said reel or drum 48 is in driving connection through the instrumentality of the gears 52 with a second reel or drum 53 loosely mounted upon the shaft 51. The periphery of the reel or drum 53 is provided with indications 54 denoting yards and in practice I find the desired results can be obtained by having the indications 54 consecutively numbered from "1 to 12". The indications 54 are adapted to be separately exposed through a second window 55 produced in the top of the casing C and to one side of and in relatively close proximity to the window 50 hereinbefore referred to. It is to be understood that the gears 52 are of such ratio that upon revolution of the reel or drum 48, the reel or drum 53 will be moved a distance equal to the space between adjacent indications 54.

Depending from the top of the casing C and preferably at an end of the opening 55 is a finger or lug 56, Fig. 11, with which are adapted to contact the laterally disposed and circumferentially spaced lugs or fingers 57 and 58.

The reel or drum 53 is constantly urged or rotated in one direction by the helical spring 59, having its inner extremity fixed to the shaft 51 and its outer end portion anchored to a side face of the reel or drum 53. This spring 59 serves to normally maintain the reel or drum 53 in the position determined by contact of the lug or finger 56, resulting in exposure of the blank portion of the periphery of said reel or drum 53 immediately adjacent the indication "1". The lug or finger 58 is adapted to contact with the lug or finger 57 to prevent the reel or drum 53 making more than substantially a single revolution.

Positioned directly above the shaft 45 is a flat bar or strip 60 having its opposite end portion provided in its margins with notches 61. The inner or inserted end portion of the bar 60 extends through a slot 62 provided in a bracket plate 63 carried by the outer side wall of the casing C, with the side marginal portions of the plate defining said slot received within the adjacent notches 61. The notches in the opposite end portion of the bar or member 60 receive the marginal portions of the inner face of the casing C, defining the slot 64 through which the bar or member extends. The slots 62 and 64 permit the bar or member 60 to have movement toward or from the shaft 45.

The extended portion of the bar or member 60 carries a roller 65 positioned above the roller 46 hereinbefore referred to and which, during a measuring operation, presses the material or cloth on the roller 46.

The bar or member 60 is constantly urged in a direction toward the shaft 45 by the expansible members or springs 66, carried by the top of the casing C and contacting thereabove with the bar or member 60.

Underlying the bar or rod 60 and rotatably supported by the opposed walls of the casing C is a rock shaft 67 provided at spaced points therealong with the cam members 68 which, upon rotation of the shaft 67 contact with the bar or member 60 from below and thereby act to force the bar or member 60 in a direction away from the shaft 45 and thereby separating the rollers 65 and 46. The shaft 67 extends beyond the outer side walls of the casing 63 and disposed through said extended portion is fixed an operating lever 69, whereby the shaft 67 may be rotated to cause the cam members 68 carried thereby to contact with the bar or member 60 to effect the necessary movement to separate the rollers 65 and 46. This lever 69 is provided with an inward pin or finger 70 directed through the opposite slot 71 in the adjacent side wall of the casing C to limit the extent of rocking movement of the shaft 67.

In practice the oil-cloth or other fabric to be measured is rolled and wound upon the rods 4 and 7. The fabric is then drawn over the roller 46 to bring the outer edge of said fabric to the slot 9 and at which time the shaft 67 has been rocked to raise the roller 65 into an inoperative position and the knife 24 moved to a position at one side of the fabric. The roller 65 is then lowered for contact with the upper surface of the fabric to create the requisite pressure so that as the fabric is drawn between the rollers 46 and 65 the reels or drums 48 and 53 will register. After the fabric has been drawn a sufficient distance between the rollers 46 and 65 the outer end portion of said fabric is clamped to the flattened faces 17 of the shafts 16 by the clamp members 18. The shaft 11 is then rotated by the crank 72 or otherwise as may be preferred to wind the fabric around the shafts 16 as the fabric is drawn between the rollers 46 and 65 and which operation is continued until the desired length is registered

by the reels or drums 48 and 53. At this time the fabric overlying the table or shelf T is securely held thereto by the clamps 37, whereupon the knife 24 is pushed along the slot 9 to sever the fabric.

As particularly illustrated in Figure 1, it is to be noted that the knife 24 and parts concomitant thereof are positioned between the clamps 37 so that said clamps will offer no hindrance or obstruction to the function of said knife.

After the fabric has been severed the clamps 37 are disengaged and the material rolled by the shafts 16 can be readily removed, such removal being facilitated in view of the fact that one of the shafts 16 is of a length materially greater than that of the second shaft 16. Before the severed fabric is removed from the shafts 16, it is to be understood that the clamps 18 are disengaged therefrom and moved inwardly of the shaft 16 free of said fabric. It is also to be understood that when the clamps 37 are disengaged from the fabric they are also moved along the table or shelf T away from the fabric.

An apparatus constructed in accordance with an embodiment of my invention as will be readily understood, is particularly desirable for use in the sale of oil-cloth or kindred fabric as it permits such fabric to be easily handled.

From the foregoing description it is thought to be obvious that a measuring and cutting apparatus constructed in accordance with my invention is particularly well adapted for use by reason of the convenience and facility with which it may be assembled and operated, and it will also be obvious that my invention is susceptible of some change and modification without departing from the principles and spirit thereof and for this reason I do not wish to be understood as limiting myself to the precise arrangement and formation of the several parts herein shown in carrying out my invention in practice except as hereinafter claimed.

I claim:—

An apparatus of the class described comprising, in combination, a table, means for supporting the fabric roll carried by the table, a registering mechanism including an operating shaft for the mechanism, a roller carried by the shaft over which fabric is adapted to be drawn, a second roller rotatably supported above the first named roller, means for constantly urging the second named roller toward the first named roller to hold fabric to the first named roller so that as the fabric is drawn over the first named roller said first named roller will rotate the registering mechanism, a bar carrying the second named roller and extending therebeyond, the means for urging the second named roller toward the first named roller directly engaging said bar, a second shaft rotatably supported closely adjacent to the bar, cam members carried by said second shaft and contacting with the bar, means for rotating the shaft to cause the cam members to move the bar in a direction to carry the second roller away from the first roller and the fabric passing thereover, and cutting means carried by the table.

In testimony whereof I hereunto affix my signature.

CLIFFORD S. DUMM.