United States Patent [19]

Korzekwa et al.

[11] **3,904,925**

[45] **Sept. 9, 1975**

[54] **POWER SUPPLY FOR A THERMIONIC EMISSION GAS DISCHARGE LAMP**

[75] Inventors: **Samuel M. Korzekwa,** Baldwinsville; **William Peil,** Syracuse, both of N.Y.

[73] Assignee: **General Electric Company,** Syracuse, N.Y.

[22] Filed: **Oct. 1, 1973**

[21] Appl. No.: **402,461**

[52] **U.S. Cl.** **315/171;** 315/DIG. 5; 315/103; 315/174

[51] **Int. Cl.**[2] **H05B 37/00**

[58] **Field of Search** 315/DIG. 5, 171, 174, 102, 315/103, 175

[56] **References Cited**

UNITED STATES PATENTS

3,334,270 8/1967 Nuckolls 315/DIG. 5

Primary Examiner—R. V. Rolinec
Assistant Examiner—Lawrence J. Dahl
Attorney, Agent, or Firm—Richard V. Lang; Carl W. Baker; Frank L. Neuhauser

[57] **ABSTRACT**

The present invention relates to a power supply for a gas discharge lamp such as a xenon arc lamp normally operating in the thermionic emission mode. The power supply is energized from an a.c. line and includes a d.c. source of low voltage and high current for sustained operation and a starter. During starting, the starter provides a succession of high voltage trigger pulses for initiating the gas discharge and a succession of unidirectional, medium voltage power pulses synchronized with the trigger pulses for heating the lamp to thermionic emission temperature. The medium voltage pulses are portions of half cycles derived from the a.c. line and applied to the lamp without filtering or energy storage. The circuit uses low cost components and provides a gradual warm-up of the lamp with a minimum of thermal shock.

10 Claims, 1 Drawing Figure

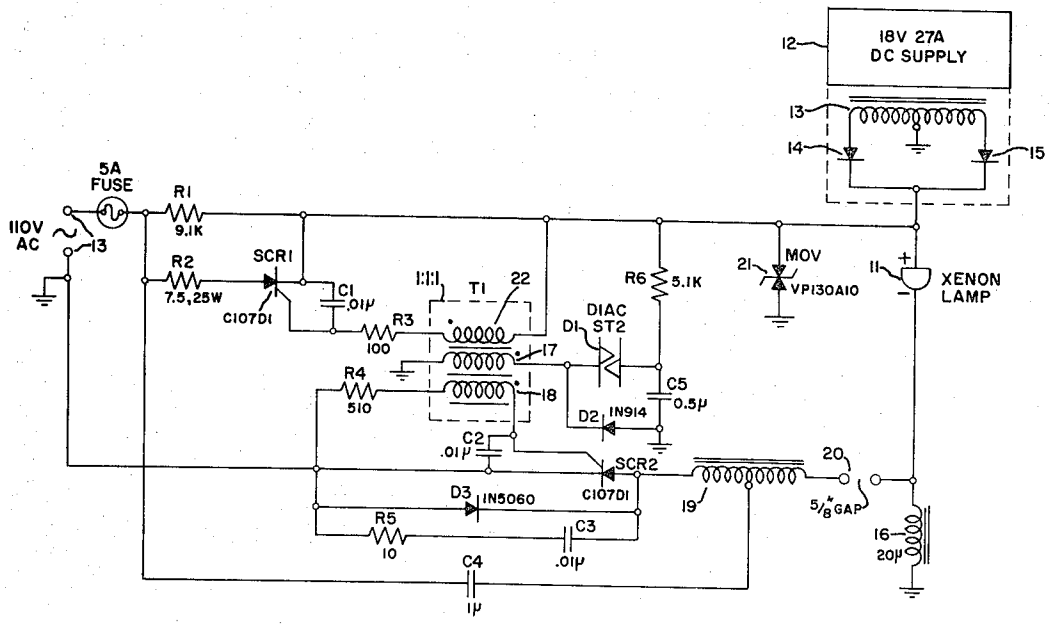

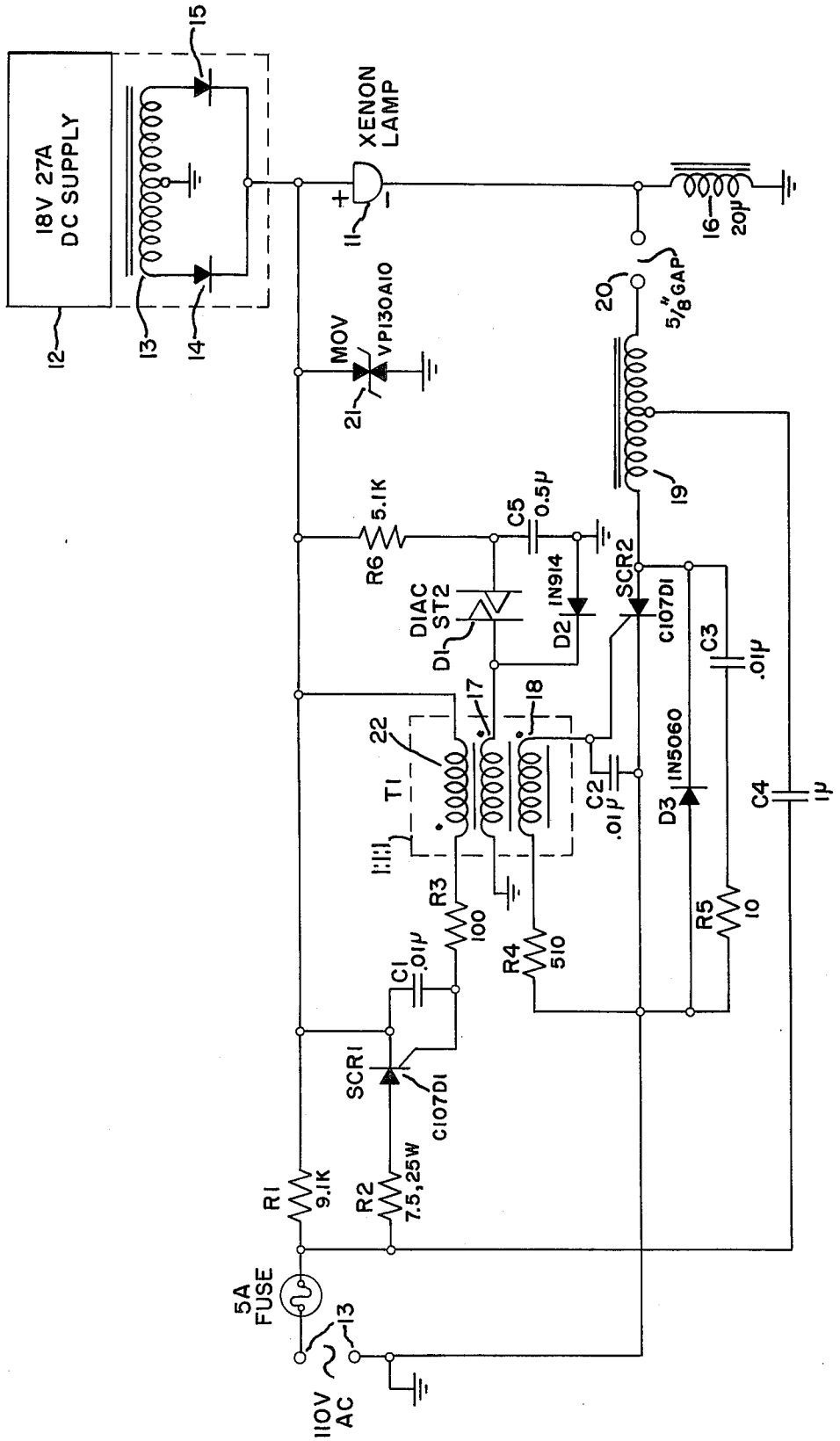
18V 27A
DC SUPPLY
XENON
LAMP
MOV
VP130A10
5/8" GAP
20μ
5.1K
R6
C5
0.5μ
DIAC
ST2
D1
IN914
D2
SCR2
C107D1
C3
.01μ
D3
IN5060
C4
1μ
T1
C2
.01μ
R3
100
R4
510
R5
10
C1
.01μ
SCR1
C107D1
R1
9.1K
R2
7.5,25W
5A
FUSE
110V
AC

POWER SUPPLY FOR A THERMIONIC EMISSION GAS DISCHARGE LAMP

BACKGROUND OF THE INVENTION:

1. Field of the Invention:

The present invention relates to power supplies for gas discharge lamps designed to provide three phases of electrical energization. In particular, such supplies are required to produce a high triggering potential in the many kilovolt range for initiating an electrical discharge in the gas; a warm-up voltage for transitioning the discharge from an ionization discharge to a thermionic discharge; and finally a low voltage at high current for sustained operation of the lamp. The invention relates to an implementation of such a power supply using silicon controlled rectifiers and other solid state devices as the principal active components.

2. Description of the Prior Art:

A lamp of the xenon arc variety is described in U.S. Pat. No. 3,364,374 entitled "Compact Source Lamp Having Electrode Construction Providing Arc Stabilization" assigned to the General Electric Company and the invention of John Wilson. The lamp appears with two electrodes or with a third electrode for starting. When a third electrode is employed, the magnitude of the required starting trigger pulse is substantially smaller. In addition, the lamp may be fabricated in a double enclosure wherein the inner enclosure contains xenon under greater than atmospheric pressure and wherein an outer enclosure is provided, which may contain an inert gas such as nitrogen. The latter enclosure may then be provided with an internal reflective coating for the purpose of aiding in the light gathering function. Pressurized lamps are often spoken of as having a "compact arc" because of the small size of the arc and its highly concentrated light output. A typical power level for such lamps is 500 watts.

The power supply requirements of gas discharge lamps such as the xenon arc lamps referred to above are well known. Lamps of this variety have activated cathodes, being operated in the thermionic emission mode. Thermionic emission is initiated after application of two diverse modes of preliminary energization. The first is a very sharp trigger pulse measured in kilovolts or tens of kilovolts for ionizing the gas. The second is the application of sufficient electrical energy to raise the temperature of the lamp electrodes to the point where thermionic emission begins. The operating d.c. supply provides the voltage and current required to operate the lamp in a steady state condition. In practice, power supplies have tended to be massive, particularly in respect to the warm-up feature, and have exerted very substantial thermal stresses and shocks upon the lamp during the heating process. Such power supplies have traditionally stored the electrical energy required to raise the lamp electrodes to thermionic temperature in a large capacitor, and have used a single discharge with peak powers of several kilowatts to bring the electrodes up to temperature. In order to store the amount of energy required for "one shot" warm-up operation, several thousand microfarads at a relatively high voltage have been required. In order to protect the lamp electrodes from too rapid a discharge, it is customary to provide large inductive units to stretch out the discharge to several milliseconds. Even so, the mechanical starting stresses due to thermal shock have been severe, and have been a cause of shortened lamp life and occasional catastrophic failure.

SUMMARY OF THE INVENTION:

The present invention has as an object to provide an improved power supply for a thermionic emission, gas discharge lamp.

It is another object of the present invention to provide a power supply for a gas discharge lamp avoiding the need for energy storage and using low cost electrical components.

It is still another object of the invention to provide a novel power supply for a gas discharge lamp wherein means have been employed to reduce the thermal stresses exerted on the lamp during the warm-up cycle.

The present invention has as another object an improved power supply of reduced complexity and imposing minimum stresses upon a thermionic gas discharge lamp during the starting cycle.

These and other objects of the invention are achieved in a combination comprising a source of a.c. line potentials, a source of low voltage, high current d.c. potentials adapted to be coupled to the lamp for sustained operation and a starter. The starter is coupled between the a.c. source and the lamp and provides a plural succession of high voltage trigger pulses for inducing a gas discharge and a corresponding succession of medium voltage power pulses in synchronism with the trigger pulses. The medium voltage power pulses, which occur at the line frequency rate, contain sufficient energy to gradually heat the lamp to thermionic emission temperature. The warm-up time normally varies from one-tenth to one-half second and the warm-up dissipation is less than the dissipation during normal operation.

The starter is further provided with interrogative control means responsive to the voltage drop in the lamp, which indicates its conductive state to deactivate the starter when thermionic emission has been established and to reactivate the starter if the lamp discharge is interrupted. The trigger pulses and the medium voltage warm-up pulses are synchronous with the source of a.c. potentials, the latter being portions of unfiltered halfcycles of the a.c. line voltage which are applied to the lamp in the same polarity as the operating source.

The control means comprises a resistance, a capacitance, and a negative resistance diac diode exhibiting breakdown, which are connected in a voltage dependent oscillatory configuration, the capacitor being recharged through the resistance at the line frequency to a value indicative of instantaneous lamp potential. The diac, which is connected in parallel with the capacitance, exhibits a voltage dependent negative resistance characteristic and produces a short pulse whenever the breakdown voltage is exceeded, having a breakdown voltage established below the higher voltage applied to the capacitor when the lamp is nonconductive but above the lower capacitor voltage indicative of the lamp's thermionically emissive state. When the lamp is being started, the diac breaks down at a point in each phase of the line voltage where its breakdown potential is exceeded and produces a short pulse discharging the capacitance. These occur in a succession in synchronism with the line frequency, continuing until the lamp potential has fallen below the diac breakdown point. Once stable operation has been established, if at any subsequent time the lamp discharge is terminated, the voltage across the lamp immediately climbs above the

diac breakdown potential and reinstitutes the starting pulses in performance of the interrogative function. A diode clamp in the diac output restricts the output pulses provided to the trigger and warm-up supplies to those produced during alternate (like polarity) phases of the line voltage. 1

In accordance with other aspects of the invention, the trigger voltage source consists of an ignition coil having a primary and a secondary circuit with a silicon controlled rectifier controlling the primary in response to the diac pulses. The medium voltage supply employs a second silicon controlled rectifier connected in series with the lamp and the a.c. source. A current limiting resistance is provided in series with the second silicon controlled rectifier to sustain the discharge as the lamp transitions through a wide voltage range from gas discharge to thermionic operation.

BRIEF DESCRIPTION OF THE DRAWING:

The novel and distinctive features of the invention are set forth in the claims appended to the present application. The invention itself, however, together with further objects and advantages thereof may best be understood by reference to the following description and accompanying drawing in which the figure is a circuit illustration of a power supply for a thermionic gas discharge lamp in accordance with the invention.

DESCRIPTION OF THE PREFERRED EMBODIMENT:

With reference to the figure, a starter circuit is shown designed for a xenon arc lamp **11.** The starter is intended as a part of a power supply system of which another principal part is the operating power supply **12.** The operating power supply provides 18 volts d.c. at 27 amperes, as required for operation of a 500 watt xenon arc lamp.

The operating d.c. power supply **12** is powered by an a.c. line source by connections not shown and delivers power through a transformer **13** to a pair of rectifiers **14** and **15.** The secondary winding of the transformer is center tapped, with the center tap being grounded and the winding ends being led to the anodes of rectifiers **14** and **15.** The cathodes of rectifiers **14** and **15** are joined and coupled to the positive terminal of the lamp **11.** The negative terminal of the lamp is led to ground through a choke **16** of suitably low d.c. impedance to conduct the heavy currents required to operate the lamp. The current path through the transformer secondary is completed through the rectifiers **14, 15,** the lamp **11** and the choke **16.** When the xenon arc lamp is operating normally, the power supply provides a positive voltage of from 15–20 volts at the positive terminal of the lamp at a regulated current level. Since the a.c. line voltage may appear across the rectifiers **14** and **15,** particularly during starting, they have a large inverse voltage rating (200 volts) and are further protected against transients by a metal oxide varistor **21** coupled between the d.c. output terminals.

The xenon arc lamp requires a "starter" which entails the two well-known preliminary phases of operation mentioned earlier. In the first or ignition phase, the gas between the electrodes of the lamp is ionized and a spark discharge initiated. This requires a high voltage on the order of several tens of kilovolts for a two terminal lamp. Once the spark discharge has occurred, the voltage drop across the lamp falls very rapidly to the order of 50 volts at a current increasing from milliamperes to a fraction of an ampere. The arc will extinguish at this point, unless power is available to sustain the arc at the required voltage and current.

In the second phase, transition from a gas discharge to a thermionic discharge takes place. The gas discharge will continue if suitably sustained by a second d.c. power source, and will gradually elevate the temperature of the electrodes. The cathode of the lamp is of thoriated tungsten so that once heated to an adequate temperature, thermionic emission will occur. As thermionic emission is approached, the voltage drop in the arc falls from about 50 volts to less than 20 volts and the average current at the same time continues to increase to about 7 amperes. Once the voltage required to sustain the arc has fallen below 20 volts, the low voltage high current operating supply can take over. The operating supply then completes the warm-up of the cathode to normal operating temperatures and provides the necessary 27 ampere current for stable lamp operation.

The circuitry illustrated in FIG. **1** performs the required starting functions. Like the operating power supply **12,** the starter is energized from a 110 volt unregulated a.c. source. It is coupled to the a.c. power input terminals at **13.** The starter is designed to provide the high voltage (30–50 kilovolt) transient for "igniting" the lamp and an intermediate, non-regulated voltage having a maximum value of about 150 volts. The intermediate voltage, whose average current is limited to about 7 amperes is designed to sustain the arc in the transistion to stable thermionic emission and serves to bring the electrodes up to temperature. Once stable thermionic emission has occurred and the lamp has reached a voltage drop of under 20 volts, the lamp starter is designed for automatic deactivation. The circuit is reactivated at any time the discharge is interrupted.

The starter circuit has three functional blocks; an interrogative control, which indicates the absence of lamp conduction by going into a pulse generating oscillation which continues until the lamp conducts, and the starting trigger and warm-up power supply which respond to these pulses.

The starter has as its principal components a pair of silicon controlled rectifiers (SCR1, SCR2), a diac D1, a pulse transformer T1 having three windings, an ignition coil with a spark gap, a metal oxide varistor (mentioned above), an inductor and sundry resistors, capacitors, and diodes which will be further identified as the description proceeds. The parts have been selected for low cost compatable with home equipment. The xenon arc lamp is intended for operation of projection optics such as the light valve projector for showing large screen television images.

The interrogative control means is a diac oscillator wherein a capacitance is recurrently charged through a resistance, and discharged by the diac when its breakdown potential is exceeded. The mechanism is used to start and reactivate the lamp if its operation is interrupted.

The control means circuit entails the resistances R1, R6, capacitor C5, diac D1, diode D2 and the primary winding **17** of the transformer T1. The resistance R1, R6 and the capacitor C5 are serially connected between the ungrounded a.c. input terminal and ground to provide an a.c. voltage division across the capacitor

and means for charging the capacitor at the line rate. The positive lamp terminal is connected to the junction of R1 and R6. The negative lamp terminal is returned to ground through choke 16. The diac D1, a negative resistance device exhibiting breakdown, is coupled in series with the primary winding of the transformer T1 in a path which shunts the capacitor C5. The diode D2 has its cathode connected to the ungrounded end of the transformer primary winding and its anode grounded. It is poled to suppress the application of negative-going pulses upon the primary winding of the transformer T1.

The diac oscillator produces a series of positive going pulses until the xenon arc lamp has transitioned to thermionic operation. When the starter circuit is energized from the a.c. source, the voltage on the capacitor C5 follows the line voltage variations with some phase shift, corresponding to the vector ratio of the capacitive reactance of the capacitor C5 to the complex impedance provided by R1, R6 and C5. The component values are chosen so that with the 110 volt source, a recurrent peak voltage of about 55 volts will appear across the capacitor C5 with each half cycle of the a.c. source (assuming that the xenon arc lamp is not operating and disregarding the effect of diac conduction).

The diac discharges the capacitor C5. The diac exhibits a negative resistance conduction characteristic when a voltage in excess of its breakdown value is applied. If this breakdown voltage is selected to be at about 30 volts, a value substantially beneath the 55 volts available from line voltage, the conditions for diac oscillation are established. Thus, during each half cycle that the xenon arc lamp remains unfired, the diac will go into a high conduction breakdown condition. Diac conduction causes the capacitor C5 to discharge very rapidly to produce a large, short duration current pulse through the primary winding of transformer T1. The diode D2 is poled to clamp negative going pulses applied to the primary winding of T1. Thus, only the positive going diac pulses are coupled into the primary of T1. These pulses are then used for control of the ignition and warm-up functions.

The diac oscillation ceases when the lamp ignites and has reached thermionic emission. As the lamp ingnites, the maximum a.c. voltage available across C5 falls from an initial value of about 55 volts to a value substantially below the 30 volts necessary to cause breakdown of the diac to an operating valve under 30 volts. When the voltage falls below the diac threshold, the diac will no longer fire and positive going trigger pulses are discontinued. Normally, the component values are adjusted so that the lamp will have achieved an average current level of about 7 amperes, corresponding to a substantial degree of thermionic conduction before diac oscillations are terminated.

As explained above, the diac oscillator produces a short pulse for each positive cycle of the 60 cycle a.c. input waveform during warm-up of the xenon arc lamp. The pulses are applied to the primary of transformer T1 to initiate the trigger and warm-up circuits in the starter.

The circuitry for responding to the control pulse and for developing the high voltage trigger includes a secondary winding 18 of the transformer T1, SCR2, tapped spark coil 19, spark gap 20, a high current ferrite core solenoid choke 16, metal oxide varistor 21, capacitors C2, C3, C4 and resistors R4 and R5.

The trigger circuit is connected as follows. Secondary winding 18 of transformer T1 has one terminal connected to the gate of SCR2. The other winding terminal is connected through R4 to ground. The cathode of SCR1 is also grounded. A high frequency by-pass condensor C2 is connected between the gate and cathode of SCR2. The anode of SCR2 is coupled to one end of the primary of the tapped spark coil 19 with the tap at the other end of the primary being coupled through capacitor C4 to the ungrounded 110 volt a.c. input terminal. The high voltage secondary terminal on the spark coil is connected to one electrode of the spark gap 20, with the other spark gap electrode being connected to the negative lamp terminal. This negative lamp terminal is also connected to the ungrounded terminal of the choke 16. The positive lamp terminal is connected to ground through metal oxide varistor 21. A diode D3 is provided connected in shunt between the principal electrodes of SCR2 and reversely poled in respect to the SCR. Finally, a high frequency parasitic suppression circuit is provided consisting of resistance R5 and capacitor C3 in series, the two being connected in shunt with the principal electrodes of SCR2.

The trigger circuit functions as follows. The secondary winding 18 receives a sharp positive transient on alternate half cycles of the input a.c. waveform. This transient is applied between the gate and the cathode of SCR2 so as to cause it to conduct. The principal electrodes of SCR2 are serially connected with capacitor C4 and the primary of spark coil 19 to control the application of current from the a.c. supply. Thus, when SCR2 becomes conductive, a large current pulse flows through the primary circuit of the spark coil, generating a 30–50KV voltage transient at its output terminal. The high voltage transient causes a spark discharge which jumps the gap 20, set at about 5/8 of an inch for an air gap, to the negative terminal of the xenon lamp. The choke 16 has a substantial inductive impedance (typically, 20 μ henries of inductance) so that the transient is not dissipated through the inductor. Instead, a breakdown occurs in the lamp between its negative and positive terminals, the positive terminal being grounded through the varistor 21. The varistor breaks down at approximately 200 volts, and completes the secondary circuit of the spark coil. The voltage of the spark coil is set large enough to always cause breakdown of the lamp, and thus initiates the first phase of operation.

The circuitry used to apply the intermediate "warm-up" potential includes resistances R2, R3, a silicon controlled rectifier SCR1, capacitor C1 and secondary winding 22 of transformer T1. The circuitry applies electrical energy to the lamp on alternate half cycles of the a.c. waveform to sustain the arc in its transition from an ionization gas discharge to a thermionic discharge.

The silicon controlled rectifier SCR1 controls the application of these intermediate potentials to the lamp. A current limiting resistance R2 is coupled between the ungrounded a.c. source terminal and the anode of the SCR1. The cathode of SCR1 is led to the positive lamp terminal. The negative lamp terminal is led through choke 16 to ground. The inductance, which has a low impedance for d.c. and 60-cycle power, completes the current path for the application of intermediate potentials to the lamp. The gate of the SCR is connected through resistance R3 serially connected with the sec-

ondary winding **22** of **T1** to the positive lamp terminal. The RF by-pass capacitor **C1** shunts the gate and cathode electrodes of **SCR2.** When a pulse appears on the primary **17** a triggering potential is developed at the gate of the silicon controlled rectifier **SCR1,** turning it on sharply. Thus, assuming a controil pulse in the primary **17** on each half cycle of the a.c. source is available, the SCR will be turned on each alternate half cycle and will extinguish at the end of that cycle. Thus, as the ignition sequence is repeated, the temperature of the lamp electrodes will be gradually elevated to a temperature at which thermionic emission takes place. The amount of current that is available from the supply is established by the resistance **R2** and is set at typically 7 amperes average current for a normal 110 volt a.c. line input. The line input voltage is unregulated, however, it is capable of supplying a comparable current over a wide lamp voltage range (20–100 volts) to sustain the arc until full thermionic operation has taken place.

The control network continuously monitors the potentials across the terminals of the lamp. Thus, it starts the lamp when the line potentials are first applied to the lamp when the unlighted lamp potentials are higher than if the lamp were lighted. If the lamp fails after starting, and the lamp potential returns to its high initial value, the starter restarts the lamp. Since the starter control network is always responsive to the lamp voltage, it may be regarded as performing an interrogative control function. In the event that there is a circuit or lamp failure causing a prolonged succession of starts, a 5 ampere fuse is provided to protect the **SCR1** and serial resistance **R2** from destruction.

The component values and suitable types of semiconductor devices of a specific supply are illustrated in the drawing. The precise values are in part dependent on the requirements of the lamp and the foregoing devices are optimized for that application.

The size of the diac capacitor **C5** is chosen so that it will charge to a potential large enough to trigger the diac and store enough energy to fire the SCRs at a 60 cycle rate. The capacitor value is selected with respect to the serial resistances (**R1, R2**) so that the firing point of the diac oscillator will occur at the proper phase of the a.c. line waveform. Since both the trigger and warm-up supplies respond to the same control pulse, the actual firing point of the oscillator is a compromise between the conflicting requirements of the warm-up and trigger sources. The two pulses must occur in substantial coincidence, since the trigger generated arc will be extinguished if the warm-up potential is not also present to sustain the arc. To get a maximum trigger voltage, one would prefer to delay the firing instant to about 90° phase shift. To get a maximum amount of warm-up effect, one would prefer to place the triggering pulse early in the conduction cycle so that most of the rectified line waveform is available. A compromise of about 45°–65° delay is customary.

The lamp requirements may vary as between two and three electrode varieties which have differing triggering requirements. The timing of the diac pulse will also depend upon that need, and the economics of increasing the step up ratio of the spark coil.

While the capacitor **C5** does store charge, the charge is only that required to turn on the gates of SCR1 and SCR2 and does not directly energize the xenon lamp itself nor appreciably load the power supply. The SCR1 connects the lamp terminals through the resistance **R2** to the line terminals and the warm-up heating is provided in this path from the a.c. line. The application of warm-up energy to the lamp is thus one in which the input energy is unfiltered and the need for large capacitance or inductance elements is avoided.

The voltage setting at the sensor for turn off (the diac breakdown voltage) is typically 30 volts. The xenon arc follows an erratic path after initial triggering as the electrode potential falls very rapidly from a large initial value to an intermediate value. The intermediate values are unstable and generally lie in the range of between 55 and 30 volts. They tend to fall in an erratic manner to below 20 volts as the electrodes heat up. In the warm-up process the arc potential stabilizes with the onset of thermionic operation. Depending upon the lamp and its ambient conditions, the stable point may be reached after as few as two or three trigger pulses or as many as a dozen or more.

The voltage setting of the diac, however, is not critical so long as it turns off the starter once the lamp has transitioned into the stable condition and is low enough to give a substantial probability that the arc potential will fall to a potential that the d.c. power supply **12** can maintain. The 10 volt interval between the potential of the operating supply and the diac setting is an adequate guard against component and ambient condition variation.

The embodiment illustrated in the Figure is subject to appreciable variation depending on application requirements and economics. For instance, instead of transfomer coupling, the pulse transformer **T1** may be replaced by capacitive coupling. The use of a pulse transformer, however, appears to be preferable from a reliability standpoint since the winding inductance (55 mh) serves to "stretch out" the diac pulses and insures more positive starting of the SCRs.

A second variation is one wherein the warm-up supply functions on a full wave rather than on a half wave basis. In the present configuration, SCR1 functions on alternate cycles and applies alternate half cycles to the lamp. One may use a full wave SCR configuration instead. The resultant polarity applied to the lamp should be of the same polarity as the voltage from the d.c. supply **12.** The advantage of the half wave arrangement lies in its simplicity and low cost.

The selection of a low voltage, high current d.c. supply may also be made consistent with the principles of high efficiency and low cost, enunciated in connection with the warm-up supply. In particular, the lamp will normally be found to function effectively with a full wave output having minimum filtering, selected such that the ripple amplitude is sufficiently low and the frequency sufficiently high to prevent modulation of the light output. The filtering provided by the 20 μ henry serial choke **16** in the present configuration is adequate at a high frequency switching rate of 7000 H_z or greater.

What we claim as new and desire to secure by Letters Patent of the United States is:

1. A power supply for a gas discharge lamp, stably operating in a thermionic emission mode, comprising:

a. an input source of a.c. line potentials,

b. a pair of output terminals of respectively positive and negative polarity required for connection to the anode and cathode of a gas discharge lamp,

c. a source of low voltage, high current d.c. potentials for sustained lamp operation, connected to one of said output terminals in said required polarity,

d. a starter connected to said a.c. source for energization and whose output is connected to said output terminals, said connections being maintained during starting and sustained operation, said starter comprising:

means connected to the other of said output terminals for generating a plural succession of high voltage trigger pulses for inducing a gas discharge in said discharge lamp,

means connected to said one output terminal for generating a corresponding plural succession of unidirectional medium voltage heating pulses in synchronism with said trigger pulses, said heating pulses being applied in said required polarity and occurring at a rate and in sufficient energy to heat the lamp gradually to thermionic emission temperature, and

interrogative control means coupled to said one output terminal for sensing the voltage drop across said lamp during starting and sustained operation, said control means being responsive to the lamp voltage drop to discontinue the generation of said triggering and heating pulses when thermionic emission has been established and to recontinue said generation of triggering and heating pulses when an interruption of the lamp discharge occurs.

2. A power supply as set forth in claim **1** wherein said trigger pulses and said medium voltage pulses are synchronous with said source of a.c. potentials.

3. A power supply as set forth in claim **2** wherein said medium voltage pulses are portions of unfiltered half-cycles of said a.c. source applied to said lamp in like polarity to said low voltage source.

4. A power supply as set forth in claim **3** wherein said starter control means comprises a resistance, a capacitance, and a negative resistance diac diode exhibiting breakdown which are connected in a voltage dependent oscillatory configuration, said capacitor being recharged through said resistance at the line frequency to a value indicative of the instantaneous lamp potential, said diac diode being coupled across said capacitor to discharge said capacitor and provide a short output pulse upon breakdown, said diac having a breakdown potential established below the higher voltage applied to the capacitor when the lamp is non-conductive, but above the lower capacitor voltage indicative of the lamp's thermionically emissive state.

5. A power supply as set forth in claim **4** wherein said starter control means comprises an output load circuit for said diac including a diode clamp to suppress output pulses on alternate half cycles of the a.c. source.

6. A power supply as set forth in claim **5** wherein the trigger voltage supply of said starter comprises an ignition coil having a primary and a secondary circuit, a first silicon controlled rectifer connected to close said primary circuit in response to said diac pulses, and said secondary winding being coupled to apply said high voltage trigger pulses to said lamp.

7. A power supply as set forth in claim **6** wherein the medium voltage supply of said starter comprises a second silicon controlled rectifier connected in series with said lamp to said a.c. source to apply portions of like polarity half cycles of said a.c. source to said lamp in response to said diac pulses.

8. A power supply as set forth in claim **7** wherein a current limiting resistance is provided, coupled in series with said second silicon controlled rectifier of said medium voltage supply to provide an output current to sustain the discharge during transition from a gas discharge to a thermionic discharge.

9. A power supply as set forth in claim **8** wherein said diac output load circuit comprises a pulse transformer whose primary winding is coupled to said diac, and having a pair of secondary windings coupled respectively to the gate of said first and second silicon controlled rectifiers.

10. A power supply as set forth in claim **1** wherein said medium voltage supply applies less average energy to said lamp during warm-up than said low voltage d.c. supply applies in stable operation so as to minimize thermal shock and stress upon said lamp.

* * * * *