May 2, 1967 E. F. BRUNING 3,317,220

RELEASABLE FLUID COUPLING

Filed April 15, 1963 2 Sheets-Sheet 1

FIG. 1.

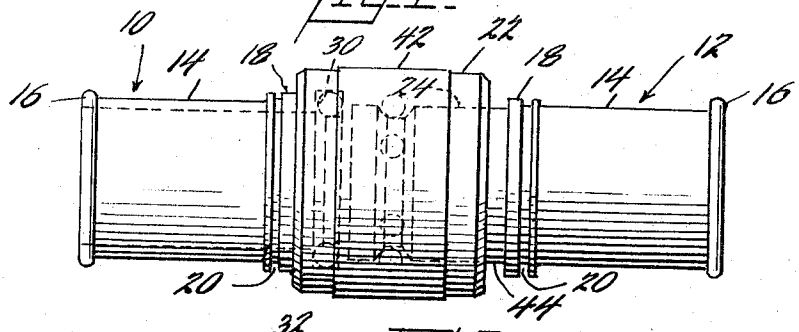

FIG. 2.

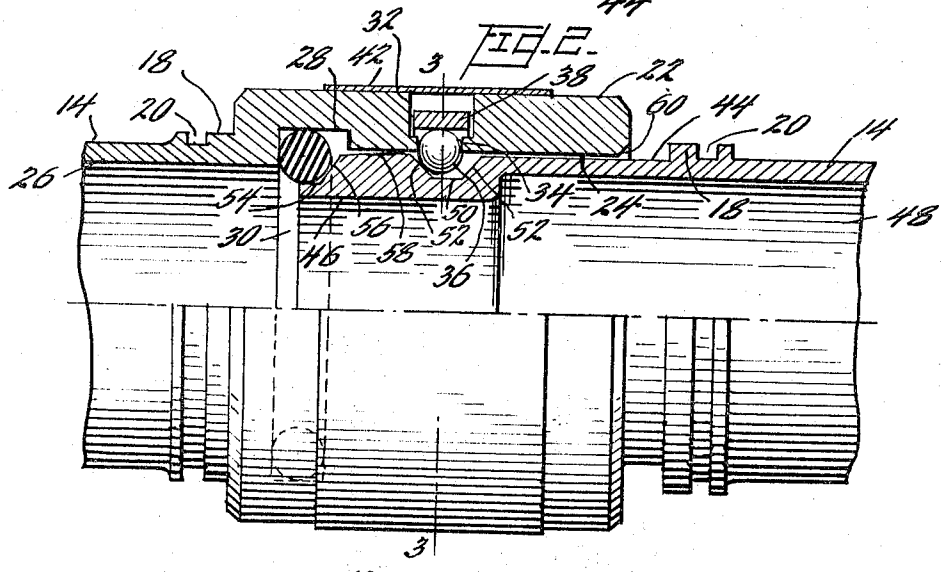

FIG. 3.

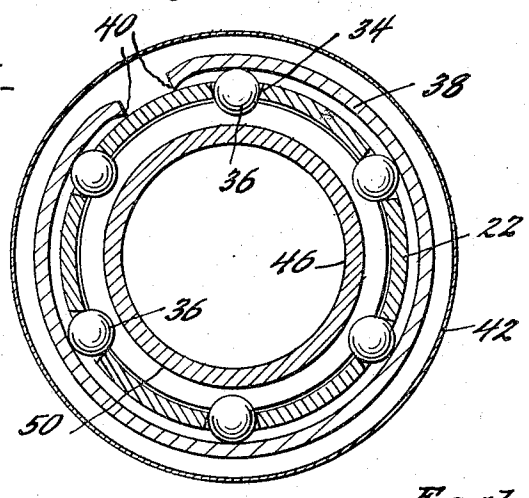

INVENTOR

Earl F. Bruning,

BY Parker and Walsh.

ATTORNEYS

May 2, 1967 E. F. BRUNING 3,317,220

RELEASABLE FLUID COUPLING

Filed April 15, 1963 2 Sheets-Sheet 2

FIG. 4

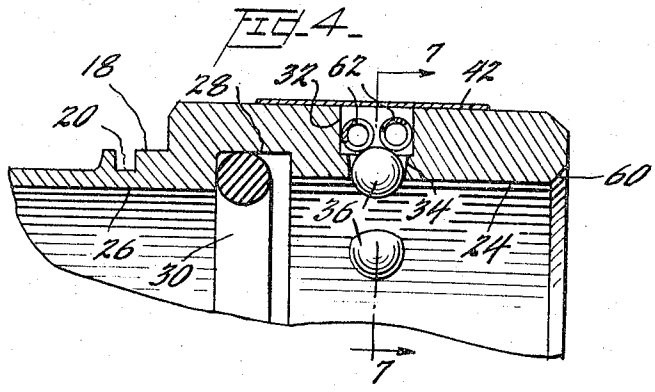

FIG. 5

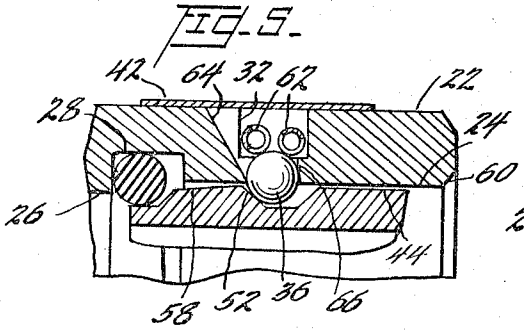

FIG. 6

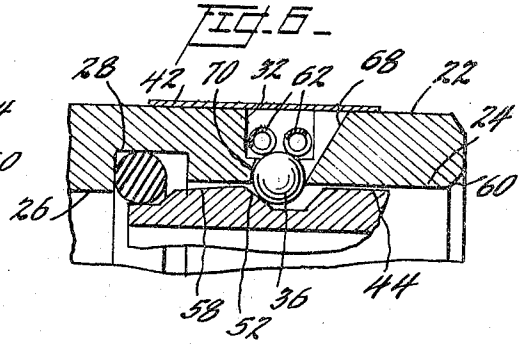

FIG. 7

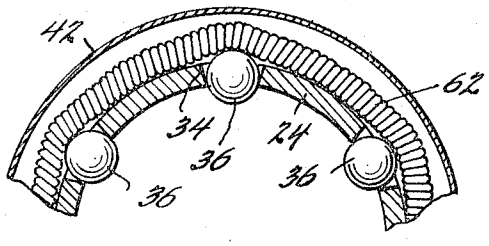

INVENTOR

Earl F. Bruning,

BY Parker and Wheeler

ATTORNEYS

United States Patent Office 3,317,220 Patented May 2, 1967

3,317,220

RELEASABLE FLUID COUPLING

Earl F. Bruning, P.O. Box 147,
Lincoln, Nebr. 68501

Filed Apr. 15, 1963, Ser. No. 272,921
2 Claims. (Cl. 285—1)

This invention relates to fluid couplings, and in particular to those of the quick-connect, quick-disconnect type. Although the preferred embodiment employed herein for illustrative purposes is primarily intended for use in conducting gases, such as air or oxygen, in resuscitation work, it is also applicable to systems involving liquid flow, where quick action with positive sealing is requisite.

Basically the invention contemplates a coupling including a female member having radial bores and spring-pressed locking spheres, for cooperation with a male member having an annular channel to receive the spheres in locking relationship, against axial movement. Devices of this general nature have been proposed heretofore, but they have been complex and cumbersome, with an excessive number of distinct parts, and correspondingly expensive, difficult of manufacture, assembly and maintenance, and lacking in reliability as to performance.

It is therefore a principal, and general object of the invention to provide an axial-thrust coupling, with spring-biased spherical detents, which has a minimum of parts, and is therefore less complex than devices of this sort heretofore known.

Another object is to provide a coupling as aforesaid, in which the spring bias is applied on a peripheral line, outwardly of the detents, and a related object is to provide a pair of endless coil springs so arranged in respect to the detents as to provide favorable distribution of forces, in respect to the overall problem of connecting and disconnecting. More particularly, it is an object to provide endless coil, compression springs, in pairs, in surrounding relation to the ball detents.

Yet another object is to provide for differential resistance in the detents, for varying the relative ease of connecting and disconnecting. In still greater particular, it is an object to provide differential resistance in the detents by preferential sloping of the said radial bores, which hold and guide the detents.

These and other objects, which will be apparent, are attained by the present invention, a preferred form of which is described in the following specification, as illustrated in the drawing, in which:

FIGURE 1 is a side elevational view of the coupling components, fully joined, with interior mechanism indicated in broken lines;

FIGURE 2 is a view similar to FIGURE 1, on enlarged scale, shown in cross section for 90° about the axis;

FIGURE 3 is a transverse, cross sectional view, taken on the plane of the line 3—3 of FIGURE 2;

FIGURE 4 is a fragmentary, sectional view of a female component, showing a modified, holding spring for the ball detents;

FIGURES 5 and 6 are views similar to FIGURE 4, showing modified guide bores for the ball detents; and

FIGURE 7 is a sectional view, taken on the line 7—7 of FIGURE 4.

Referring to the drawings by characters of reference, there is shown, in FIGURES 1 and 2, a coupling system comprising a female, tubular component **10** and a male, tubular component **12**, each comprising a cylindrical portion **14**, an outer terminal, peripheral bead **16**, and an inner collar, or flange, **18**, having an annular channel **20**, the beads, collars and channel all cooperating in holding

a rubber hose or the like in fluid-sealing relationship, as understood in the art.

Contiguous with the collar **18** of the component **10**, the latter has an enlarged, outer sleeve or head, **22**, the inner surface **24** of which is of somewhat greater diameter than the main bore **26** of component **10**, in order to provide end sealing for the male component, as will be seen.

Near the inner end of the sleeve or head **22**, its inner surface **24** is provided with an annular channel, or groove, **28**, accommodating an O-ring **30**, which cooperates with the male component to provide the fluid seal.

The head **22**, which extends an appreciable distance, radially, beyond flange **18**, has, medially its longitudinal extent, an annular channel **32**, with side walls perpendicular to the axis of the coupling tube. Equidistantly spaced about channel **32** are six bores **34**, which are arranged generally radially of tthe tube, and communicate from the channel to the interior of the tube, but which are actually slightly frusto-conical, and are sized to hold detent balls **36**, so that they protrude into the innterior of the tube, but to hold them at a position with slightly less than half the ball extending into the tube. The balls are retained in this inner position by a peripheral, spring keeper, and in the embodiment shown in FIGURES 1–3, the keeper consists of a split ring, or band, **38**, of spring material. It will be noted from FIGURE 3, that the keeper spring has radially inturned ends **40** which prevent peripheral movement of the spring to any extent which would uncover any of the balls **36**. The parts are further retained against loss by means of a ring-form band **42** arranged in overlying relation to channel **32**, and welded, brazed or soldered in place, and also serving to protect the channel against entry of dirt or other foreign matter.

Forwardly of the flange **18**, the male component **12** has an exterior surface **44**, sized for a smooth, sliding fit in the surface **24** of component **10**, and at its forward end, this portion of the male component has an internally extending, thickened, end portion **46**, of narrower bore than its main, interior surface **48**. Outwardly of the thickened portion **46**, the male component is provided with an annular channel **50**, for receiving the detent balls **36**, and as shown, these channels are trapezoidal in cross section, with outwardly diverging side walls **52**, adapted to cam the balls **36** radially outwardly on relative axial movement of the coupling components. For cooperation with the O-ring **30**, the male component **12** has a reduced outer end **54**, bounded inwardly by a slanting, side wall **56**, which has a camming action on the ball detents during joining of the parts. Between wall **56** and channel **50**, the outer wall of male component **12** is tapered, as at **58**, in order to more readily effect the telescopic insertion, and to this end, the end of the female component is also bevelled, as at **60**, on its inner corner. Slant section **58** also results in more gradual lifting of the ball detents upon joining the parts, at a phase of the cycle when spring pressure is greatest.

From the foregoing, the operation will be obvious. In order to effect a coupling, it is only necessary to bring the parts together, during which both slant sections **56** and **58** cooperate with bevelled corner **60** to cause a quick and sure guidance of the parts to coupled position. During this movement, the ball detents **36** are urged radially outwardly, against the pressure of split band **38**, and as the outer end of the male component **12** comes into sealing engagement with O-ring **30**, the balls **36** are urged radially inwardly by the spring, to a seat in groove **50**. Thus locking is effected by the simple, relative, axial movement of the parts, with no moving parts involved other than the detent balls and the spring band.

For withdrawal of the parts, the action is simply reversed. With outward pull on the parts, the balls are

cammed outwardly, against the spring pressure, by the innermost of the slant walls **52**, and the parts come apart freely, after which the balls are returned to inward position by the spring, in readiness for the next coupling action.

The holding power of the ball detents, or conversely, the readiness with which the parts may be separated, will depend upon the slant of wall **52**, which will offer increasing resistance to separation as the angle with the radial direction diminishes. In the event that quick-connection is desired, the walls **56**, **58**, will be suitably slanted to this end, and wall **52** may, in this case, be arranged for greater resistance to separation. In most cases, however, ready coupling will be desirable, and the wall **52** will be arranged for easy or difficult separation as required by a particular situation.

The modification shown in FIGURES 4 and 7 differs from that in FIGURES 1–3 solely in the retaining spring means, which, in this case, comprises a pair of endless coil springs **62**, or garter springs, as they are called. Other than the springs, everything in FIGURES 4 and 7 is the same as in FIGURES 1–3, and the parts are therefore indicated, in each case, by the same reference numerals.

In the modifications shown in FIGURES 5 and 6, the frusto-conical ball seat is tilted so as to coact with the cam surfaces on the male component in determining the degree of ease of coupling, or separation, as the case may be. Thus, if ease of coupling is desired, the form shown in FIGURE 5 may be used. Here, the ball seat in the female component, while retaining its frusto-conical form, to hold the ball captive, is slanted, as a whole, with respect to a plane perpendicular to the tube axis, so that part of it penetrates the sleeve **22** inwardly of the channel **32**, as at **64**, while the opposite side **66** terminates within the base of channel **32**. In this case, it will be seen that upon approach of the parts, the ball **36** readily moves along part **64** of its conical seat, in response to the camming action of slant faces **56** and **58** of the male component. However, upon attempted withdrawal, the side **66** of the seat opposes, rather than assists outward movement of the ball, and as a result, withdrawal is relatively difficult. In this action, the radial lines in the ball to the points of tangency on side **66** and on surface **52** form an obtuse angle, and the limiting value of this angle is 180°, at which value the moving force and the resisting force are directly opposed, one to the other. The situation is exactly the reverse in FIGURE 6, wherein the outer side **68** of the conical seat is slanted in the opposite direction, so that separation of the parts is facilitated, and the other side, **70**, of the seat opposes movement of the parts to coupled position. In these modifications, the dual garter spring has an added significance in that that it has separate application to the two distinct patterns of forces involved. This, among other things, affords a further range of design of resistance in the coupling-uncoupling action.

While a certain, preferred embodiment has been shown and described, various modifications will be apparent, in the light of this disclosure, and the invention should not, therefore, be deemed as limted, except insofar as shall appear from the spirit and scope of the appended claims.

I claim:

1. A tubular coupling comprising female and male components, said female component having a radially enlarged outer end portion with an annular channel in its outer surface, said channel having a series of peripherally spaced passages opening into the channel and into the interior of said female component, said passages converging in diameter in an inward direction, the slant of the walls, with respect to a plane perpendicular to the tubular axis, being greater toward the outer end of the female component than toward the inner end of the female component, a sphere in each passage having a diameter intermediate the maximum and minimum diameters of the passage, spring means of circular form arranged in said channel, in surrounding relation to said spheres, collectively, to retain said spheres in said passages, and a male component having a radially inwardly thickened, outer end portion, having an outer, annular channel with at least one slanted side wall, adapted to receive inwardly extending portions of said spheres.

2. A tubular coupling comprising female and male components, said female component having a radially enlarged outer end portion with an annular channel in its outer surface, said channel having a series of peripherally spaced passages opening into the channel and into the interior of said female component, said passages converging in diameter in an inward direction, the slant of the walls, with respect to a plane perpendicular to the tubular axis, being greater toward the inner end of the female component than toward the outer end of the female component, a sphere in each passage having a diameter intermediate the maximum and minimum diameters of the passage, spring means of circular form aranged in said channel, in surrounding relation to said spheres, collectively, to retain said spheres in said passages, and a male component having inwardly thickened, outer end portion, having an outer, annular channel with at least one slanted side wall, adapted to receive inwardly extending portions of said spheres.

References Cited by the Examiner

UNITED STATES PATENTS

1,593,791	7/1926	Butler	285—102
2,069,377	2/1937	Matthiessen	285—315 X
2,452,430	10/1948	Clark et al.	285—304
2,473,973	6/1949	Scheiwer	285—313 X
2,536,702	1/1951	Scheiwer	285—1 X
2,560,263	7/1951	Wiegand et al.	285—281 X
2,642,297	6/1953	Hanna	285—304
2,666,656	1/1954	Bruning	285—1 X
2,674,469	4/1954	Earle	285—1 X
2,699,961	1/1955	Omon et al.	285—1 X
2,860,893	11/1958	Clark	285—1

CARL W. TOMLIN, *Primary Examiner.*

THOMAS F. CALLAGHAN, EDWARD C. ALLEN, *Examiners.*

R. SCOTT, *Assistant Examiner.*