US 20190059817A1

(19) United States

(12) Patent Application Publication (10) Pub. No.: US 2019/0059817 A1

HENDERSON et al. (43) Pub. Date: Feb. 28, 2019

(54) **SENSING GUIDEWIRE WITH INTEGRATED PROXIMAL LOCKING FEATURE**

(71) Applicant: **KONINKLIJKE PHILIPS N.V.**, Eindhoven (NL)

(72) Inventors: **Eric HENDERSON**, Escondido, CA (US); **David BURKETT**, Panama City Beach, FL (US)

(21) Appl. No.: **16/118,393**

(22) Filed: **Aug. 30, 2018**

**Related U.S. Application Data**

(60) Provisional application No. 62/552,993, filed on Aug. 31, 2017.

**Publication Classification**

(51) **Int. Cl.**

| | |
|---|---|
| ***A61B 5/00*** | (2006.01) |
| ***A61B 5/0215*** | (2006.01) |
| ***A61M 25/09*** | (2006.01) |

(52) **U.S. Cl.**

CPC ..... ***A61B 5/6851*** (2013.01); ***A61B 5/02158*** (2013.01); *A61B 8/0891* (2013.01); *A61B 5/02152* (2013.01); ***A61M 25/09*** (2013.01)

(57) **ABSTRACT**

Intravascular devices, systems and methods of fabricating the same are provided. In one embodiment, an intravascular system includes an intravascular guidewire that includes a flexible elongate member having a proximal portion and a distal portion, at least one electronic component secured to the distal portion of the flexible elongate member, and a locking section integral with a metal core of the flexible elongate member at the proximal portion of the flexible elongate member. The metal core has a first diameter. The locking section includes a first subsection and a second subsection. The first subsection has a second of diameter smaller than the first diameter and the second subsection transitions between the first diameter and the second diameter.

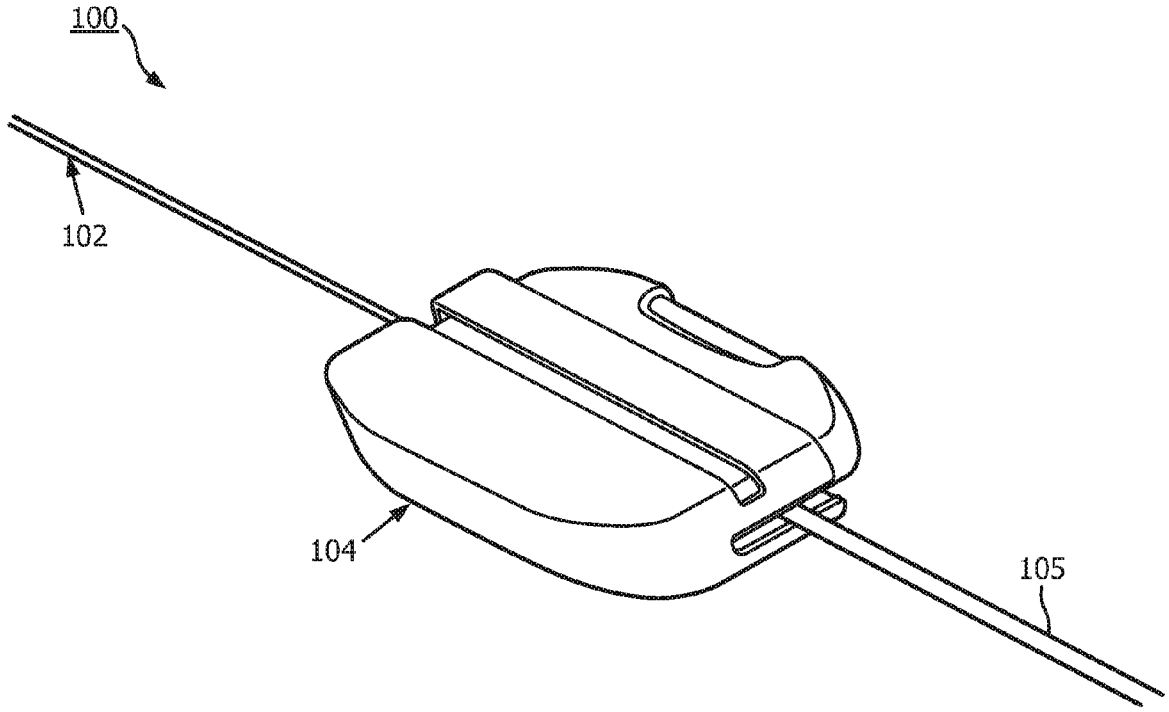

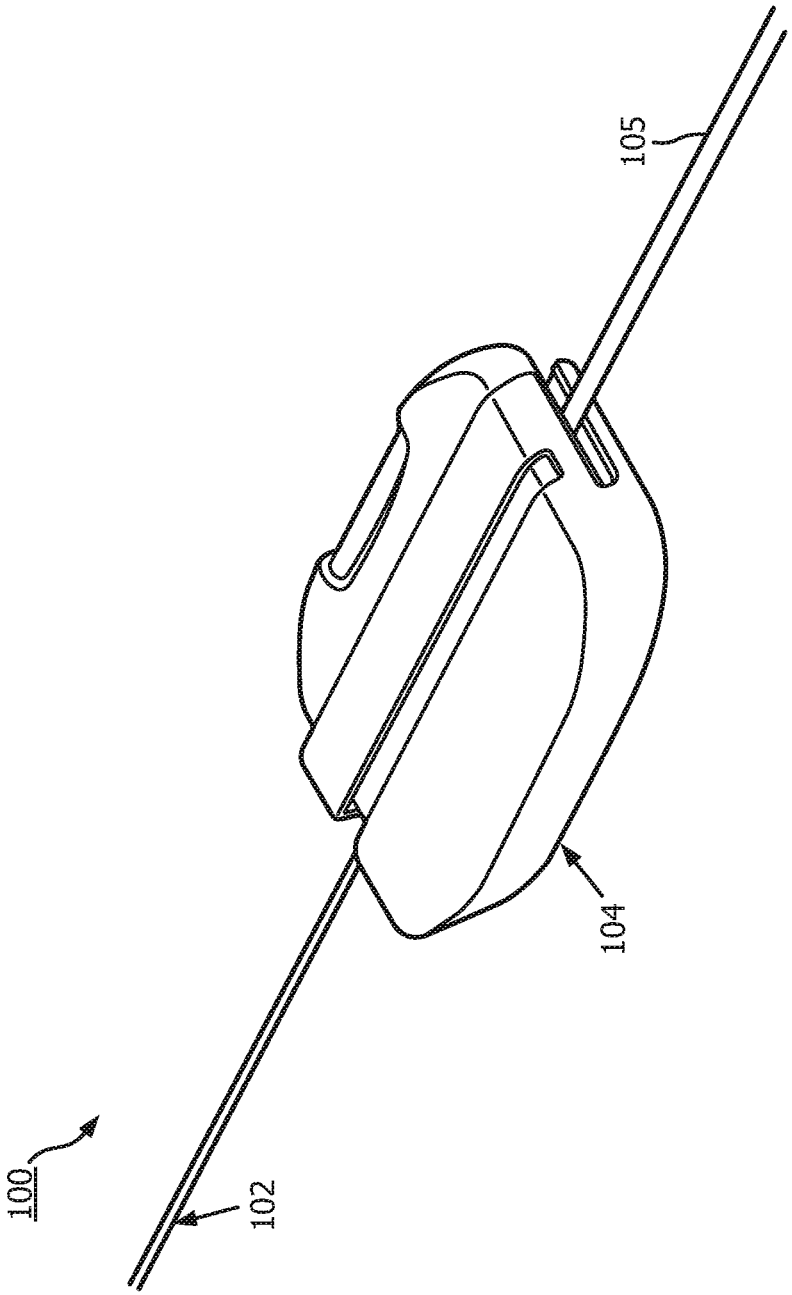


FIG. 1

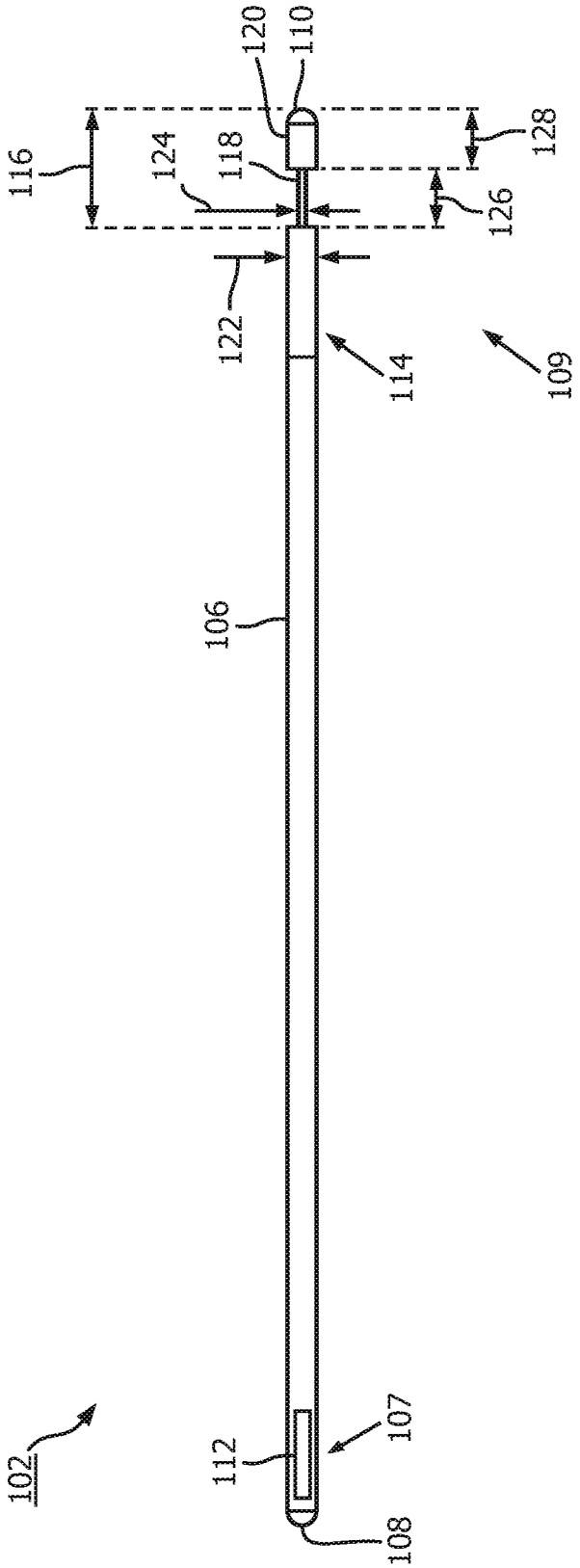


FIG. 2

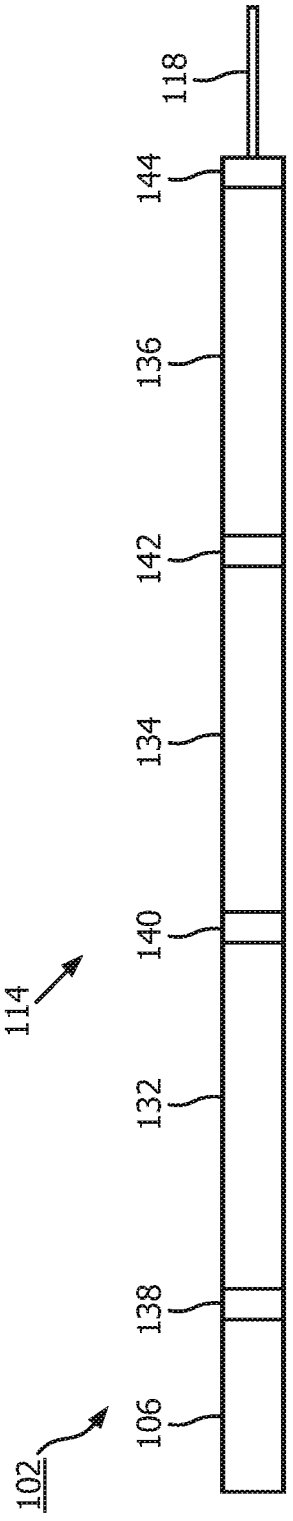
102
106
138
132
140
114
134
142
136
144
118

FIG. 3

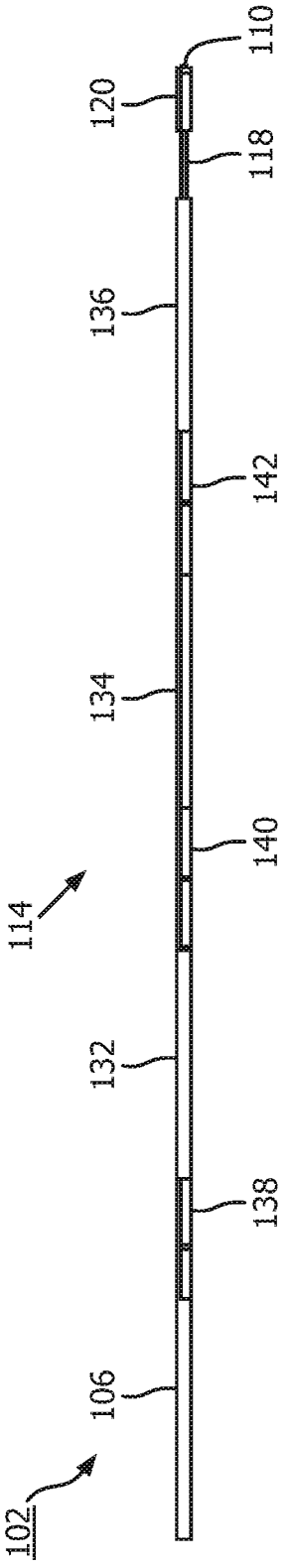
102
106
132
138
114
134
140
136
142
118
120
110

FIG. 4

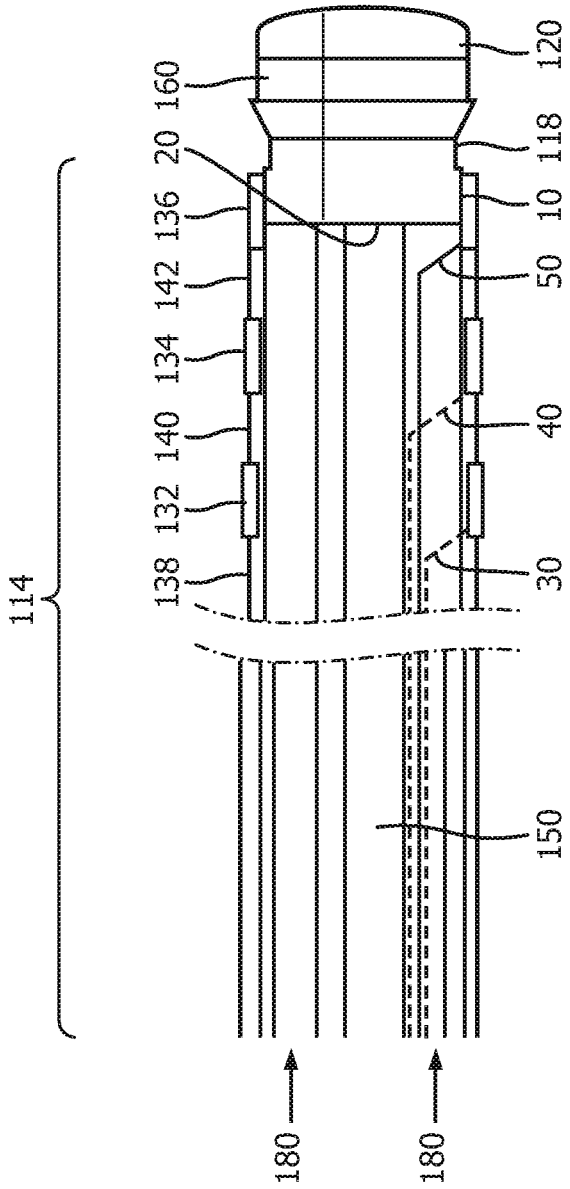


FIG. 5

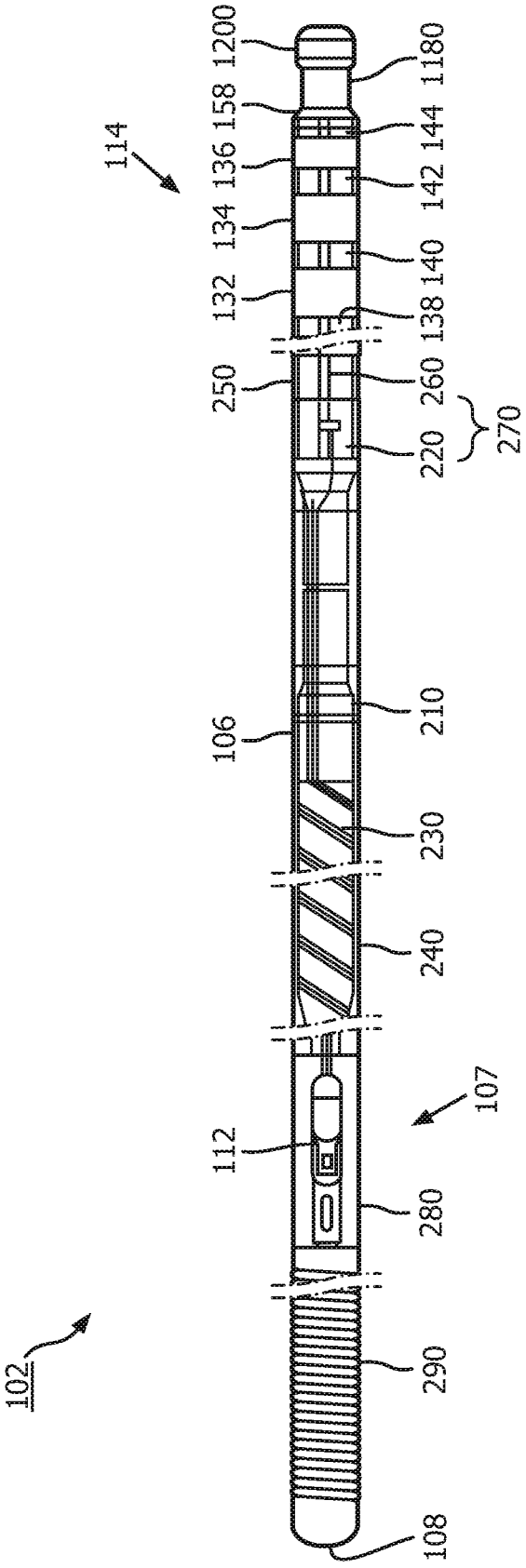
1200
1180
158
144
114
136
142
134
140
132
138
250
260
270
220
106
210
230
240
107
112
280
102
290
108

FIG. 6

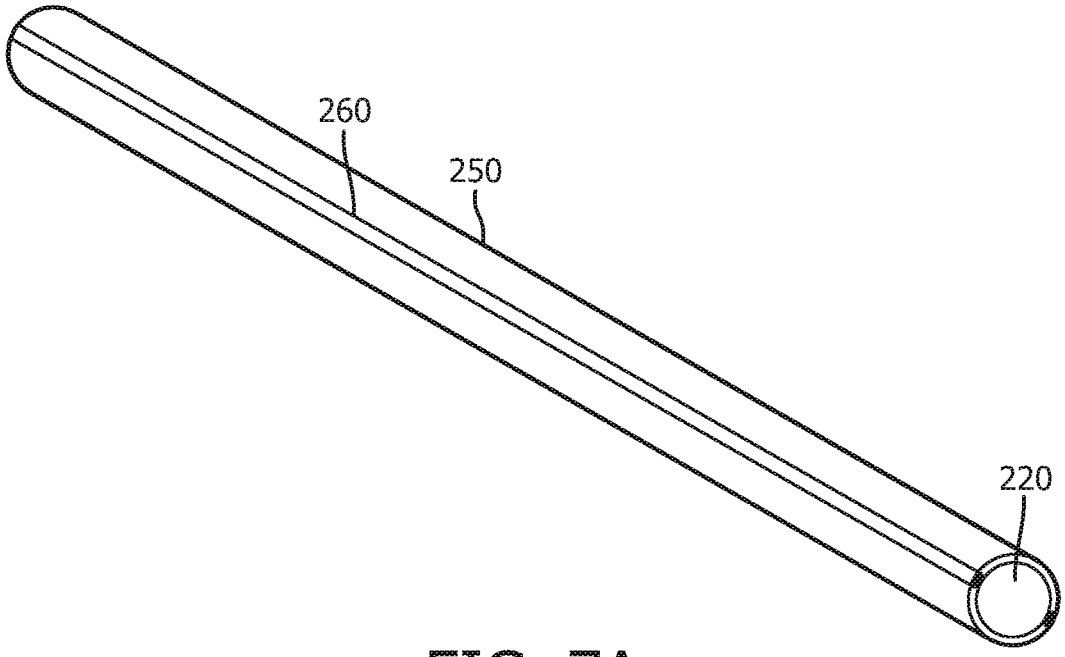


FIG. 7A

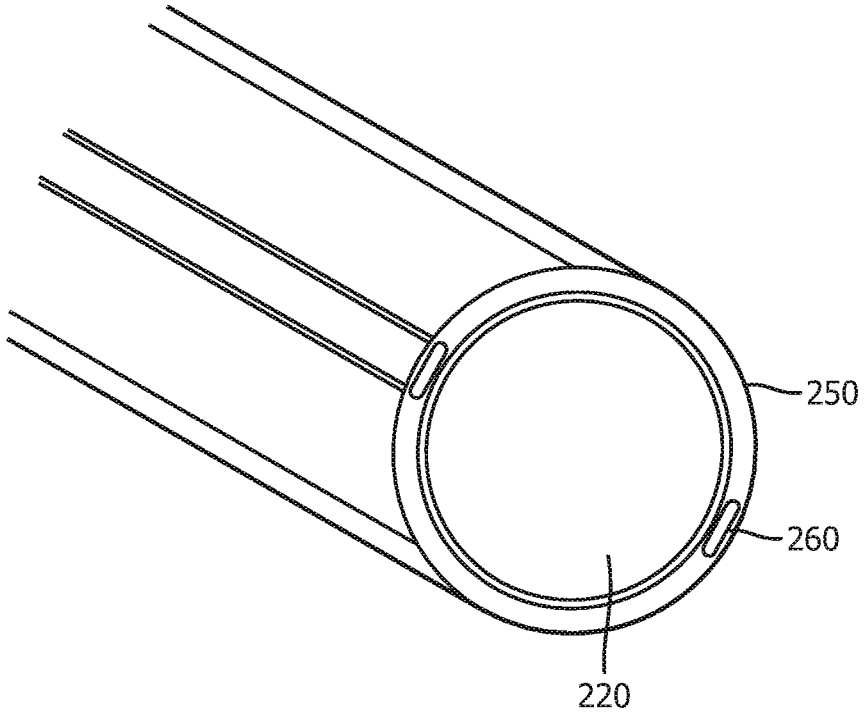


FIG. 7B

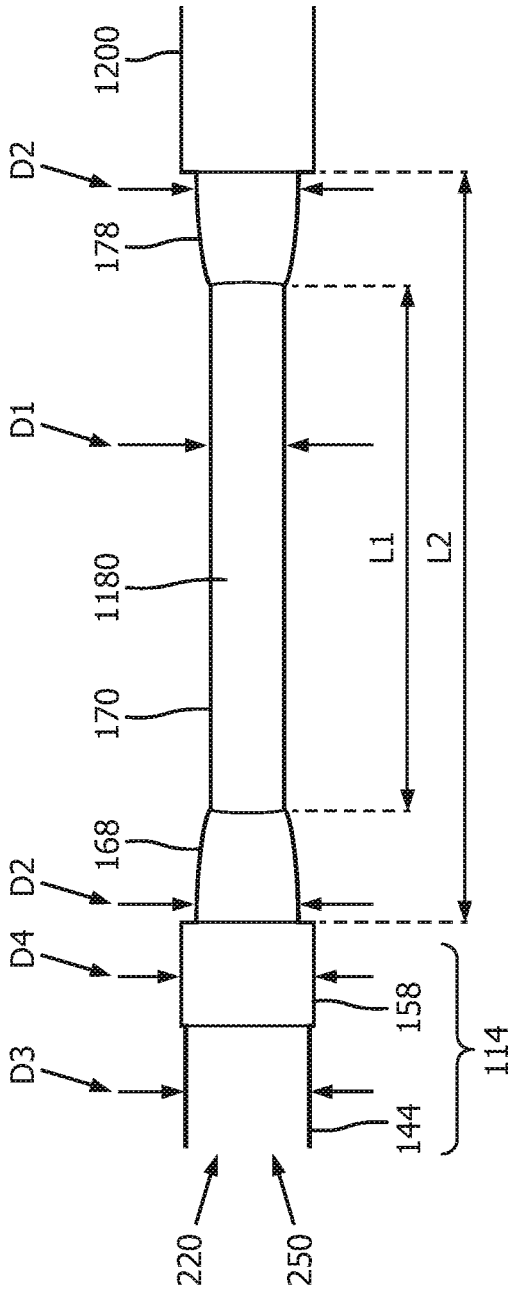
1200
D2
178
D1
1180
170
168
D2
D4
D3
158
144
114
L1
L2
220
250

FIG. 8A

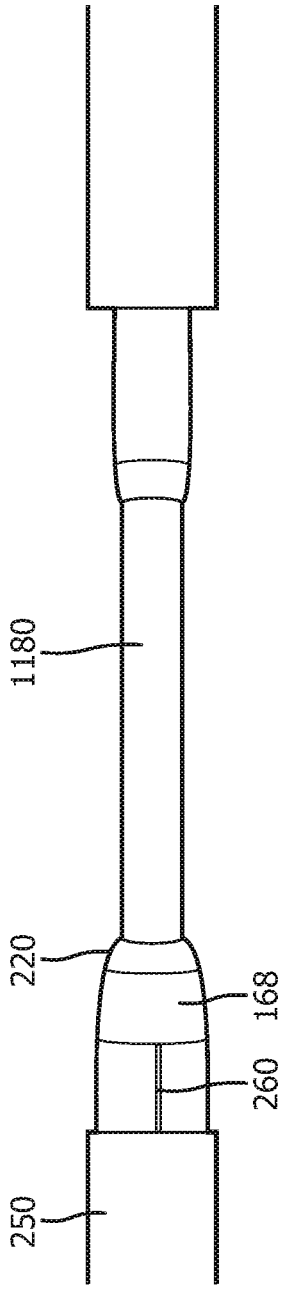
1180
220
168
260
250

FIG. 8B

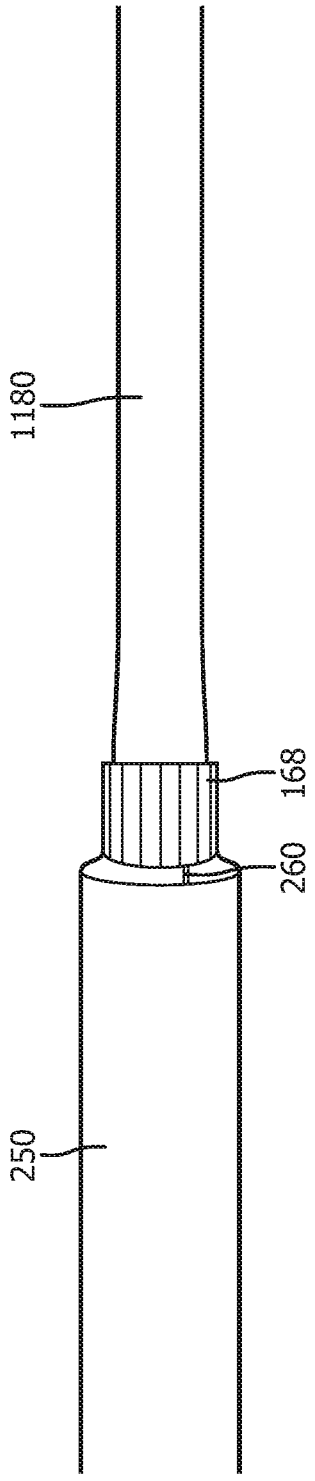


FIG. 8C

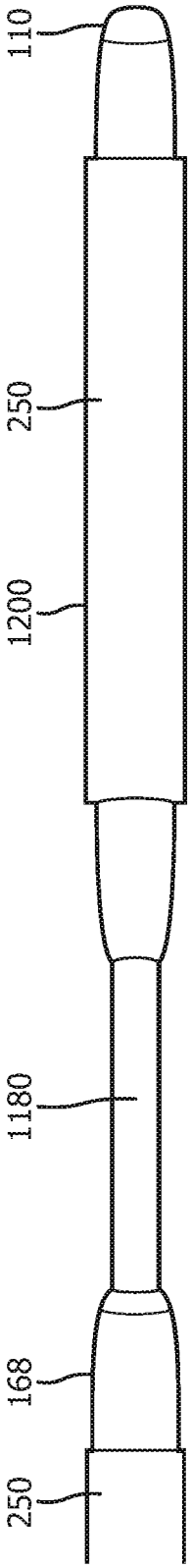


FIG. 8D

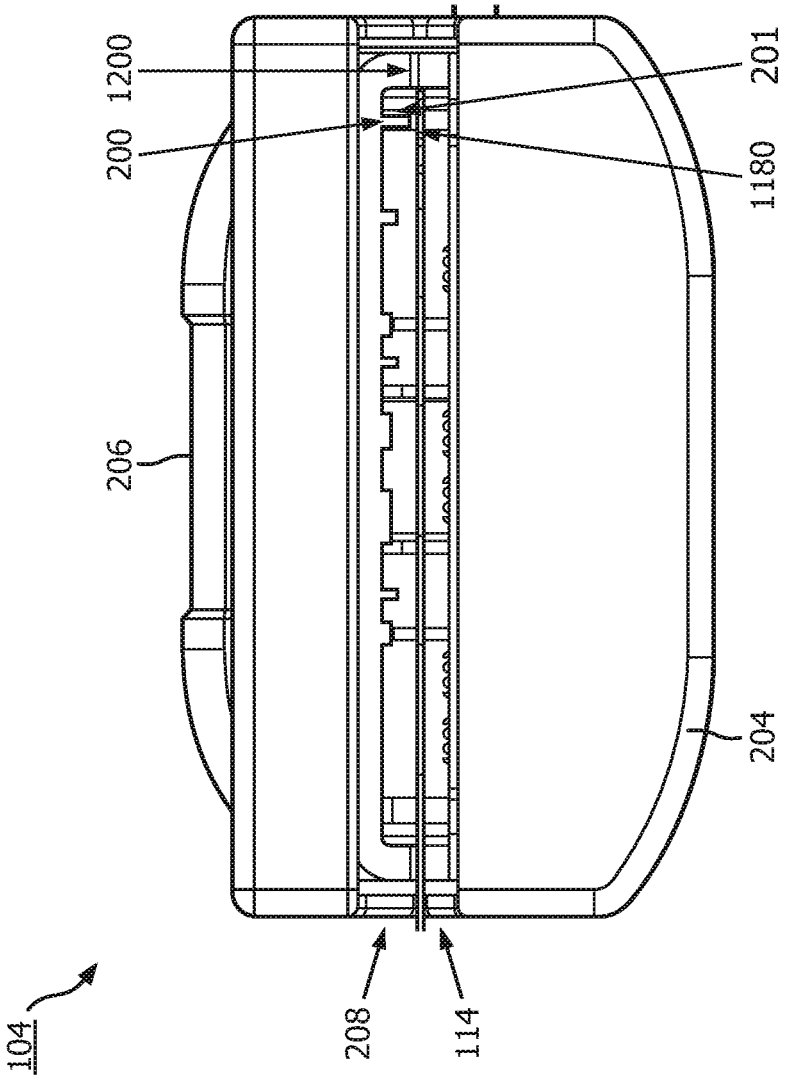


FIG. 9

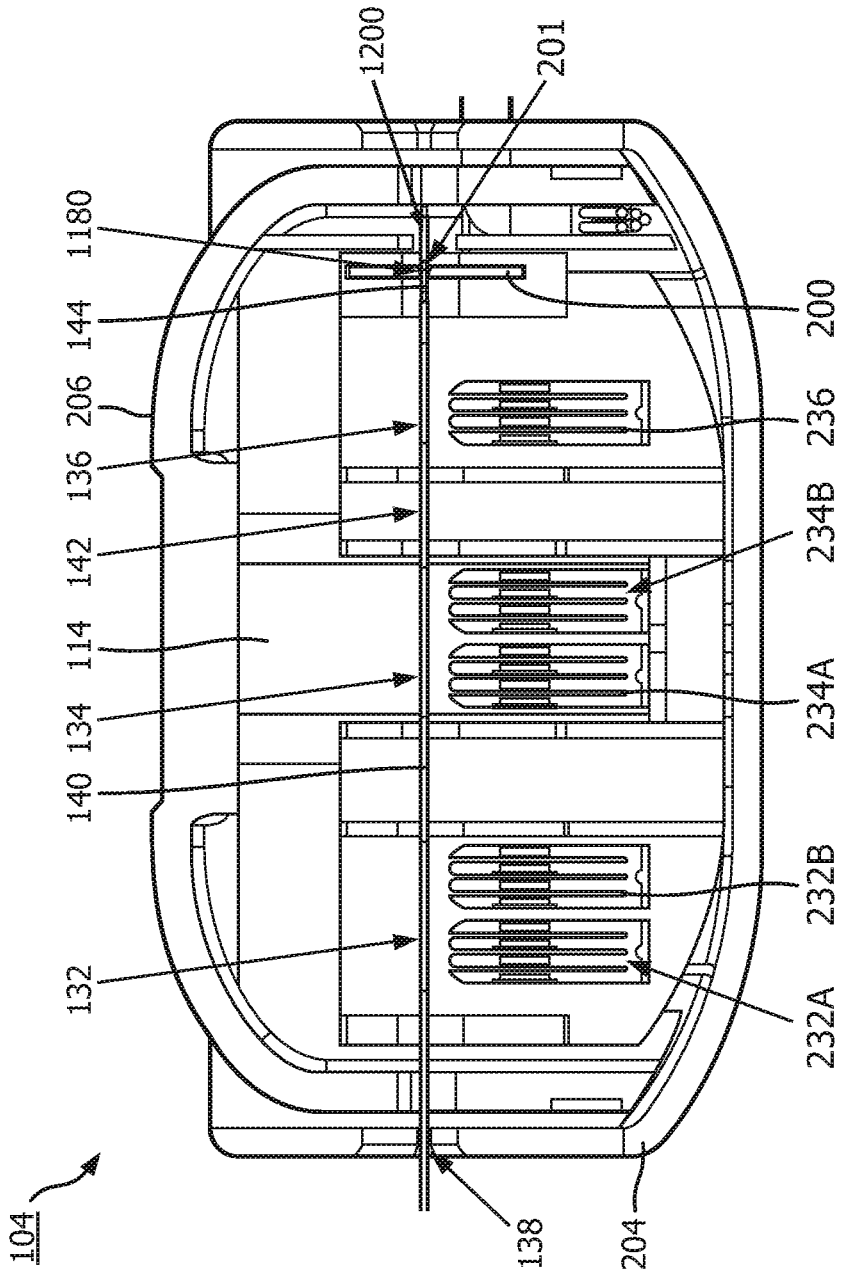
1200
201
1180
144
206
136
142
114
134
140
132
104
138
204
200
236
234B
234A
232B
232A

FIG. 10

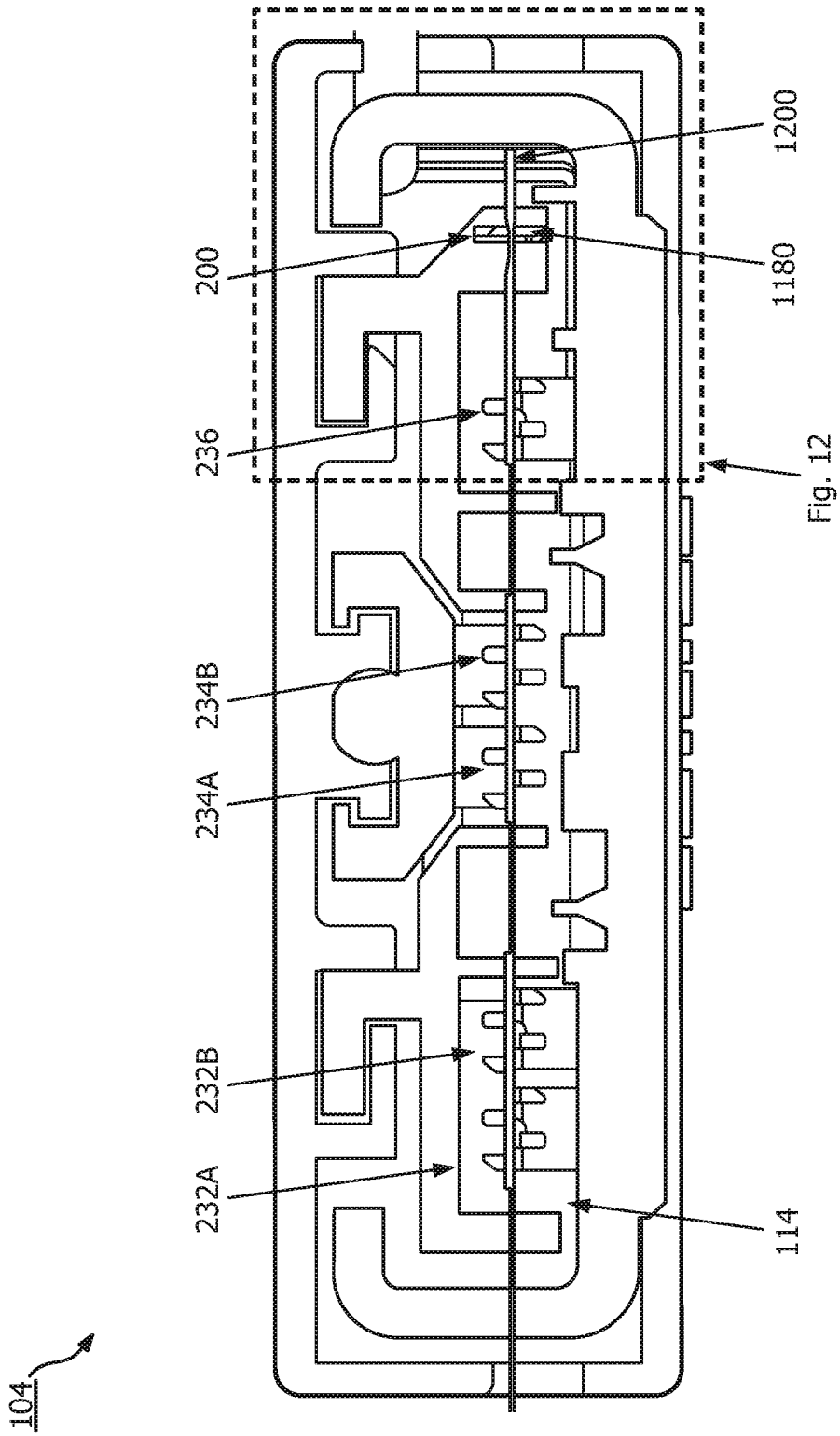


FIG. 11

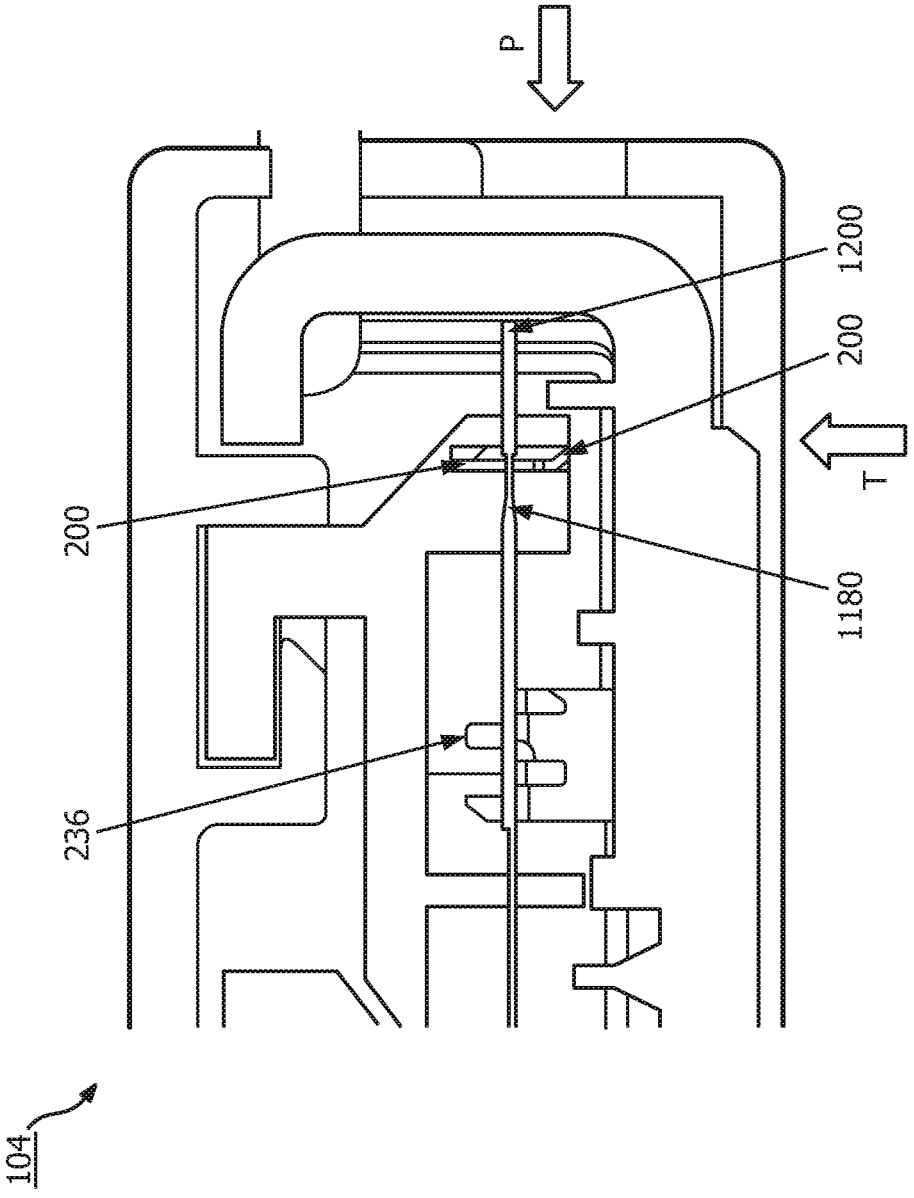


FIG. 12

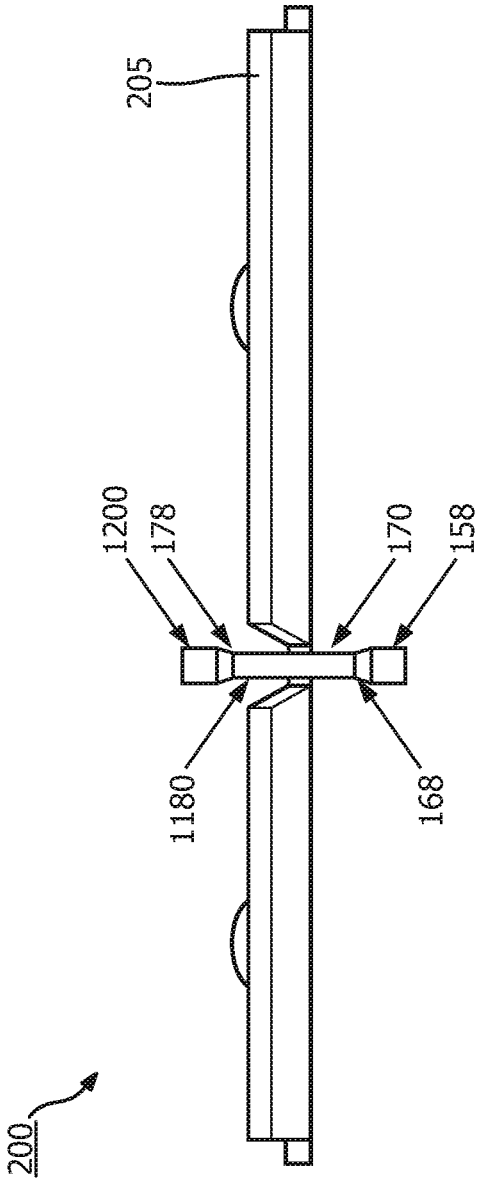


FIG. 13

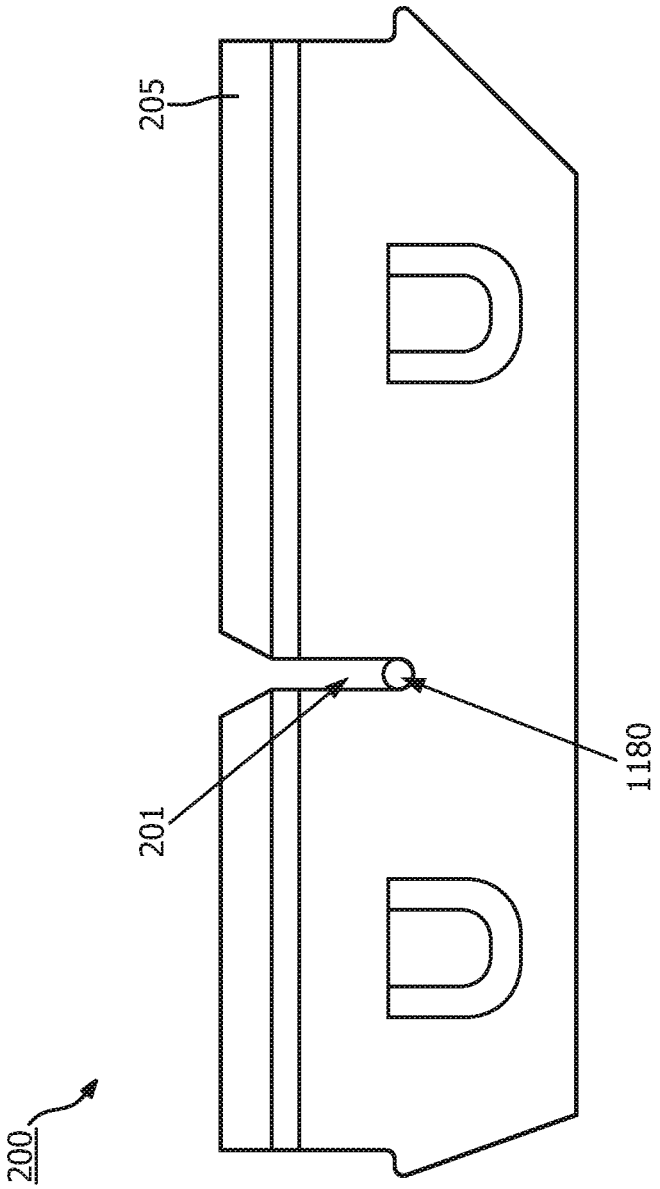


FIG. 14

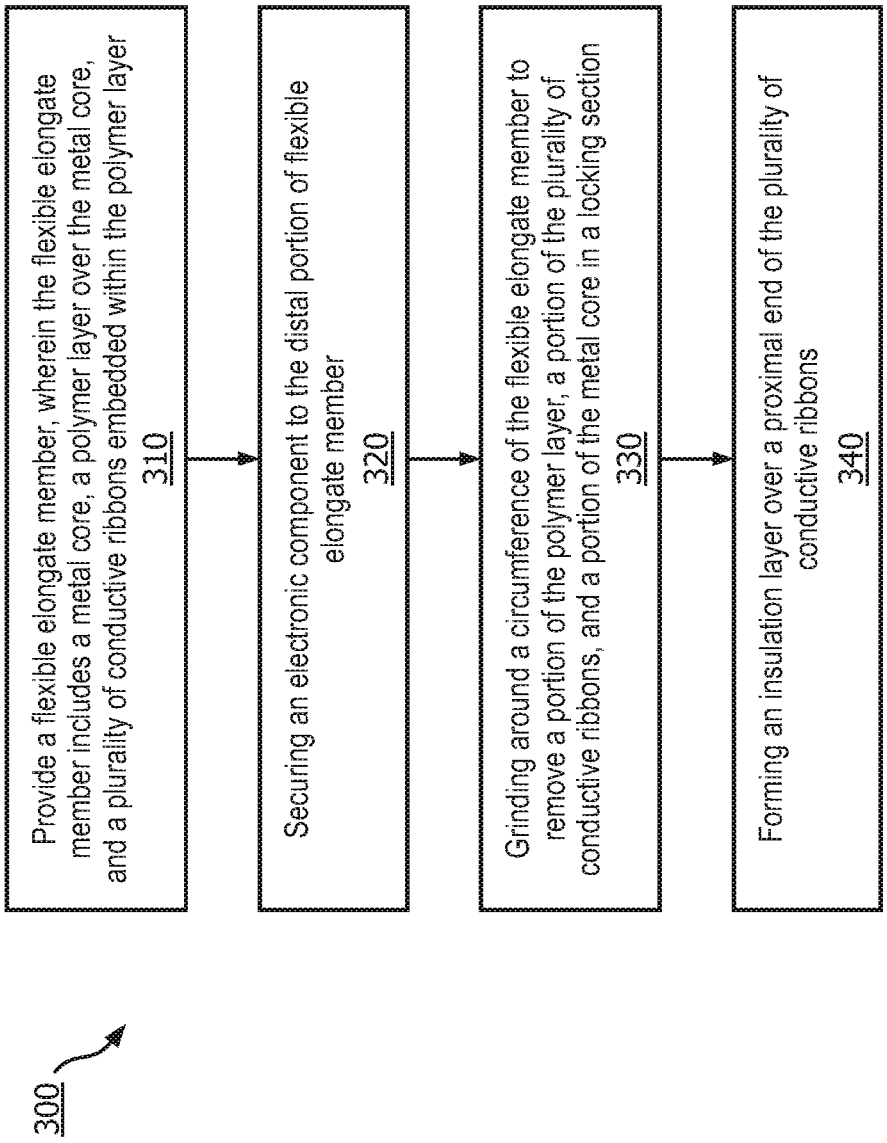
300
Provide a flexible elongate member, wherein the flexible elongate member includes a metal core, a polymer layer over the metal core, and a plurality of conductive ribbons embedded within the polymer layer
310
Securing an electronic component to the distal portion of flexible elongate member
320
Grinding around a circumference of the flexible elongate member to remove a portion of the polymer layer, a portion of the plurality of conductive ribbons, and a portion of the metal core in a locking section
330
Forming an insulation layer over a proximal end of the plurality of conductive ribbons
340

FIG. 15

# SENSING GUIDEWIRE WITH INTEGRATED PROXIMAL LOCKING FEATURE

## TECHNICAL FIELD

**[0001]** The present disclosure relates to intravascular devices, systems, and methods. In some embodiments, a guidewire includes a metal core with an integrated locking feature.

## BACKGROUND

**[0002]** Heart disease is very serious and often requires emergency operations. A main cause of heart disease is the accumulation of plaque inside the blood vessels, which eventually occludes the blood vessels. Common treatment options available to open up the occluded vessel include balloon angioplasty, rotational atherectomy, and intravascular stents. Traditionally, surgeons have relied on X-ray fluoroscopic images that are planar images showing the external shape of the silhouette of the lumen of blood vessels to guide treatment. Unfortunately, with X-ray fluoroscopic images, there is a great deal of uncertainty about the exact extent and orientation of the stenosis responsible for the occlusion, making it difficult to find the exact location of the stenosis. In addition, though it is known that restenosis can occur at the same place, it is difficult to check the condition inside the vessels after surgery with X-ray.

**[0003]** A currently accepted technique for assessing the severity of a stenosis in a blood vessel, including ischemia causing lesions, is fractional flow reserve (FFR). FFR is a calculation of the ratio of a distal pressure measurement (taken on the distal side of the stenosis) relative to a proximal pressure measurement (taken on the proximal side of the stenosis). FFR provides an index of stenosis severity that allows determination as to whether the blockage limits blood flow within the vessel to an extent that treatment is required. The normal value of FFR in a healthy vessel is 1.00, while values less than about 0.80 are generally deemed significant and require treatment.

**[0004]** Often intravascular guidewires are utilized to measure the pressure within the blood vessel. For a guidewire equipped with a pressure sensor, segments of electrical contacts are usually arranged at the proximal portion of the guidewire. Proper alignment between electrical contacts of a connector and the electrical connects at the proximal portion of the guidewire are necessary to ensure reliable electrical connection.

## SUMMARY

**[0005]** Embodiments of the present disclosure provide an improved intravascular system having an intravascular guidewire and a connector. The guidewire includes a flexible elongate member with a metal core. The flexible elongate member includes a locking section at a proximal portion of with a reduced diameter. The locking section is integral with the metal core and is formed by machining a portion of the metal core. An electronic component, such as a pressure sensor is located at the distal portion of the flexible elongate member. The connector includes a locking clip with a slit sized and shaped to receive the locking section at the proximal portion of the guidewire. Advantageously, the locking section can be received within the slit in the locking clip to ensure reliable electrical connection between conductive portions of the flexible elongate member and conductive contacts in the connector. In addition, as the locking section is integral with the metal core, it is less prone to failure, thus reducing possibility of having undesirable relative movement between the flexible elongate member and the connector.

**[0006]** In one embodiment, an intravascular system includes an intravascular guidewire that includes a flexible elongate member having a proximal portion and a distal portion, at least one electronic component secured to the distal portion of the flexible elongate member, and a locking section integral with a metal core of the flexible elongate member at the proximal portion of the flexible elongate member. The metal core has a first diameter. The locking section includes a first subsection and a second subsection. The first subsection has a second of diameter smaller than the first diameter and the second subsection transitions between the first diameter and the second diameter. In some embodiments, the proximal portion terminates at a proximal end that includes a first diameter. In some instances, the flexible elongate member further includes a polymer layer over the metal core and a plurality of conductive ribbons embedded within the polymer layer.

**[0007]** In some implementations, the proximal portion of the flexible elongate member includes an insulation layer formed over a proximal portion of the plurality of conductive ribbons. The insulation layer is distal to the locking section. In some other implementations, the proximal portion of the flexible elongate member includes a conductive portion in communication with one of the plurality of conductive ribbons. In some instances, the conductive portion includes a conductive ink. In other instances, the conductive portion includes a metal ring. In some embodiments, the metal core includes an electrical ground for the electronic component. In some embodiments of the intravascular system, the locking section further comprises a third subsection. In those embodiments, the first subsection is between the second subsection and the third subsection. The second subsection includes a first taper, with a distal end of the first taper having the second diameter and a proximal end of the first taper having the first diameter. The third subsection includes a second taper, with a distal end of the second taper having the first diameter and a proximal end of the second taper having the second diameter. In some other embodiments, the intravascular system further includes a connector for coupling to the proximal portion of the flexible elongate member. The connector includes a locking clip having a slit sized and shaped to receive the locking section of the flexible elongate member. In those embodiments, the locking clip includes a top portion tilting proximally at a tilt angle.

**[0008]** In yet another embodiment, a method of fabricating an intravascular guidewire is provided. The method includes providing a flexible elongate member having a proximal portion and a distal portion, wherein the flexible elongate member comprises a metal core and a polymer layer over the metal core, the metal core having a first diameter; securing at least one electronic component to the distal portion of the flexible elongate member; and forming a locking section in the proximal portion of the flexible elongate member by machining around a circumference of the flexible elongate member to remove a portion of the polymer layer and a portion of the metal core in the locking section. In some instances, the flexible elongate member further comprises a plurality of conductive ribbons embedded within the poly-

mer layer. In some embodiments, forming the locking section further includes machining around a circumference of the flexible elongate member to remove a portion of the plurality of conductive ribbons in the locking section. In some other embodiments, the method further includes forming an insulation layer over a proximal portion of the plurality of conductive ribbons, where the insulation layer is distal to the locking section. In some implementations, the method also includes removing a portion of the polymer layer over a conductive portion of the flexible elongate member such that one of the plurality of conductive ribbons is exposed, the conductive portion being adjacent to the locking section; and forming a conductive layer over the exposed conductive ribbon. In some instances, the conductive layer includes a conductive ink. In other instances, the conductive layer includes a metal ring. In some embodiments, the method further includes machining a first subsection of the locking section until the first subsection has a second diameter smaller than the first diameter; and machining a second subsection such that the second subsection transitions between the first diameter and the second diameter.

**[0009]** Additional aspects, features, and advantages of the present disclosure will become apparent from the following detailed description.

## BRIEF DESCRIPTION OF THE DRAWINGS

**[0010]** Illustrative embodiments of the present disclosure will be described with reference to the accompanying drawings, of which:

**[0011]** FIG. **1** is a diagrammatic perspective view of an intravascular system, according to aspects of the present disclosure.

**[0012]** FIG. **2** is a diagrammatic side view of an intravascular device of the intravascular system of FIG. **1**, according to aspects of the present disclosure.

**[0013]** FIG. **3** is a diagrammatic side view of a proximal connection portion of an intravascular device, according to aspects of the present disclosure.

**[0014]** FIG. **4** is a diagrammatic side view of a proximal connection portion and locking features of an intravascular device, according to aspects of the present disclosure.

**[0015]** FIG. **5** is a diagrammatic cross-sectional view of a proximal connection portion and locking features of an intravascular device.

**[0016]** FIG. **6** is a diagrammatic top view of an intravascular device, according to aspects of the present disclosure.

**[0017]** FIG. **7**A is a diagrammatic perspective view of a proximal flexible elongate member, according to aspects of the present disclosure.

**[0018]** FIG. **7**B is an enlarged diagrammatic perspective view of a portion of the proximal flexible elongate member indicated in FIG. **7**A, according to aspects of the present disclosure.

**[0019]** FIG. **8**A is a picture of a locking section of an intravascular device, according to aspects of the present disclosure.

**[0020]** FIG. **8**B is a picture of a locking section of an intravascular device, according to aspects of the present disclosure.

**[0021]** FIG. **8**C is a picture of a locking section of an intravascular device, according to aspects of the present disclosure.

**[0022]** FIG. **8**D is a picture of a locking section and a proximal section of an intravascular device, according to aspects of the present disclosure.

**[0023]** FIG. **9** is a diagrammatic top view of a connector of the intravascular system, while the connector is in an open position, according to aspects of the present disclosure.

**[0024]** FIG. **10** is a diagrammatic top cross-sectional view of a connector, according to aspects of the present disclosure.

**[0025]** FIG. **11** is diagrammatic side cross-sectional view of a connector, according to aspects of the present disclosure.

**[0026]** FIG. **12** is a diagrammatic enlarged view of a portion of the connector in FIG. **11**, according to aspects of the present disclosure.

**[0027]** FIG. **13** is a diagrammatic top view of a locking clip, according to aspects of the present disclosure.

**[0028]** FIG. **14** is a diagrammatic proximal view of a locking clip, according to aspects of the present disclosure.

**[0029]** FIG. **15** is a flowchart of a method of fabricating an intravascular device, according to aspects of the present disclosure.

## DETAILED DESCRIPTION

**[0030]** For the purposes of promoting an understanding of the principles of the present disclosure, reference will now be made to the embodiments illustrated in the drawings, and specific language will be used to describe the same. It is nevertheless understood that no limitation to the scope of the disclosure is intended. Any alterations and further modifications to the described devices, systems, and methods, and any further application of the principles of the present disclosure are fully contemplated and included within the present disclosure as would normally occur to one skilled in the art to which the disclosure relates. In particular, it is fully contemplated that the features, components, and/or steps described with respect to one embodiment may be combined with the features, components, and/or steps described with respect to other embodiments of the present disclosure. For the sake of brevity, however, the numerous iterations of these combinations will not be described separately.

**[0031]** As used herein, "flexible elongate member" or "elongate flexible member" includes at least any thin, long, flexible structure that can be inserted into the vasculature of a patient. While the illustrated embodiments of the "flexible elongate members" of the present disclosure have a cylindrical profile with a circular cross-sectional profile that defines an outer diameter of the flexible elongate member, in other instances all or a portion of the flexible elongate members may have other geometric cross-sectional profiles (e.g., oval, rectangular, square, elliptical, etc.) or non-geometric cross-sectional profiles. Flexible elongate members include, for example, intravascular catheters and intravascular guidewires. In that regard, intravascular catheters may or may not include a lumen extending along its length for receiving and/or guiding other instruments. If the intravascular catheter includes a lumen, the lumen may be centered or offset with respect to the cross-sectional profile of the device.

**[0032]** In most embodiments, the flexible elongate members of the present disclosure include one or more electronic, optical, or electro-optical components. For example, without limitation, a flexible elongate member may include one or more of the following types of components: a pressure

sensor, a flow sensor, a temperature sensor, an imaging element, an optical fiber, an ultrasound transducer, a reflector, a mirror, a prism, an ablation element, a radio frequency (RF) electrode, a conductor, and/or combinations thereof. Generally, these components are configured to obtain data related to a vessel or other portion of the anatomy in which the flexible elongate member is disposed. Often the components are also configured to communicate the data to an external device for processing and/or display. In some aspects, embodiments of the present disclosure include imaging devices for imaging within the lumen of a vessel, including both medical and non-medical applications. However, some embodiments of the present disclosure are particularly suited for use in the context of human vasculature. Imaging of the intravascular space, particularly the interior walls of human vasculature can be accomplished by a number of different techniques, including ultrasound (often referred to as intravascular ultrasound ("IVUS") and intracardiac echocardiography ("ICE")) and optical coherence tomography ("OCT"). In other instances, infrared, thermal, or other imaging modalities are utilized. Further, in some instances the flexible elongate member includes multiple electronic, optical, and/or electro-optical components (e.g., pressure sensors, temperature sensors, imaging elements, optical fibers, ultrasound transducers, reflectors, mirrors, prisms, ablation elements, RF electrodes, conductors, etc.).

**[0033]** The electronic, optical, and/or electro-optical components of the present disclosure are often disposed within a distal portion of the flexible elongate member. As used herein, "distal portion" of the flexible elongate member includes any portion of the flexible elongate member from the mid-point to the distal tip. As flexible elongate members can be solid, some embodiments of the present disclosure will include a housing portion at the distal portion for receiving the electronic components. Such housing portions can be tubular structures attached to the distal portion of the elongate member. Some flexible elongate members are tubular and have one or more lumens in which the electronic components can be positioned within the distal portion.

**[0034]** The electronic, optical, and/or electro-optical components and the associated communication lines are sized and shaped to allow for the diameter of the flexible elongate member to be very small. For example, the outside diameter of the elongate member, such as a guidewire or catheter, containing one or more electronic, optical, and/or electro-optical components as described herein are between about 0.0007" (0.0178 mm) and about 0.118" (3.0 mm), with some particular embodiments having outer diameters of approximately 0.014" (0.3556 mm) and approximately 0.018" (0.4572 mm)). As such, the flexible elongate members incorporating the electronic, optical, and/or electro-optical component(s) of the present application are suitable for use in a wide variety of lumens within a human patient besides those that are part or immediately surround the heart, including veins and arteries of the extremities, renal arteries, blood vessels in and around the brain, and other lumens.

**[0035]** "Connected" and variations thereof as used herein includes direct connections, such as being glued or otherwise fastened directly to, on, within, etc. another element, as well as indirect connections where one or more elements are disposed between the connected elements.

**[0036]** "Secured" and variations thereof as used herein includes methods by which an element is directly secured to another element, such as being glued or otherwise fastened directly to, on, within, etc. another element, as well as indirect techniques of securing two elements together where one or more elements are disposed between the secured elements.

**[0037]** Referring initially to FIG. **1**, shown therein is an intravascular system **100** according to an embodiment of the present disclosure. In that regard, the intravascular system includes an intravascular device **102** and a connector **104**. As will be discussed in greater detail below, a communication cable **105** extends from the connector **104** in a direction coaxial with or parallel to the longitudinal axis of the intravascular device **102**. As a result of the communication cable **105** extending coaxial with or parallel to the intravascular device, the connector **104** and communication cable **105** are less likely to catch on a patient, patient's clothing, medical equipment (including tubes, catheters, wires, leads, etc.) and/or other structures in the procedure room when maneuvering the intravascular device **102**.

**[0038]** Referring now to FIG. **2**, a side view of the intravascular device **102** is provided according to an embodiment of the present disclosure. As shown, the intravascular device **102** includes a flexible elongate member **106** having a distal portion **107** adjacent a distal end **108** and a proximal portion **109** adjacent a proximal end **110**. A component **112** is positioned within the distal portion **107** of the flexible elongate member **106** proximal of the distal tip **108**. Generally, the component **112** is representative of one or more electronic, optical, or electro-optical components. In that regard, the component **112** can include a pressure sensor, a flow sensor, a temperature sensor, an imaging element, an optical fiber, an ultrasound transducer, a reflector, a mirror, a prism, an ablation element, an RF electrode, a conductor, and/or combinations thereof. The specific type of component or combination of components can be selected based on an intended use of the intravascular device. In some instances, the component **112** is positioned less than 10 cm, less than 5, or less than 3 cm from the distal tip **108**. In some instances, the component **112** is positioned within a housing of the intravascular device **102**. In that regard, the housing can be a separate component secured to the flexible elongate member **106** in some instances. In other instances, the housing can be integrally formed as a part of the flexible elongate member **106**.

**[0039]** The intravascular device **102** also includes a connection portion **114** adjacent the proximal portion **109** of the device. In that regard, the connection portion **114** can be spaced from the proximal end **110** of the flexible elongate member **106** by a distance **116**. Generally, the distance **116** is between 0% and 50% of the total length of the flexible elongate member **106**. While the total length of the flexible elongate member can be any length, in some embodiments the total length is between about 1300 mm and about 4000 mm, with some specific embodiments having a length of 1400 mm, 1900 mm, and 3000 mm. In some instances the connection portion **114** is spaced from the proximal end **110** between about 0 mm and about 1400 mm. In some specific embodiments, the connection portion **114** is spaced from the proximal end by a distance of 0 mm, 300 mm, and 1400 mm. Accordingly, in some instances the connection portion **114** is positioned at the proximal end **110**. In some such embodiments, one or more aspects of the engagement and alignment features of the intravascular device **102** discussed below are positioned distal of the of the connection portion **114** instead of proximal of the connection portion **114** as shown in the

embodiment of FIG. **2**, or the engagement and alignment features may be omitted entirely.

**[0040]** In the illustrated embodiment of FIG. **2** the intravascular device **102** includes a locking section **118** extending proximally from the connection portion **114** to another section **120** that extends to proximal end **110**. In the illustrated embodiment, the section **120** is rounded to proximal end **110**. In other embodiments, the section **120** has a tapered, arcuate, and/or other changing profile as it extends proximally to proximal end **110**. In that regard, in some instances the outer profile and/or diameter of the section **120** reduces as it extends proximally to proximal end **110** such that the reduced profile and/or diameter of the proximal end facilitates easier introduction of one or more other instruments over the intravascular device. In other embodiments, the section **120** has a constant profile as it extends proximally to proximal end **110**. As section **120** is proximal to the locking section **118**, it is sometimes referred to as the proximal section.

**[0041]** As shown, the connection portion **114** has a diameter **122** (or other similar measurement for outer cross-section profiles for non-circular cross-sectional embodiments) while locking section **118** has a diameter **124** (again, or other similar measurement for outer cross-section profiles for non-circular cross-sectional embodiments). The diameter **124** of locking section **118** is different than the diameter **122** of connection portion **114**. In that regard, the different sizes of the diameters **122**, **124** create a structure that is configured to facilitate alignment and/or connection of the intravascular device **102** to a connector, such as connector **104**. In the illustrated embodiment, the diameter **124** of locking section **118** is less than the diameter **122** of the connection portion **114**. In some embodiments, the diameter **124** of locking section **118** is between about 40% and about 80% of diameter **122**, with some particular embodiments being about 42%, 64%, and/or other percentage of diameter **122**. In that regard, in some embodiments the diameter **122** of connection portion **114** is between about 0.0178 mm and about 3.0 mm, with some particular embodiments being 0.3556 mm (0.014"), 0.4572 mm (0.018") and 0.889 mm (0.035"). Accordingly, in some embodiments the diameter **124** of locking section **118** is between about 0.007 mm and about 2.4 mm, with some particular embodiments being 0.186 mm (0.0073"), 0.23 mm, and 0.50 mm. In the illustrated embodiment, section **120** has a diameter that is approximately equal to diameter **122** and, therefore, greater than diameter **124**. However, in other embodiments, section **120** has a diameter that is greater than diameter **122**, less than diameter **122**, greater than diameter **124**, equal to diameter **124**, and/or less than diameter **124**. In some embodiments, locking section **118** is a section of a core wire extending through the connection portion **114**. Locking section **118** and section **120** together can sometimes to be referred to as the locking feature.

**[0042]** As shown in FIG. **2**, the locking section **118** extends proximally from connection portion **114** a distance **126**, while section **120** extends proximally from locking section **118** to proximal end **110** a distance **128**. Together, distances **126** and **128** equal the distance **116** that the connection portion **114** is spaced from the proximal end **110** of the intravascular device **102**. In some instances, the distance **126** is between about 0.508 mm (0.020") and about 2.54 mm (0.10"), with some particular embodiments being 0.762 mm (0.030"), 1.016 mm (0.040"), and 1.524 mm (0.060"). Further, while the transition between connection portion **114** and locking section **118** and the transition between locking section **118** and section **120** are shown as being stepped in the illustrated embodiments, in other embodiments the transitions are tapered and/or otherwise make a gradual change in outer diameter along the length of the intravascular device. In some embodiments, use of tapered and/or gradual transitions results in the proximal portion of the intravascular device **102** not having any sharp edges. In some implementations, the use of tapered and/or gradual transitions for one or both of the transitions between locking section **118** and either the connection portion **114** or section **120** makes cleaning the proximal portion of the device (e.g., to remove any liquids or other unwanted materials on the surface of the proximal portion of the intravascular device) easier. In some embodiments, the intravascular system **100** can include one or more features described in U.S. patent application Ser. No. 15/374,312, titled "SIDE-LOADING CONNECTORS FOR USE WITH INTRAVASCULAR DEVICES AND ASSOCIATED SYSTEMS AND METHODS," filed Dec. 9, 2016, which is hereby incorporated by reference in its entirety.

**[0043]** The connection portion **114** is configured to facilitate communication between the intravascular device **102** and another device. More specifically, in some embodiments the connection portion **114** is configured to facilitate communication of data obtained by the component **112** to another device, such as a computing device or processor. Accordingly, in some embodiments, the connection portion **114** includes one or more conductive portions. In some implementations, the connection portion **114** can include conductive bands, rings, coatings, coils, etc. In some instances, the connection portion **114** includes one or more electrical connectors, or conductive portions, as described in U.S. patent application Ser. No. 13/931,052, titled "INTRAVASCULAR DEVICES, SYSTEMS, AND METHODS," filed Jun. 28, 2013, which is hereby incorporated by reference in its entirety. In other embodiments, the connection portion **114** includes an optical connector. In such instances, the connection portion **114** provides an optical connection to one or more optical communication pathways (e.g., fiber optic cable) that extend along the length of the flexible elongate member **106** and are optically coupled to the component **112**. Further, in some embodiments the connection portion **114** provides both electrical and optical connections to both electrical conductor(s) and optical communication pathway(s) coupled to the component **112**. In that regard, it should again be noted that component **112** can be comprised of a plurality of elements in some instances. In some instances, the connection portion **114** can be configured to provide a physical connection to another device, either directly or indirectly. In other instances, the connection portion **114** can be configured to facilitate wireless communication between the intravascular device **102** and another device. Generally, any current or future developed wireless protocol(s) may be utilized. In yet other instances, the connection portion **114** facilitates both physical and wireless connection to another device.

**[0044]** As noted above, in some instances the connection portion **114** provides a connection between the component **112** of the intravascular device **102** and an external device. Accordingly, in some embodiments one or more electrical conductors, one or more optical pathways, and/or combinations thereof extend along the length of the flexible elongate

member **106** between the connection portion **114** and the component **112** to facilitate communication between the connection portion **114** and the component **112**. Generally, any number of electrical conductors, optical pathways, and/or combinations thereof can extend along the length of the flexible elongate member **106** between the connection portion **114** and the component **112**. In some instances, between one and ten electrical conductors (or conductive portions) and/or optical pathways extend along the length of the flexible elongate member **106** between the connection portion **114** and the component **112**. For the sake of clarity and simplicity, the embodiments of the present disclosure described below include three electrical conductors and, therefore, the connection portion **114** is described as having three separate conductive portions corresponding to the three electrical conductors.

**[0045]** In some embodiments, the flexible elongate member **106** includes multiple core wires. For example, the flexible elongate member **106** can include a proximal core wire (or proximal core) and a distal core wire (or distal core) that are attached to one another. The components associated with the proximal portion of the intravascular device **102** (e.g., including the proximal core wire) can be referred to a proximal subassembly, and the components associated with the distal portion of the intravascular device **102** (e.g., including the distal core wire) can be referred to a distal subassembly. The flexible elongate member can refer to one or more components of the proximal subassembly and/or the distal subassembly. In some embodiments, the flexible elongate member **106** includes features as described in U.S. patent application Ser. No. 13/931,052, titled "INTRAVASCULAR DEVICE, SYSTEMS, AND METHODS" and filed Jun. 28, 2013, which is hereby incorporated by reference in its entirety.

**[0046]** For example, as shown in FIG. **3**, in some instances the connection portion **114** includes conductive portions **132**, **134**, and **136** that are separated from one another and the main body of the flexible elongate member **106** by insulating portions **138**, **140**, **142**, and **144**. In that regard, the conductive portions **132**, **134**, and **136** are formed of a conductive material and are portions of a hypotube, a coil, conductive ink, conductive coating formed over a tubular member, and/or combinations thereof in some instances. In some embodiments, the conductive portions **132**, **134** and **136** include features as described in U.S. patent application Ser. No. 14/143,304, titled "INTRAVASCULAR DEVICES, SYSTEMS, AND METHODS" and filed Dec. 30, 2013, which is hereby incorporated by reference in its entirety. It is understood that the total number of communication pathways and/or the number of electrical conductors and/or optical pathways is different in other embodiments and, therefore, the number of conductive portions (or optical connectors) included in connection portion is different as well. More specifically, the number of communication pathways and the number of electrical conductors and optical pathways extending along the length of the flexible elongate member **106** can be selected based on the desired functionality of the component **112** and the corresponding elements that define component **112** to provide such functionality. As a result, the number and type of connections provided by connection portion **114** are likewise determined by the desired functionality of the component **112**, the corresponding elements that define component **112** to provide such functionality, and the communication needs for such elements. Further still, in some instances, one or more of the insulating portions **138**, **140**, **142**, and **144** is omitted. For example, as shown in the exemplary embodiment of FIG. **4**, insulating portion **144** has been omitted.

**[0047]** Referring now to FIG. **5**, shown therein is a diagrammatic cross-sectional view of the connection portion **114**, locking section **118** and section **120** of the intravascular device **102**. In some embodiments, the connection portion **114** includes three conductive portions **132**, **134**, and **136** that are separated from one another and the main body of the flexible elongate member **106** by insulating portions **138**, **140**, and **142**. As the conductive portions **132**, **134** and **136** and the insulating portions **138**, **140** and **142** are in annular-ring shapes around a circumference of the flexible elongate member **106**, cross sections of them appear on either side of the connection portion **114**. Each of the conductive portions **132**, **134** and **136** is electrically coupled to a conductive ribbon. In the example shown in FIG. **5**, conductive portion **132** is electrically coupled to conductive wire **30**, conductive portion **134** is electrically coupled to conductive wire **40**, and conductive portion **136** is electrically coupled to conductive wire **50**. In some instances, the conductive wires **30**, **40** and **50** are embedded within a polymer layer **180**. Conductive wires **30**, **40** and **50** are electrically coupled to component **112** and extend proximally through the flexible elongate member **106**. The polymer layer **180** insulates the conductive wires **30**, **40** and **50** from one another and also insulates the conductive wires **30**, **40** and **50** from the metal core **150**. In some embodiments, the flexible elongate member **106** includes a metal core **150** that extends through the conductive portion **114**. In some implementations, locking section **118** and section **120** are parts of an integral component referred to as a locking core **160**. Locking core **160** is separate from the metal core **150** and is attached by soldering to the proximal end of the connection portion **114** at interface **10** with conductive portion **136** and at interface **20** with a proximal end of the metal core **150**. While the soldering attachment at interfaces **10** and **20** are generally mechanically sound, they present possible points of failure. When the soldering attachment at interfaces **10** and **20** fails, the flexible elongate member **106** would be movable longitudinally and conductive portions **132**, **134**, and **136** would be out of alignment with corresponding electrical contacts of the connector **104**.

**[0048]** Referring now to FIG. **6**, shown there is a diagrammatic top view of intravascular device **102**, according to aspects of the present disclosure. The intravascular device **102** can be an intravascular guidewire sized and shaped for positioning within a vessel of a patient. The intravascular device **102** can include the electronic component **112**. For example, the electronic component **112** can be a pressure sensor configured to measure a pressure of blood flow within the vessel of the patient. The intravascular device **102** includes the flexible elongate member **106**. The electronic component **112** is disposed at the distal portion **107** of the flexible elongate member **106**. The electronic component **112** can be mounted at the distal portion **107** within a housing **280** in some embodiments. A flexible tip coil **290** extends between the housing **280** and the distal end **108**. The connection portion **114** is disposed at the proximal portion **109** of the flexible elongate member **106**. The connection portion includes the conductive portions **132**, **134**, **136**. In some embodiments, the conductive portions **132**, **134**, **136** can be conductive ink that is printed and/or deposited around

the flexible elongate member. In some embodiments, the conductive portions **132**, **134**, **136** are conductive, metallic rings that are positioned around the flexible elongate member. The locking section **118** and section **120** are disposed at the proximal portion **109** of the flexible elongate member **106**.

**[0049]** The intravascular device **102** in FIG. **6** includes a distal core **210** and a proximal core **220**. The distal core **210** and the proximal core **220** are metallic components forming part of the body of the intravascular device **102**. For example, the distal core **210** and the proximal core **220** are flexible metallic rods that provide structure for the flexible elongate member **106**. The diameter of the distal core **210** and the proximal core **220** can vary along its length.

**[0050]** In some embodiments, the intravascular device **102** comprises a distal assembly and a proximal assembly that are electrically and mechanically joined together, which results in electrical communication between the electronic component **112** and the conductive portions **132**, **134**, **136**. For example, pressure data obtained by the electronic component **112** (in this example, electronic component **112** is a pressure sensor) can be transmitted to the conductive portions **132**, **134**, **136**. Control signals from a computer in communication with the intravascular device **102** can be transmitted to the electronic component **112** via the conductive portions **132**, **134**, **136**. The distal subassembly can include the distal core **210**. The distal subassembly can also include the electronic component **112**, the conductive members **230**, and/or one or more layers of polymer/plastic **240** surrounding the conductive members **230** and the core **210**. For example, the polymer/plastic layer(s) can protect the conductive members **230**. The proximal subassembly can include the proximal core **220**. The proximal subassembly can also include one or more layers of polymer layer(s) **250** (hereinafter polymer layer **250**) surrounding the proximal core **220** and/or conductive ribbons **260** embedded within the one or more layers of polymer layer(s) **250**. In some embodiments, the proximal subassembly and the distal subassembly can be separately manufactured. During the assembly process for the intravascular device **102**, the proximal subassembly and the distal subassembly can be electrically and mechanically joined together. As used herein, flexible elongate member can refer to one or more components along the entire length of the intravascular device **102**, one or more components of the proximal subassembly (e.g., including the proximal core **220**, etc.), and/or one or more components the distal subassembly **210** (e.g., including the distal core **210**, etc.).

**[0051]** In various embodiments, the intravascular device **102** can include one, two, three, or more core wires extending along its length. For example, a single core wire can extend substantially along the entire length of the flexible elongate member **106**. In such embodiments, a locking section **1180** and a section **1200** can be integrally formed at the proximal portion of the single core wire. The electronic component **112** can be secured at the distal portion of the single core wire. In other embodiments, such as the embodiment illustrated in FIG. **6**, the locking section **1180** and the section **1200** can be integrally formed at the proximal portion of the proximal core **220**. The electronic component **112** can be secured at the distal portion of the distal core **210**. The intravascular device **102** includes one or more conductive members **230** in communication with the electronic component **112**. For example, the conductive members **230** can be one or more electrical wires that are directly in communication with the electronic component **112**. In some instances, the conductive members **230** are electrically and mechanically coupled to the electronic component **112** by, e.g., soldering. In some instances, the conductive members **230** comprise two or three electrical wires (e.g., a bifilar cable or a trifilar cable). An individual electrical wire can include a bare metallic conductor surrounded by one or more insulating layers. The conductive members **230** can extend along the length of the distal core **210**. For example, at least a portion of the conductive members **230** can be spirally wrapped around the distal core **210**.

**[0052]** The intravascular device **102** includes one or more conductive ribbons **260** at the proximal portion of the flexible elongate member **106**. The conductive ribbons **260** are embedded within polymer layer(s) **250**. The conductive ribbons **260** are directly in communication with the conductive portions **132**, **134**, and/or **136**. In some instances, the conductive members **230** are electrically and mechanically coupled to the electronic component **112** by, e.g., soldering. In some instances, the conductive portions **132**, **134**, and/or **136** comprise conductive ink (e.g., metallic nano-ink, such as silver or gold nano-ink) that is deposited or printed directed over the conductive ribbons **260**.

**[0053]** As described herein, electrical communication between the conductive members **230** and the conductive ribbons **260** can be established at the connection region **270** of the flexible elongate member **106**. By establishing electrical communication between the conductive members **230** and the conductive ribbons **260**, the conductive portions **132**, **134**, **136** can be in electrically communication with the electronic component **112**.

**[0054]** In some embodiments represented by FIG. **6**, intravascular device **102** includes a locking section **1180** and a section **1200**. Different from the locking core **160** (including locking section **118** and section **120**) in FIG. **5**, which is soldered to metal core **150**, locking section **1180** and section **1200** in FIG. **6** are integral with proximal core **220**. To form locking section **1180**, a machining process is necessary to remove polymer layer **250** and conductive ribbons **260** in locking section **1180** and to shape proximal core **220** in locking section **1180** to the desired shape. As shown in FIG. **6**, locking section **1180** includes a reduced diameter while section **1200** has a diameter substantially similar to that of proximal core **220** in the connection portion **114**. In some instances, because the machining process removes conductive ribbons in locking section **1180**, proximal ends of the conductive ribbons **260** would be exposed to moisture and/or liquids, such as blood, saline solutions, disinfectants, and/or enzyme cleaner solutions, an insulation layer **158** is formed over the proximal end portion of the connection portion **114** to insulate the exposed conductive ribbons.

**[0055]** FIGS. **7**A and **7**B illustrate perspective views of a proximal subassembly of the intravascular device **102**. The proximal subassembly includes including the proximal core **220**. The proximal core **220** can be made of a metal or metal alloy in some embodiments, such as nickel-cobalt base alloy (e.g., MP35N). The diameter of the proximal core **220** can be between 0.0100 and 0.0110, including values such as 0.0105", 0.0107", 0.0109" in some embodiments. The one or more polymer layers **250** surround the proximal core **220**. The layer **250** can include polyimide in some embodiments. One or more metallic, conductive ribbons **260** are embedded within the polymer layer(s) **250**. For example, the proximal

subassembly can include two conductive ribbons **260**. The polymer layer(s) **250** can electrically isolate the conductive ribbons **260** from the proximal core **220**. Any suitable process (e.g. grinding, ablating, etc.) for removing a portion of the polymer layer(s) **250** can be used to expose portions of the conductive ribbons **260**. Electrical communication with the conductive ribbons **260** can be established at the exposed portions of the conductive ribbons **260**. In some embodiments, the proximal subassembly can include features as described in U.S. patent application Ser. No. 14/143,304, titled "INTRAVASCULAR DEVICES, SYSTEMS, AND METHODS" and filed Dec. 30, 2013, which is hereby incorporated by reference in its entirety.

**[0056]** FIG. **8**A is a picture of locking section **1180** of the intravascular device **102**, according to aspects of the present disclosure. In some embodiments, while the entire locking section **1180** is integral with proximal core **220** extending distally into the connection portion **114**, it can be machined to have different subsections. For example, as shown in FIG. **8**A, locking section **1180** includes a middle subsection **170**, a distal subsection **168** and a proximal subsection **178**. In some instances, the middle subsection **170** has a uniform diameter D**1** throughout its entire length. In embodiment represented by FIG. **8**A, the distal subsection **168** distal to the middle section **170** may include a first taper that has a diameter D**2** on its distal end and a diameter D**1** at its proximal end. In some instances, the proximal subsection **178** includes a second taper that has a diameter D**1** at its distal end and a diameter D**2** at its proximal end. In some other implementations, the distal subsection **168** may not include the first taper but nevertheless transitions from D**2** to D**1** in a different fashion. Similar, in some embodiments, the proximal subsection **178** may not include the second taper but nevertheless transitions from D**1** to D**2** in a different fashion. For example, the transition between the first and second diameter may include one or more discontinuities or step changes. For a further example, the transition between the first and second diameters at the distal and proximal subsections **168** and **178** may not be linear, but parabolic. In still other embodiments, one of the distal subsection **168** and the proximal subsection **178** may be omitted entirely. In some instances, section **1200** and insulating portion **144** include polymer layer **250** and have a diameter D**3**. D**3** is larger than D**2**, which is larger than D**1**. In some embodiments, diameter D**1** is between 0.0050 inch and 0.020 inch, with some particular embodiments being 0.0073 inch, while D**2** is between 0.010 inch and 0.016 inch, with some particular embodiments being 0.0107 inch and 0.013 inch. In some implementations, the entire length L**1** of the locking section **1180** is between 0.060" and 0.200". In some instances, the middle section **170** has a length L**2**. Length L**2** is between 0.020" and 0.100".

**[0057]** In some other embodiments shown in FIGS. **8**B and **8**C, a thickness of polymer layer **250** around the circumference of distal subsection **168** is machined or ground away, leaving a thinner polymer layer **250** in distal subsection **168**. In some instances, as shown in FIG. **8**B, after a thickness of the polymer layer **250** is machined away, a length of conductive ribbon **260** (one is shown) is exposed but remains insulated from proximal core **220**. In some implementations illustrated in FIG. **8**C, the length of conductive ribbons **260** shown in FIG. **8**B is removed or shortened by machining, grinding, or cutting. The insulation layer **158** is then formed over the distal subsection **168** to protect residual conductive ribbons **260** in distal subsection **168**, such those shown in FIGS. **8**B and **8**C, from being exposed to moisture, such as blood, saline solutions, enzyme cleaners, and/or other liquids.

**[0058]** In some implementations, locking section **1180** is formed by removing polymer layer **250**, conductive ribbons **260** (not shown in FIG. **8**A) embedded within the polymer layer **250**, and a portion of the proximal core **220**. In those implementations, once the conductive ribbons in locking section **1180** are removed, a proximal end portion of the conductive ribbons **260** in the connection portion **114** would be exposed. If left un-insulated, proximal ends of the conductive ribbons maybe exposed to moisture, such as blood, saline solutions, enzyme cleaners, and/or other liquids, causing shorts. Therefore, as shown in FIG. **8**A, an insulation layer **158** is formed the proximal end portion of the connection portion **114** to insulate the exposed conductive ribbons **260** from moisture. As the insulation layer **158** can add further thickness of the polymer layer **250**, the section where is insulation layer **158** is formed has a diameter D**4**. D**4** is larger than D**3**. In some implementations, proximal core **220** is electrically coupled to an electrical ground and component **112** is electrically grounded by being electrically coupled to the distal core **210**, which is electrically coupled to proximal core **220**.

**[0059]** Reference is now made to FIG. **8**D. Shown therein is a picture of locking section **1180** and section **1200** of the intravascular device **102**. In some embodiments represented by FIG. **8**D, at least a portion of section **1200** is covered by polymer layer **250** while polymer layer **250** is removed from another portion of section **1200** toward proximal end **110**. In some other embodiments, polymer layer **250** is completely removed from section **1200** and section **1200** is free of polymer layer **250**.

**[0060]** Referring now to FIG. **9**, shown therein is a diagrammatic top view of the connector **104** of the intravascular system **100**. In some instances, the connector **104** of the present disclosure incorporates one or more features of the connectors described in P.C.T. Application No. PCT/M2016/054528, titled "SIDE-LOADING CONNECTORS WITH INLINE CABLING FOR USE WITH INTRAVASCULAR DEVICES AND ASSOCIATED SYSTEMS AND METHODS" and filed Jul. 28, 2016, U.S. patent application Ser. No. 13/930,787, titled "SIDE-LOADING CONNECTORS FOR USE WITH INTRAVASCULAR DEVICES AND ASSOCIATED SYSTEMS AND METHODS" and filed Jun. 28, 2013, and U.S. patent application Ser. No. 13/930,636, titled "SIDE-LOADING CONNECTORS FOR USE WITH INTRAVASCULAR DEVICES AND ASSOCIATED SYSTEMS AND METHODS" and filed Jun. 28, 2013, each of which is hereby incorporated by reference in its entirety. The example connector **104** shown in FIG. **9** includes a component **204** and a component **206**. The component **204** includes a recess **208** sized and shaped to receive the connection portion **114** of the flexible elongate member **106**. The component **206** is movable with respect to the component **204**. In particular, the component **206** is slidable with respect to the component **204** to facilitate insertion of an intravascular device into the connector **104** and subsequent engagement of the connector with the received intravascular device that results in one or more electrical connections between the intravascular device and the connector. The sliding movement of the component **206** relative to the component **204** can be parallel to a longitu-

dinal axis of the component **204** and/or the longitudinal axis of an intravascular device received within the connector **104**. Component **204** includes a locking clip **200**. The locking clip **200** includes a slit **201** sized and shaped to receive locking section **1180** while section **1200** is proximal to the locking clip **200**.

**[0061]** FIG. **10** shows a diagrammatic cross-sectional view of the connector **104**. In some embodiments, component **206** includes split, open-comb electrical contacts **232**A, **232**B, **234**A, **234**B, and **236**. When connection portion **114** is received within recess **208** and locking section **1180** is received within slit **201**, conductive portion **132** is aligned with electrical contacts **232**A and **232**B along a direction of the relative movement between component **204** and component **206**. Similarly, along the same direction of movement, conductive portion **134** is aligned with electrical contacts **234**A and **234**B and conductive portion **136** is aligned with electrical contacts **236**. In some embodiments, conductive portions **132**, **134** and **136** are separated by insulating portions **138**, **140**, and **142**. In some instances, connection portion **114** also includes an insulating portion **144** distal to locking section **1180**. As locking section **1180** is of a reduced diameter as compared to section **1200** and insulating portion **144** (or conductive portion **136** if insulating portion **144** is not present), the connection portion **114** is prevented from moving along its lengthwise direction, either distally or proximally.

**[0062]** Further, the open-comb electrical contacts are particularly well-suited to facilitate proper electrical connection between the connector **202** and an intravascular device **102** positioned within the recess **208** of component **204** when the component **206** is translated relative to the component **204** from the open position towards the closed position. Further still, the open-comb configuration allows for the intravascular device to be rotated with respect to the connector while maintaining a proper electrical connection. Thus, the open-comb configuration allows a user (e.g., surgeon) to keep the connector **202** connected to the intravascular device while the intravascular device is moved or advanced through the vasculature with little resistance to rotational movement of the intravascular device. In other words, the intravascular device can be moved through the vasculature, undergoing various twists and turns, without the connector **202** needing to move with the rotations of the intravascular device. Also, the open-comb configuration helps ensure good electrical contact due to the multiple fingers for each of the contacts. In addition, the open end of the open-comb configuration provides a good guide for ensuring that the intravascular device is correctly positioned when the component **206** is closed. While various advantages of the open-comb configuration have been described, it is understood that any appropriately sized electrical contacts can be utilized, including a single contact or a plurality of contacts.

**[0063]** Referring now to FIG. **11**, shown therein is diagrammatic cross-sectional side view of connector **104**. FIG. **11** shows how conductive portions engage the split, open-comb electrical contacts **232**A, **232**B, **234**A, **234**B, and **236** and how locking section **1180** is received within slit **201** of locking clip **200**. In some instances, each of the electrical contacts has two arms that bend upward and two arms that bend downwards. Each of the electrical contacts can also have more or less arms bending different directions. For example, each of the electrical contacts can have one or three arms bending upwards and one or three arms bending downwards. In some embodiments, the slit **201** extends halfway through the height of the locking clip **200**. To further illustrate the details of locking clip **200**, the proximal portion of connector **104** is enlarged and shown in FIG. **12**. In some embodiments, locking clip **200** includes a top portion **205** that tilts proximally at a tilt angle. The tilt angle is defined between the plane where the top portion **205** resides and the plane where the rest of locking clip **200** resides. In some instances, the tilt angle is between 10 and 90 degrees. Once locking section **1180** is received in slit **201** of locking clip **200**, the proximally tilting top portion **205** prevents locking section **1180** from slipping upwards out of the slit **201**. Advantageously, the engagement of locking section **1180** and slit **201** of locking clip **200** ensure reliable electrical connection between conductive portions **132**, **134**, and **136** of connection portion **114** and split, open-comb electrical contacts **232**A, **232**B, **234**A, **234**B, and **236** in connector **104**. In addition, as locking section **1180** is integral with proximal core **220** that extends through connection portion, locking section **1180** is less prone to failure. Such failure includes locking section **1180** detaching from connection portion **114**. In the undesirable case of such detachment, connection portion **114**, along with conductive portions **132**, **134** and **136**, would be allowed to move along a longitudinal direction of flexible elongate member **106**, resulting in unreliable electrical connection between conductive portions **132**, **134** and **136** and open-comb electrical contacts **232**A, **232**B, **234**A, **234**B, and **236** in connector **104**.

**[0064]** FIG. **13** is a diagrammatic top view of locking clip **200** from direction T shown in FIG. **12**. In some embodiments, locking section **1180** includes distal subsection **168**, middle subsection **170**, and proximal subsection **178**. When locking section **1180** is received within slit **201** of locking clip **200**, the movement of locking section **1180** relative to locking clip **200** is limited to the length of the middle subsection **170**. The proximally tilting top portion **205** can engage the proximal portion **178** and section **1200** to prevent locking section **1180** from slipping out of the slit **201**. FIG. **14** is a diagrammatic proximal view of locking clip **200** from direction P shown in FIG. **12**. In some instances, locking section **1180** is received within slit **201** of locking clip **200**. The top portion **205** tilts proximally at the tilt angle. In some embodiments, slit **201** extends half way through the height of locking clip **200**.

**[0065]** Referring now to FIG. **15**, shown therein is a flowchart of method **300** for fabricating intravascular device **102**. Method **300** includes a step **310** of: providing a flexible elongate member, wherein the flexible elongate member includes a metal core, a polymer layer over the metal core, and a plurality of conductive ribbons embedded within the polymer layer; a step **320** of: securing an electronic component to the distal portion of flexible elongate member; a step of: machining around a circumference of the flexible elongate member to remove a portion of the polymer layer, a portion of the plurality of conductive ribbons, and a portion of the metal core in a locking section; and a step **340** of: forming an insulation layer over a proximal end of the plurality of conductive ribbons.

**[0066]** At step **310**, a flexible elongate member such as flexible elongate member **106** shown in FIG. **2** is provided. In some embodiments, flexible elongate member **106** includes a metal core such as distal core **210** and proximal core **220** in FIG. **6**. In other embodiments, the flexible

elongate member **106** includes a single metal core along its entire length. Flexible elongate member **106** has distal portion **107** and proximal portion **109**. In some instances, the metal core is formed of stainless steel, or super-elastic materials such as Nitinol or NiTiCo. Flexible elongate member **106** also includes a polymer layer, such as polymer layer **250** shown in FIG. **6**, over the proximal core **220**. In some implementations, polymer layer **250** is formed of polyethylene terephthalate (PET) or other suitable insulative, flexible polymer materials. Flexible elongate member **106** further includes a plurality of conductive ribbons embedded in the polymer layers. For example, conductive ribbons **260** in FIGS. **6**, **7**A and **7**B are embedded in polymer layer **250**. Polymer layer **250** surrounding conductive ribbons **260** electrically insulate conductive ribbons **260** from one another and from proximal core **220**. In some embodiments, flexible elongate member **106** is continuously formed and is available for purchases in rolls of hundreds or even thousands of feet. At step **310**, flexible elongate member **106** is cut to a length of 1300 mm, 1400 mm, 1900 mm, 3000 mm, 4000 mm, or other suitable length.

**[0067]** At step **320**, an electronic component, such as component **112** shown in FIG. **2**, is secured to a distal portion of the flexible elongate member, such as distal portion **107** of flexible elongate member **106**. In some embodiments, flexible elongate member **106** has a single metal core. In those embodiments, component **112** is mounted in a housing secured to distal portion **107** of flexible elongate member **106**. In some other embodiments, as shown in FIG. **6**, flexible elongate member **106** includes distal core **210** and proximal core **220**. Distal core **210** is a part of a distal subassembly, and the distal subassembly includes component **112**. Generally, the component **112** is representative of one or more electronic, optical, or electro-optical components. In that regard, component **112** can include a pressure sensor, a temperature sensor, an imaging element, an optical fiber, an ultrasound transducer, a reflector, a mirror, a prism, an ablation element, an radio frequency (RF) electrode, a conductor, and/or combinations thereof. In some embodiments, component **112** is electrically coupled to the plurality of conductive ribbons, such as conductive ribbons **260** shown in FIGS. **7**A and **7**B.

**[0068]** At step **330**, in order to form a locking feature, a portion of the polymer layer, a portion of the plurality of conductive ribbons embedded within the polymer layer, and a portion of the metal core is removed from a locking section by machining around a circumference of the flexible elongate member. For example, a portion of polymer layer **250**, including any conductive ribbons **260** embedded therein, is removed from the locking section **1180** shown in FIG. **8**A by machining around the circumference of the locking section **1180**. In some embodiments, a portion of proximal core **220** is also machined away from the locking section **1180** to form the proximal subsection **178**, the middle subsection **170**, and the distal subsection **168**. In some other embodiments, one of the proximal subsection **178** and the distal subsection **168** is omitted entirely. In the embodiments represented by FIG. **8**A, the proximal subsection **178** includes the second taper that has diameter D**2** at its proximal end and diameter D**1** at its distal end. In those embodiments, the distal subsection **168** includes the first taper that has diameter D**1** at its proximal end and diameter D**2** at its distal end. As described above, sometimes, the distal subsection **168** or the proximal subsection **178** may not include a taper but nevertheless transitions from the first diameter to the second diameter or vice versa. As proximal core **220** remains continuous throughout section **1200**, locking section **1180** and connection portion **114**, no separate locking core has to be soldered to proximal core **220**. In some embodiments, after polymer layer **250** and conductive ribbons **260** embedded within polymer layer **250** is removed from section **1180**, proximal core **220** in section **1180** can be shaped by a one or more machining and/or shaping processes. Such machining and/or shaping processes include rolling, grinding, laser ablation, electrical discharge machining (EDM), and lathing. In some instances, these shaping processes involve locally heating section **1180**. In some implementation, the shaping process is carried out by a computer-aid manufacturing (CAM) tool.

**[0069]** At step **340**, an insulation layer is formed over a proximal end portion of the plurality of the conductive ribbons. For example, as shown in FIG. **8**A, after polymer layer **250** and conductive ribbons **260** are removed from locking section **1180**, proximal ends of the conductive ribbons **260** immediately distal to locking section **1180** are exposed. Insulation layer **158** is then formed over the proximal end portion of the conductive ribbons to insulate them from moisture, blood, bodily fluids, saline solutions, enzymatic cleaner solutions, and other disinfectants.

**[0070]** Method **300** can include additional steps, such as those relating to formation of conductive portions. In some embodiments, method **300** further includes a step to remove a portion of polymer layer over a section of the connection portion to expose one of the plurality of conductive ribbons. Thereafter, method **300** includes an additional step of forming a conductive layer over the exposed conductive ribbon. In some instances, the conductive layer is a coating of conductive ink. In other instances, the conductive layer is a metal ring.

**[0071]** Persons skilled in the art will also recognize that the apparatus, systems, and methods described above can be modified in various ways. Accordingly, persons of ordinary skill in the art will appreciate that the embodiments encompassed by the present disclosure are not limited to the particular exemplary embodiments described above. In that regard, although illustrative embodiments have been shown and described, a wide range of modification, change, and substitution is contemplated in the foregoing disclosure. It is understood that such variations may be made to the foregoing without departing from the scope of the present disclosure. Accordingly, it is appropriate that the appended claims be construed broadly and in a manner consistent with the present disclosure.

What is claimed is:

**1**. An intravascular system, comprising:

an intravascular guidewire, comprising:

a flexible elongate member comprising a proximal portion and a distal portion, wherein the flexible elongate member further comprises a metal core, the metal core having a first diameter,

at least one electronic component secured to the distal portion of the flexible elongate member, and

at the proximal portion of the flexible elongate member, a locking section integral with the metal core,

wherein the locking section comprises a first subsection and a second subsection, the first subsection having a second diameter smaller than the first diameter, the second subsection transitioning between the first diameter and the second diameter.

2. The intravascular system of claim 1, wherein the proximal portion terminates at a proximal end, the proximal end comprising the first diameter.

3. The intravascular system of claim 1, wherein the flexible elongate member further comprises a polymer layer over the metal core and a plurality of conductive ribbons embedded within the polymer layer.

4. The intravascular system of claim 3, wherein the proximal portion of the flexible elongate member comprises an insulation layer formed over a proximal portion of the plurality of conductive ribbons, the insulation layer being distal to the locking section.

5. The intravascular system of claim 3, wherein the proximal portion of the flexible elongate member comprises a conductive portion in communication with one of the plurality of conductive ribbons.

6. The intravascular system of claim 5, wherein the conductive portion comprises a conductive ink.

7. The intravascular system of claim 5, wherein the conductive portion comprises a metal ring.

8. The intravascular system of claim 1, wherein the metal core comprises an electrical ground for the electronic component.

9. The intravascular system of claim 1,

wherein the locking section further comprises a third subsection,

wherein the first subsection is between the second subsection and the third subsection,

wherein the second subsection includes a first taper, a distal end of the first taper having the second diameter and a proximal end of the first taper having the first diameter, and

wherein the third subsection includes a second taper, a distal end of the second taper having the first diameter and a proximal end of the second taper having the second diameter.

10. The intravascular system of claim 1, further comprising:

a connector for coupling to the proximal portion of the flexible elongate member, the connector including a locking clip comprising a slit sized and shaped to receive the locking section of the flexible elongate member.

11. The intravascular system of claim 10, wherein the locking clip comprises a top portion tilting proximally at a tilt angle.

12. A method of fabricating an intravascular guidewire, comprising:

providing a flexible elongate member having a proximal portion and a distal portion, wherein the flexible elongate member comprises a metal core and a polymer layer over the metal core, the metal core having a first diameter;

securing at least one electronic component to the distal portion of the flexible elongate member; and

forming a locking section in the proximal portion of the flexible elongate member by machining around a circumference of the flexible elongate member to remove a portion of the polymer layer and a portion of the metal core in the locking section.

13. The method of claim 12, wherein the flexible elongate member further comprises a plurality of conductive ribbons embedded within the polymer layer.

14. The method of claim 13, wherein forming the locking section further comprises machining around a circumference of the flexible elongate member to remove a portion of the plurality of conductive ribbons in the locking section.

15. The method of claim 14, further comprising:

forming an insulation layer over a proximal portion of the plurality of conductive ribbons, the insulation layer being distal to the locking section.

16. The method of claim 13, further comprising:

removing a portion of the polymer layer over a conductive portion of the flexible elongate member such that one of the plurality of conductive ribbons is exposed, the conductive portion being adjacent to the locking section; and

forming a conductive layer over the exposed conductive ribbon.

17. The method of claim 16, wherein the conductive layer comprises a conductive ink.

18. The method of claim 16, wherein the conductive layer comprises a metal ring.

19. The method of claim 12, further comprising:

machining a first subsection of the locking section until the first subsection has a second diameter smaller than the first diameter; and

machining a second subsection such that the second subsection transitions between the first diameter and the second diameter.

* * * * *