July 3, 1962 D. M. STRATHEARN 3,042,763

TIMER

Filed Nov. 9, 1959 5 Sheets-Sheet 1

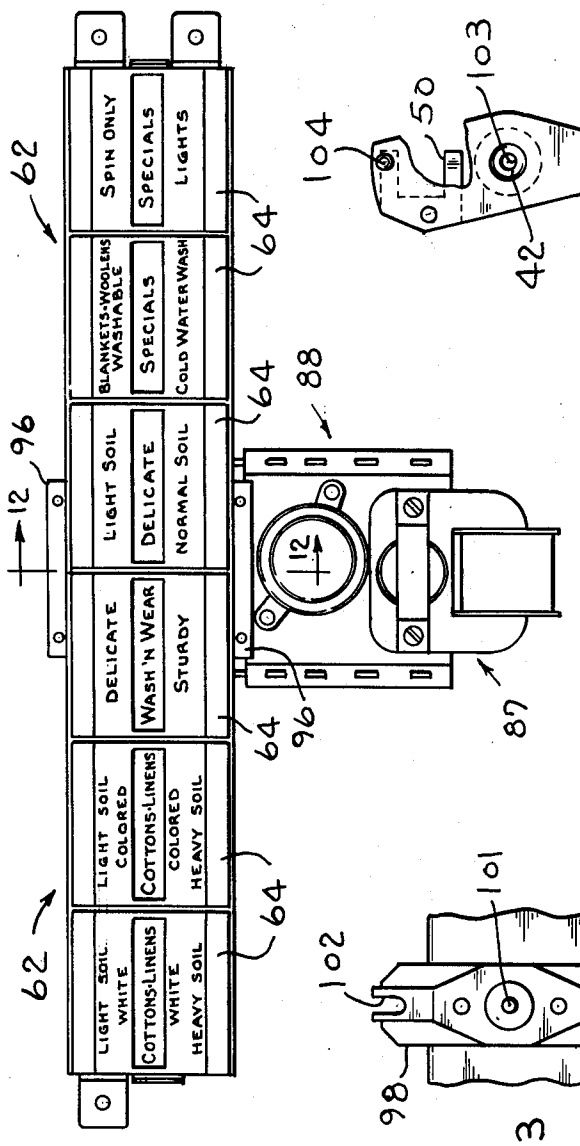

FIG. 1

FIG. 13

FIG. 14

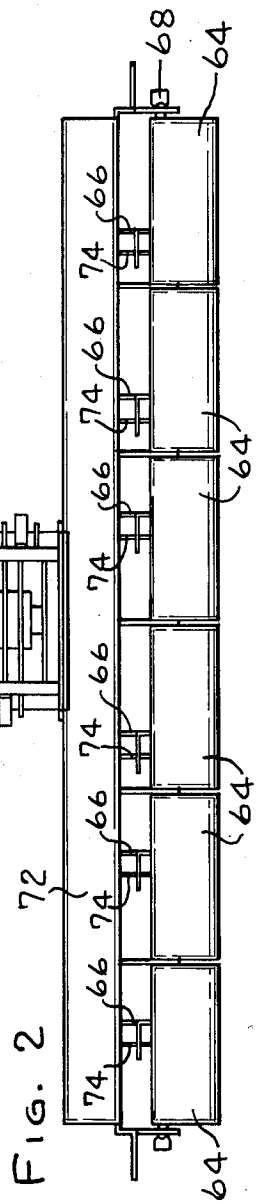

FIG. 2

INVENTOR.
DONALD M. STRATHEARN
BY
Bayard H. Michael
ATTORNEY

July 3, 1962 D. M. STRATHEARN 3,042,763

TIMER

Filed Nov. 9, 1959 5 Sheets-Sheet 2

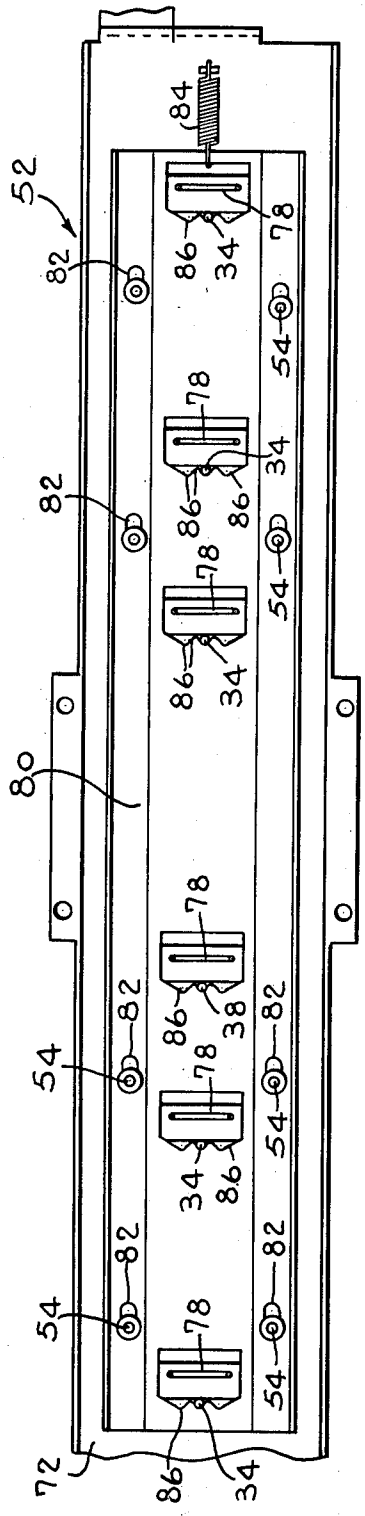

FIG. 4

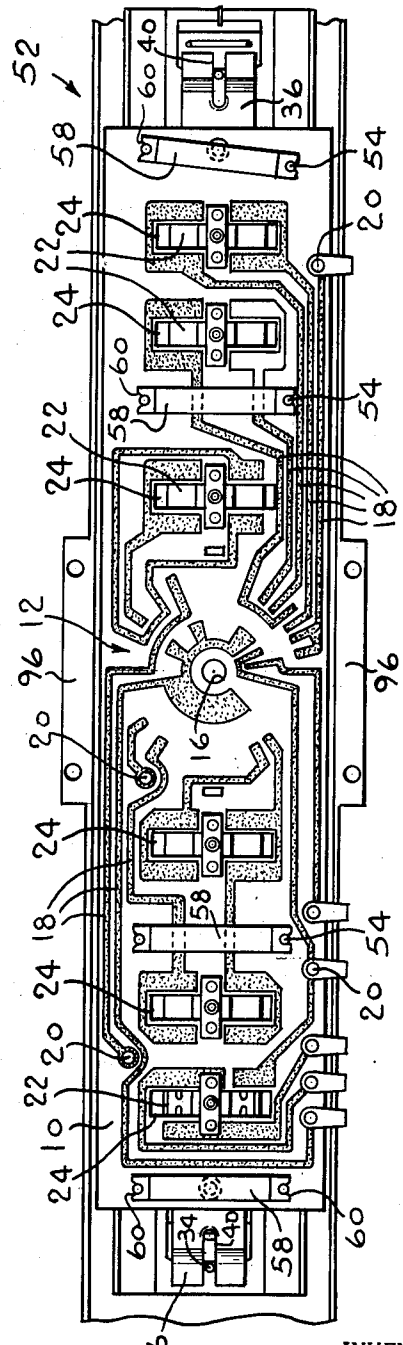

FIG. 3

INVENTOR.
DONALD M. STRATHEARN
BY
ATTORNEY

July 3, 1962 D. M. STRATHEARN 3,042,763

TIMER

Filed Nov. 9, 1959 5 Sheets-Sheet 3

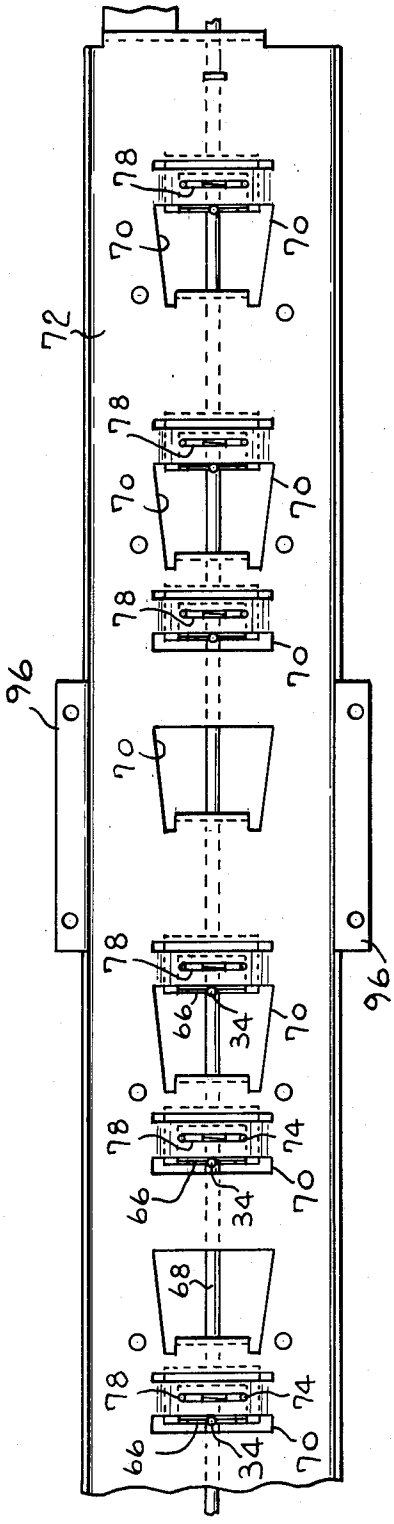

FIG. 5

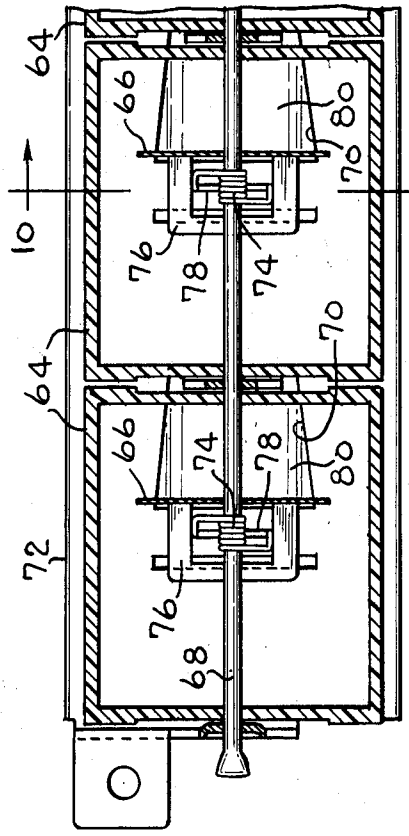

FIG. 9

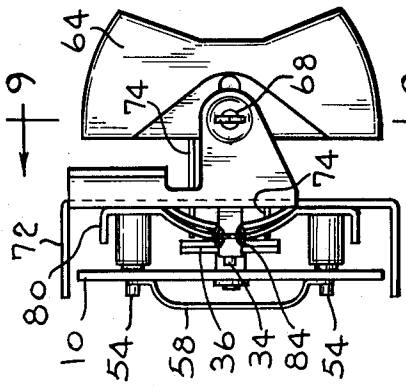

FIG. 8

INVENTOR.
DONALD M. STRATHEARN
BY
ATTORNEY

July 3, 1962 D. M. STRATHEARN 3,042,763

TIMER

Filed Nov. 9, 1959 5 Sheets-Sheet 4

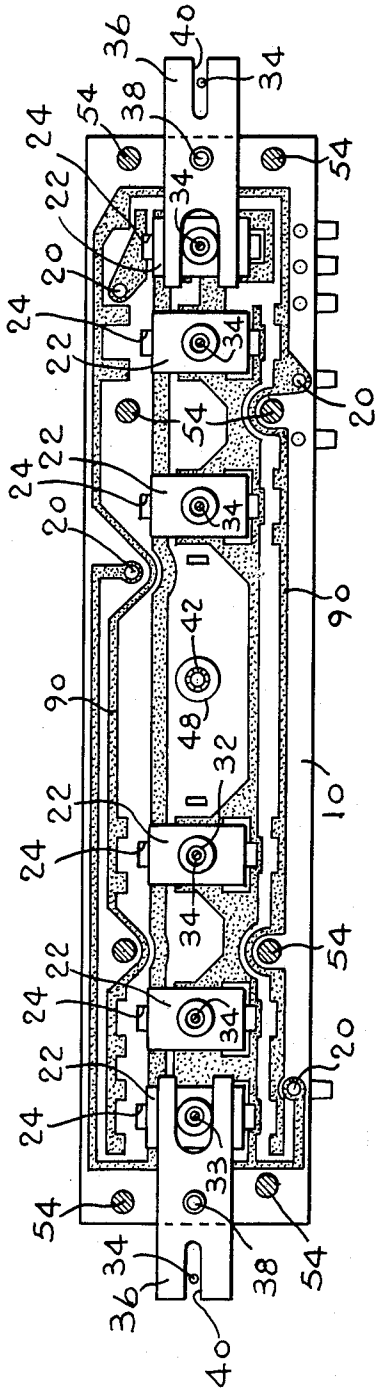

FIG. 6

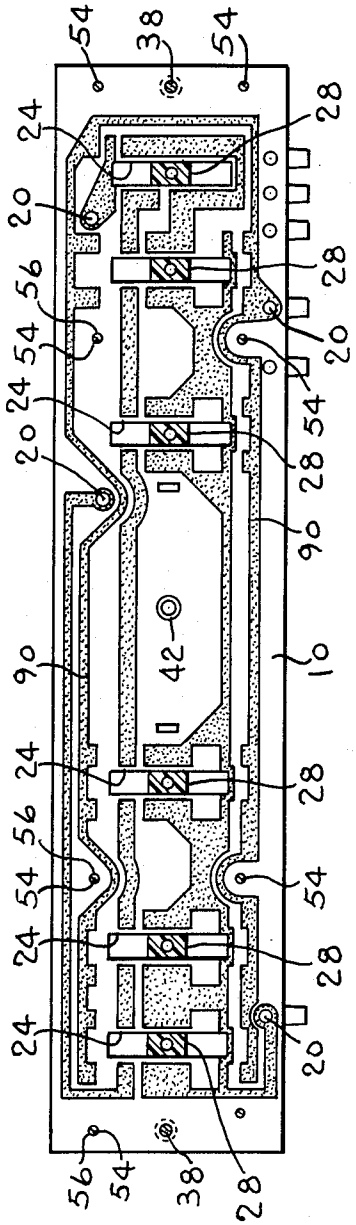

FIG. 7

INVENTOR.
DONALD M. STRATHEARN
BY
Bernard H. Michael
ATTORNEY

July 3, 1962 D. M. STRATHEARN 3,042,763

TIMER

Filed Nov. 9, 1959 5 Sheets-Sheet 5

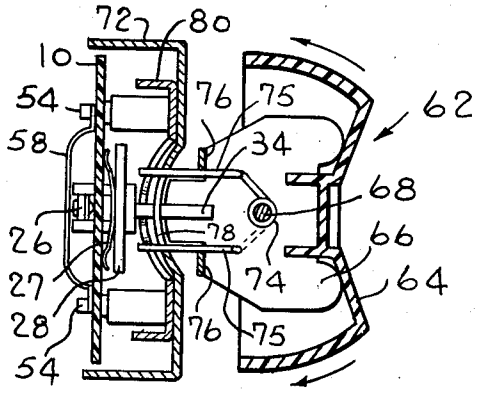

FIG. 10

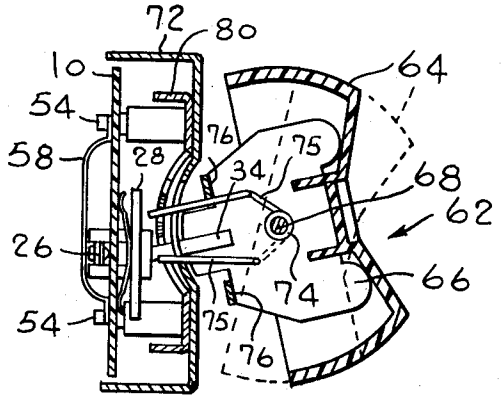

FIG. 11

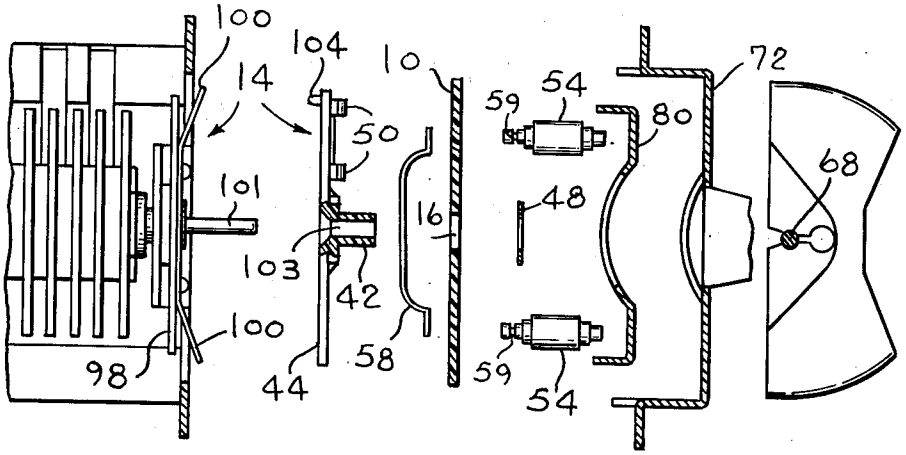

FIG. 12

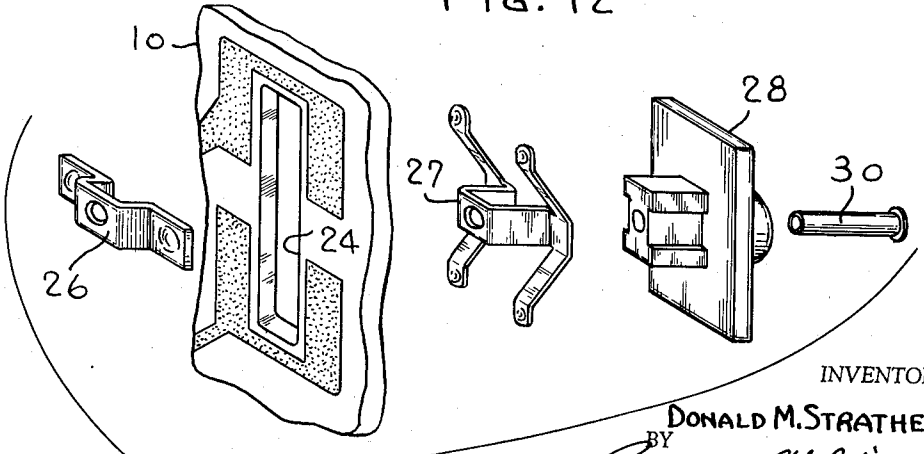

FIG. 15

INVENTOR.
DONALD M. STRATHEARN
BY
ATTORNEY

United States Patent Office 3,042,763 Patented July 3, 1962

3,042,763

TIMER

Donald M. Strathearn, Arlington Heights, Ill., assignor to Controls Company of America, Schiller Park, Ill., a corporation of Delaware

Filed Nov. 9, 1959, Ser. No. 851,704
8 Claims. (Cl. 200—38)

This invention relates to interval timers.

Timers of the type shown in Strathearn et al. application Serial No. 799,780, filed March 16, 1959, now U.S. Patent No. 2,995,143, have incorporated therein a printed circuit which is part of the seeking circuit so that upon closure of one of a number of selection switches the timer will be moved to a corresponding starting position. These switches are connected to the seeking circuit by means of a wiring harness.

The primary object of this invention is to eliminate the wiring harness and thereby reduce costs.

This is accomplished by providing the switch function directly on a printed circuit board which includes that portion of the seeking circuit necessary to set the timer. This type of circuit board makes it possible to fabricate a complete control package as a single unit which will include all of the components necessary for a fully automatic machine. A single control package of this type has one obvious drawback, if a malfunction of one of the components requires replacement of the entire unit the repair costs become undesirable. To avoid this, the components are made as separate units for easy assembly and disassembly so that a malfunction of one of the components will require replacement of only that one component.

Another object of this invention is, therefore, to assemble the package so that individual components may be quickly and easily disconnected from the package and a new component substituted if necessary which will result in a saving in repair cost.

Other objects and advantages will be pointed out in, or be apparent from the specifications and claims as will obvious modifications of the single embodiment shown in the drawings in which:

FIG. 1 is a front view of the control panel and timer motor;

FIG. 2 is a top view of FIG. 1;

FIG. 3 is a back view of the control panel with the timer motor removed and the wiper arm removed;

FIG. 4 is similar to FIG. 3 with the printed circuit board removed;

FIG. 5 is similar to FIG. 4 with the sliding lock member removed;

FIG. 6 is a back side view of the control member;

FIG. 7 is similar to FIG. 6 with the sliding members cut off;

FIG. 8 is a left end view of FIG. 1;

FIG. 9 is taken along 9—9 of FIG. 8 showing the biasing means for the control buttons;

FIG. 10 is taken along line 10—10 of FIG. 9 showing the control button in a neutral position;

FIG. 11 is similar to FIG. 10 but moved to another position;

FIG. 12 is a fragmentary view taken along line 12—12 of FIG. 1 and shows the parts disassembled;

FIG. 13 is a front view of the connector to the wiper arm;

FIG. 14 is a front view of the wiper arm; and

FIG. 15 is an exploded view of the contact unit for both sides of the circuit board.

The control unit (package) includes the same components required to obtain multiple programs of operation in a seeking type system as set forth in the application mentioned above but simplifies the electrical system by

providing the wiring harness required by that system on a circuit board which includes the seeking circuits. Thus circuit board 10 has seeking circuit portion 12 centrally disposed on one side of the board and wiper assembly 14 mounted to rotate in aperture 16 so that it contacts the seeking circuits. Selection circuits 18 for the programs of operation are connected to the seeking circuits and are provided on both sides of the board. Rivets 20 interconnect the selection circuits so that switch functions can be made on both sides of the board. Programs are actuated by switches 22 which are movable in slots 24 from a neutral position either up or down to close the circuit for the program selected.

As shown and described in the Strathearn application the wiper assembly which is connected to the timer is rotated until the wiper brushes the circuit for the program selected. In the application the wiper seeks an open circuit while in the present application the circuits are arranged so that the wiper seeks a closed circuit. It should be obvious that from the description hereinafter the seeking circuit can be arranged so that the wiper seeks either an open or a closed circuit.

As shown in FIG. 15, the switches include bridge contact 26 positioned on one side of the circuit board and spring contact 27 positioned on the other side of the circuit board, both of which are secured to slide block 28 by pin 30. The slide blocks are provided with an aperture 32 in which actuating rods 34 are inserted in a manner to be described hereinafter to move the switch to an operative position. The switches at the ends of the circuit board are actuated through rocker arms 36 pivoted on pins 38 which engage the slide block at one end and have slots 40 in the other end to engage the actuator rods mentioned above. The wiper assembly, FIG. 14, is mounted on the circuit board by inserting hub 42 on wiper plate 44 through aperture 16 and placing lock washer 48 thereon. The plate is rotated by a means to be described hereinafter so that brush or wiper 50 describes a circular path over the seeking circuit portion of the board.

The circuit board is mounted on switch panel 52 by placing the board on pins 54 which project through holes 56 in the board. The ends of spring clips 58 have slots 60 therein which fit in grooves 59 (FIG. 12) in the head of each of the pins extending beyond the board. The clips are compressed between two of the pins with the bias of the spring forcing the ends of the clips against the heads of the pins to hold the clip in position and prevent the board from slipping off of the pins. The switch panel includes a plurality of rocker-type switch actuators 62 having plastic indicators 64 secured to plates 66 which are mounted to rotate on shaft 68. Rods 34 secured to plates 66 extend through openings 70 in housing 72 and engage apertures 32 in the slide blocks. The rods on the outer switch actuators engage slots 40 in the rocker arms to actuate the end switches. This method of actuating the end switches can be eliminated by merely lengthening the circuit board so the rods on the end switches are opposite the end actuators. The actuators are biased to a neutral position by coil springs 74 having ends 75 which extend through brackets 76 on the plate and engage slot 78 in the housing. When the actuator is in the neutral position both ends of the spring will bear against the bracket, FIG. 10. When the actuator is rotated, FIG. 11, one end of the spring will be held by the slot 78 while the other end will be moved by the bracket in the direction of rotation. Upon release of the actuator the bias of the spring will move the button back to the neutral position unless prevented by some other means.

The actuators are held in the selected position by sliding lock plate 80 having slots 82 which allow the plate

to slide on pins 54 in the panel housing. The plate is biased to a locking position by spring 84 and is moved to an open position by the action of rods 34 on cam surfaces 86. When an actuator is pressed rod 34 is forced either up or down against either the upper or lower cam and on passing the high point on the cam the lock plate is returned to its original position by spring 84 thereby holding the rod in the upper or lower position. The seeking system for setting the timer is actuated by closing a momentary switch which starts shaded pole motor 87 to rotate timer 88 which drives the wiper assembly to the selected starting point. Circuit 90 (FIGS. 6 and 7) on the printed circuit board is the circuit for the momentary switch and must be contacted momentarily by the actuated switch before the shaded pole motor will start to run. This is accomplished by the locking plate which allows a small amount of overtravel for pin 34 on cam surface 86 provided on the upper and lower part of the cam. On pressing an actuator, the switch will be moved to the end of slot 24 so that the switch contacts circuit 90 and on releasing the actuator, spring 74 will move rod 34 toward the neutral position until the rod seats in the upper or lower low point of the cam. When the selected cycle is completed and a second actuator is pushed, the sliding lock plate will again be moved against the bias of spring 84 due to the action of the newly selected actuator rod on the cam surface and, on reaching the high point on the cam, the pin on the first button will be high enough on the cam so that the bias of coil spring 74 will snap the button to the neutral position. With this arrangement, the possibility of two circuits being actuated simultaneously is prevented. Timer 88 is mounted on flanges 96 on the switch housing with arbor shaft 101 projecting into aperture 103 in hub 42 and drive plate 98 operatively engaging the wiper plate. A leaf spring 100 is secured to the drive plate and abuts the ends of the wiper plate when assembled to bias it in a plane approximately parallel to the plane of the circuit board to assure contact of the wiper brush with the seeker circuits. Slot 102 in the end of the leaf spring engages boss 104 on the wiper plate to give a positive drive between the timer and the timer assembly. It can be seen that with this arrangement high speed advance of the timer by the shaded pole motor will rotate the wiper assembly over the seeking circuits until the closed circuit indicating the program selected is contacted.

In disassembling the package, the timer is removed from the switch panel housing so that the arbor shaft can be slipped out of the wiper assembly hub and the leaf spring disengaged from the wiper assembly. If the timer has to be replaced a new one can be mounted on the switch panel housing by merely inserting the arbor shaft and the wiper hub and aligning the slot in the leaf spring with the bars on the wiper plate. Since the position of the wiper brush determines the point of starting, this structure assures that the timer is always aligned with the wiper assembly. Since circuit boards are subject to being cracked, mounting of the timer on the switch panel housing relieves the board of an excessive strain.

We claim:

1. A circuit board for an interval timer comprising, a non-conductive board including a searching circuit printed thereon which has starting points located in a prescribed path, circuit means moveable in the prescribed path to determine the presence of an operating condition at one of the starting points, program selection switches integral with and slidable on the board, and selection circuits printed on the board and connected to the searching circuit, said switches having normal and actuating positions with respect to the selection circuits whereby upon actuation of a selection switch the circuit condition sought by the moving circuit means is established.

2. A circuit board for an interval timer comprising a board having circuits printed thereon, one of said circuits having starting points in a prescribed path, the other of said circuits forming selector circuits for establishing operating conditions at the starting points, means moveable in the prescribed path for determining the presence of an operating condition at one of the starting points, and selector switches integral with and slidable on the board and moveable to actuate one of said other circuits to thereby create an operating condition at one of the starting points.

3. An interval timer comprising, a circuit board having a searching circuit printed on the board and starting points located in a prescribed path in the searching circuit, selector switches slideably mounted on the board, selection circuits printed on the board and being connected to the starting points, a selector panel having switch actuators mounted thereon, snap means for mounting the circuit board on the selector panel, said switch actuators operatively engaging the switches when the circuit board is mounted on the panel, and means moving over the prescribed path for determining the starting point activated by a selected switch.

4. An interval timer comprising a circuit board having seeking circuits and selection circuits connected to the seeking circuits printed thereon, switch means integral with the board for selectively actuating the selection circuits, wiper means mounted on the board for wiping the seeking circuits to determine the selected circuits, a selector panel having switch actuators mounted thereon, snap means for mounting the circuit board on the selector panel, said switch actuators operatively engaging the switches when the board is mounted on the panel, timer means including a wiper drive means and means for connecting the timer means to the selector panel so that the drive means operatively engages the wiper means whereby on actuation of a switch actuator the drive means will advance the timer until the wiper means locates the selected circuit.

5. A timer-control system comprising a selector panel including a plurality of switch actuators, a circuit board having seeking circuits and wiper means mounted thereon, program circuits printed on the board, switch assemblies integral with the board for establishing a circuit condition in the program circuits, clip means for securing the circuit board to the control panel, means integral with each actuator for operatively engaging a corresponding switch assembly when the board is secured to the selector panel, a timer including a wiper drive means, and means for securing the timer to the control panel so that the drive means operatively engages and aligns the wiper means with the seeking circuits, whereby said timer-control system can be disassembled by removing the timer securing means and the clip means.

6. An interval timer comprising a selector panel, a plurality of switch actuators mounted on the panel, means for locking one of said actuators in the selected position and allowing the previously selected button to return to a neutral position, a circuit board having a seeking circuit and a wiper assembly positioned to engage the seeking circuit mounted thereon, a switch assembly corresponding to each actuator on the selector panel, said switch assemblies being slidably mounted on the circuit board in operative engagement with the seeking circuit means for securing the circuit board to the selector panel, means integral with each actuator for operatively engaging the switches on the circuit board when the board is secured to the selector panel, a timer including a drive assembly, means for connecting the timer to the selector panel so that the drive assembly operatively engages the wiper assembly whereby said actuators and drive assembly are operative on the circuit board only when assembled.

7. An interval timer including a switch actuating cam drum, a selector panel, a circuit board operatively connected to the selector panel, wiper means mounted on

the circuit board, said timer being secured to the selector panel, and means rotatable with the cam drum operatively engaging the wiper means so that the wiper means is oriented with respect to the programs on the cam drum.

8. An interval timer comprising a selector switch panel, a circuit board secured to the panel and including a searching circuit, a wiper wiping the searching circuit, selection switches mounted on the circuit board and operatively connected to the selector panel, selection circuits connecting the switches to the searching circuit, a switch

actuating cam drum, and means rotatable with the cam drum for centering and aligning the wiper with respect to the cam drum.

References Cited in the file of this patent

UNITED STATES PATENTS

2,641,661	Puerner et al.	June 9, 1953
2,794,081	Luhn	May 28, 1957
2,841,660	Tabet	July 1, 1958
2,896,033	Hartz	July 21, 1959