(19) Europäisches Patentamt
European Patent Office
Office européen des brevets

(11) **EP 3 950 458 B1**

(12) **EUROPEAN PATENT SPECIFICATION**

(45) Date of publication and mention of the grant of the patent:
28.02.2024 Bulletin 2024/09

(21) Application number: **19926114.0**

(22) Date of filing: **05.11.2019**

(51) International Patent Classification (IPC):
B61D 23/00 *(2006.01)*

(52) Cooperative Patent Classification (CPC):
B61D 23/025

(86) International application number:
PCT/CN2019/115521

(87) International publication number:
WO 2020/215656 (29.10.2020 Gazette 2020/44)

(54) BOARDING AUXILIARY DEVICE OF RAIL VEHICLE

EINSTIEGSHILFSVORRICHTUNG FÜR SCHIENENFAHRZEUG

DISPOSITIF AUXILIAIRE D'EMBARQUEMENT DE VÉHICULE FERROVIAIRE

(84) Designated Contracting States:
AL AT BE BG CH CY CZ DE DK EE ES FI FR GB GR HR HU IE IS IT LI LT LU LV MC MK MT NL NO PL PT RO RS SE SI SK SM TR

(30) Priority: **25.04.2019 CN 201910337942**

(43) Date of publication of application:
09.02.2022 Bulletin 2022/06

(73) Proprietor: **CRRC Zhuzhou Locomotive Co., Ltd.**
Zhuzhou, Hunan 412001 (CN)

(72) Inventors:
- **XIAO, Dianxi**
  Zhuzhou, Hunan 412001 (CN)
- **XIE, Hongbing**
  Zhuzhou, Hunan 412001 (CN)
- **DAI, Longming**
  Zhuzhou, Hunan 412001 (CN)
- **LI, Jie**
  Zhuzhou, Hunan 412001 (CN)

(74) Representative: **Alpspitz IP**
Longinusstraße 1
81247 München (DE)

(56) References cited:
CN-A- 106 476 814
CN-A- 106 564 511
CN-A- 107 207 016
CN-A- 107 207 016
CN-A- 108 609 552
CN-A- 110 015 315
CN-U- 204 279 245
CN-U- 207 389 201
CN-U- 207 809 398
DE-A1- 19 955 877
IT-A1- TO20 100 946
JP-A- H0 986 402
JP-A- H07 108 925
KR-A- 20100 089 925

Note: Within nine months of the publication of the mention of the grant of the European patent in the European Patent Bulletin, any person may give notice to the European Patent Office of opposition to that patent, in accordance with the Implementing Regulations. Notice of opposition shall not be deemed to have been filed until the opposition fee has been paid. (Art. 99(1) European Patent Convention).

EP 3 950 458 B1

Description

Field of the Invention

[0001] The present invention relates to a boarding auxiliary device of a rail vehicle, belongs to the technical field of boarding equipment of rail vehicles, and is particularly suitable for boarding assistance of persons with mobility impairments.

Background of the Invention

[0002] Domestic and international multiple unit trains and other rail vehicles run on a variety of lines, and there is a demand for vehicles to be used on different lines. The heights of existing platforms in Europe are mostly 380mm, 550mm and 760mm, and the existing lines in China also have platforms of different heights. The diversification of the lines brings the uncertainty of the platform height, which requires the rail vehicles to adapt to different platform heights at the same time. Different platform heights bring inconvenience to the boarding of people with mobility impairments and the difficulty in the design of vehicle entrances. At present, the European multiple unit trains usually use manual pedals and semi-automatic boarding auxiliary devices or ground auxiliary boarding devices, and the people with mobility impairments can board with the assistance of the staff, which affects the travel of of the people with mobility impairments and increases the transportation operation cost.

[0003] The Chinese utility patent (Publication number: CN204279245U) discloses a lifting device for boarding vehicles, which includes a lifting platform and a lifting mechanism located below the lifting platform. The lifting mechanism includes a guide rail, a first scissor lifting arm, a second scissor lifting arm, and a hydraulic cylinder. The disadvantage of this lifting device for boarding vehicles is that it occupies a large installation space.

Summary of the Invention

[0004] Aiming at the boarding requirement that rail vehicles need to simultaneously adapt to a variety of platform heights and people with mobility impairments, the present invention provides a boarding auxiliary device of a rail vehicle, in order to solve the technical problems of the mismatch between the entrance of the rail vehicle and a platform and the quick boarding of people with mobility impairments. The specific technical solution is as follows.

[0005] A boarding auxiliary device of a rail vehicle includes a boarding platform and a lifting mechanism located below the boarding platform, the lifting mechanism includes a bidirectional power mechanism, a guide rail, two first support rods and two second support rods, the movement directions of two power output ends of the bidirectional power mechanism are opposite to each other and are parallel to the boarding platform, and the extension direction of the guide rail is parallel to the movement directions; the two first support rods and the two second support rods are symmetrically arranged relative to a direction perpendicular to the boarding platform, the upper ends of the two first support rods are hinged to the boarding platform, and the lower ends of the two first support rods are movably connected to the guide rail and can move along the guide rail; and the upper ends of the two second support rods are respectively hinged to the middle of the corresponding two first support rods, and the lower ends of the two second support rods are respectively hinged to the two power output ends of the bidirectional power mechanism.

[0006] Further, when the boarding platform is at the lowest position, the included angle between the first support rod and the boarding platform is less than or equal to the included angle between the second support rod and the boarding platform; and when the boarding platform is at a raised position, the included angle between the first support rod and the boarding platform is less than the included angle between the second support rod and the boarding platform.

[0007] Further, the bidirectional power mechanism is a bidirectional hydraulic cylinder or a bidirectional cylinder, the bidirectional hydraulic cylinder or the bidirectional cylinder has two cylinder rods that act synchronously and move in opposite directions, and the lower ends of the two second support rods are respectively hinged to the two cylinder rods.

[0008] Further, the bidirectional power mechanism is a screw mechanism with two nuts, the two nuts are installed on two threaded sections screwed in opposite directions of a screw, and the lower ends of the two second support rods are respectively hinged to the two nuts.

[0009] Preferably, two sets of lifting mechanisms are provided, which are respectively located below the two end parts of the boarding platform.

[0010] When only one set of lifting mechanism is provided, a guiding mechanism can be added to guide the lifting of the boarding platform.

[0011] Further, a telescopic pedal is further arranged in the boarding platform, and the telescopic pedal can extend out from the side of the boarding platform. Preferably, the telescopic pedal adopts a multi-stage telescopic structure.

[0012] Further, the boarding platform includes a platform pedal, a jacking bracket and a pedal guide rail, the jacking bracket and the pedal guide rail are fixedly arranged on the lower surface of the platform pedal, and the jacking bracket is hinged to the upper end of the first support rod; and the pedal guide rail is used for guiding the telescopic pedal.

[0013] The boarding platform of the present invention can be installed as part of a vehicle body floor and is at the same height as a vehicle floor; and the lifting mechanism enables the boarding platform to ascend or descend to meet boarding requirements of platforms of different heights; and when the height of the lifting platform

is basically the same as that of the platform, the telescopic pedal can be used as a pedal to make up the gap between the vehicle and the platform, so that a platform gap pedal can be replaced. The lifting mechanism of the present invention is stable and reliable, which is beneficial to reducing the installation space.

Brief Description of the Drawings

[0014]

Fig. 1 is a three-dimensional schematic diagram of a boarding auxiliary device of the present invention (a boarding platform is at a raised position);
Fig. 2 is an upward view of the boarding auxiliary device of the present invention (the boarding platform is at the raised position);
Fig. 3 is an A-A view in Fig. 2;
Fig. 4 is a three-dimensional schematic diagram of another perspective of the boarding auxiliary device of the present invention (a telescopic pedal does not extend out);
Fig. 5 is an upward view of the boarding auxiliary device of the present invention (the telescopic pedal does not extend out);
Fig. 6 is a schematic cross-sectional view of a center line in Fig. 5; and
Fig. 7 is an upward three-dimensional diagram of the boarding platform.

[0015] In the figures: boarding platform 1, platform pedal 11, jacking bracket 12, pedal guide rail 13, bidirectional cylinder 2, cylinder rod 21, guide rail 3, first support rod 4, second support rod 5, telescopic pedal 6, first-stage pedal 61 and second-stage pedal 62.

Detailed Description of Embodiments

[0016] The present invention will be described in further detail below in conjunction with the drawings.

[0017] Referring to Fig. 1-7, a boarding auxiliary device of a rail vehicle includes a boarding platform 1 and a lifting mechanism located below the boarding platform 1, the lifting mechanism includes a bidirectional cylinder 2 (an example of a bidirectional power mechanism), a guide rail 3, two first support rods 4 and two second support rods 5, the bidirectional cylinder 2 has two cylinder rods 21 that act synchronously and move in opposite directions, the movement direction of the cylinder rod 21 is parallel to the boarding platform 1, and the extension direction of the guide rail 3 is parallel to the movement direction; the two first support rods 4 and the two second support rods 5 are symmetrically arranged relative to a direction perpendicular to the boarding platform, the upper ends of the two first support rods 4 are hinged to the boarding platform 1, and the lower ends of the two first support rods 4 are movably connected to the guide rail 3 and can move along the guide rail 3, as shown in Fig. 1 and Fig. 4, a pin is fixed at the lower end of the first support rods 4, and the pin is limited in a guide groove of the guide rail 3; and of course, other structural forms can also be adopted, as long as the lower ends of the first support rods 4 can be kept moving along the guide rail 3.

[0018] The upper ends of the two second support rods 5 are respectively hinged to the middle of the corresponding two first support rods 4 (it should be noted that the middle here is not necessarily the midpoint of the first support rod 4, as long as the hinge position is not at the two end parts of the first support rod 4), and the lower ends of the two second support rods 5 are respectively hinged to the two cylinder rods 21 (an example of power output ends) of the bidirectional cylinder 2.

[0019] The bidirectional cylinder 2 can be replaced with a screw mechanism with two nuts (not shown), the two nuts are installed on two threaded sections screwed in opposite directions of a screw, and the lower ends of the two second support rods 5 are respectively hinged to the two nuts. When the screw rotates, the moving speed of the two nuts is the same, and the moving directions are opposite, and the two nuts can play same role and effect as the bidirectional cylinder. Of course, the bidirectional cylinder can be replaced with a bidirectional hydraulic cylinder.

[0020] Preferably, two sets of lifting mechanisms can be provided, which are respectively located below the two end parts of the boarding platform 1, as shown in Figs. 4-5. Under the action of the two sets of lifting mechanisms, the lifting of the boarding platform 1 is more stable. Those skilled in the art can understand that when only one set of lifting mechanism is provided, a guiding mechanism can be added to guide the lifting of the boarding platform.

[0021] The boarding platform 1 includes a platform pedal 11, a jacking bracket 12 and a pedal guide rail 13, the jacking bracket 12 and the pedal guide rail 13 are fixedly arranged on the lower surface of the platform pedal 11, and the jacking bracket 12 is hinged to the upper end of the first support rod 4; a telescopic pedal 6 is arranged in the pedal guide rail 13, the pedal guide rail 13 is used for guiding the expansion and contraction of the telescopic pedal 6, and the telescopic pedal 6 can be stored in the pedal guide rail 13 of the boarding platform or extend out from the side of the boarding platform 1. Preferably, the telescopic pedal 6 adopts a multi-stage telescopic structure, as shown in Fig. 1 and Fig. 3, the telescopic pedal 6 includes a first-stage pedal 61 and a second-stage pedal 62, when in use, the first-stage pedal 61 extends out at first, and then the second-stage pedal 62 extends out. The telescopic driving device of the telescopic pedal 6 can adopt the prior art, for example, an air cylinder or a rack and pinion mechanism or the like. It should be noted that the boarding platform 1 is not limited to the above-mentioned structure. In some cases, the boarding platform 1 may not be provided with the telescopic pedal.

[0022] When in use, the guide rail 3 of the lifting mechanism can be welded on the vehicle body floor, or can be connected and fixed to the vehicle body floor through screws; the bidirectional cylinder 2 of the lifting mechanism is connected and fixed to the vehicle body floor through screws; and the lifting mechanism is connected to a vehicle body through the guide rail 3 and the bidirectional cylinder 2.

[0023] As shown in Fig. 1, when at work, the bidirectional cylinder 2 pushes the second support rod 5 outward, and then pushes the first support rod 4; the lower end of the first support rod 4 translates along the guide rail 3, the upper end pushes the boarding platform 1 to achieve the jacking of the boarding platform 1, and after the boarding platform 1 rises to a set height, the first-stage pedal 61 of the telescopic pedal 6 extends out and can tilt downward according to a set angle; and the second-stage pedal 62 extends out after the first-stage pedal 61 completely extends out.

[0024] Preferably, when the boarding platform 1 is at the lowest position, the included angle between the first support rod 4 and the boarding platform 1 is less than or equal to the included angle between the second support rod 5 and the boarding platform 1; and when the boarding platform is at a raised position, the included angle between the first support rod 4 and the boarding platform 1 is less than the included angle between the second support rod 5 and the boarding platform 1. Compared with the manner in which the bidirectional cylinder 2 is directly hinged to the lower end of the first support rod 4, the lifting mechanism of the present invention has the advantages that: when the boarding platform 1 is lifted, since the included angle between the second support rod 5 and the boarding platform 1 is greater, most of the driving force of the bidirectional cylinder 2 can be decomposed into an upward lifting force; after the boarding platform 1 is lifted in place, most of the weight on the boarding platform 1 can be decomposed into a pressure perpendicular to the boarding platform, the pressure is borne by the vehicle body, and the pressure that is decomposed into parallel to the cylinder rod is smaller, so that the bidirectional cylinder 2 bears less pressure. Therefore, the lifting mechanism of the present invention is not only beneficial for lifting, but also is beneficial for protecting the bidirectional cylinder 2. In addition, compared with the manner in which the bidirectional cylinder 2 is directly hinged to the lower end of the first support rod 4, the movement amount of the cylinder rod 21 of the bidirectional cylinder 2 of the lifting mechanism of the present invention is smaller, that is, the lifting is more efficient. At the same time, by adopting the lifting mechanism of the present invention, the bidirectional cylinder 2 is arranged parallel to the boarding platform 1, which can greatly save the installation space of the lifting mechanism.

[0025] The lifting mechanism adopted by the present invention is a mechanical link mechanism, and the lifting height can be adjusted by adjusting the size of the support rod, so that the lifting height is highly adaptable.

[0026] The embodiments of the present invention are described above with reference to the drawings. In the case of no conflict, the embodiments of the present invention and the features in the embodiments can be combined with each other. The present invention is not limited to the above-mentioned specific embodiments. The above-mentioned specific embodiments are only illustrative and not restrictive. Under the enlightenment of the present invention, those of ordinary skill in the art can still make a lot of forms without departing from the protection scope of the claims, and all of which fall within the protection scope of the present invention.

Claims

1. A boarding auxiliary device of a rail vehicle, comprising a boarding platform (1) and a lifting mechanism located below the boarding platform (1), wherein the lifting mechanism comprises a guide rail (3) and two first support rods (4), the two first support rods (4) are symmetrically arranged relative to a direction perpendicular to the boarding platform (1);
   wherein
   the lifting mechanism also comprises a bidirectional power mechanism and two second support rods (5), the movement directions of two power output ends of the bidirectional power mechanism are opposite to each other and are parallel to the boarding platform (1), and the extension direction of the guide rail (3) is parallel to the movement directions; the two second support rods (5) are symmetrically arranged relative to a direction perpendicular to the boarding platform (1), the upper ends of the two first support rods (4) are hinged to the boarding platform (1), and the lower ends of the two first support rods (4) are movably connected to the guide rail (3) and can move along the guide rail (3); and the upper ends of the two second support rods (5) are respectively hinged to the middle of the corresponding two first support rods (4), and the lower ends of the two second support rods (5) are respectively hinged to the two power output ends of the bidirectional power mechanism.

2. The boarding auxiliary device of the rail vehicle according to claim 1, wherein when the boarding platform (1) is at the lowest position, the included angle between the first support rod (4) and the boarding platform (1) is less than or equal to the included angle between the second support rod (5) and the boarding platform (1); and when the boarding platform (1) is at a raised position, the included angle between the first support rod (4) and the boarding platform (1) is less than the included angle between the second support rod (5) and the boarding platform (1).

3. The boarding auxiliary device of the rail vehicle ac-

cording to claim 1, wherein the bidirectional power mechanism is a bidirectional hydraulic cylinder or a bidirectional cylinder (2), the bidirectional hydraulic cylinder or the bidirectional cylinder (2) has two cylinder rods (21) that act synchronously and move in opposite directions, and the lower ends of the two second support rods (5) are respectively hinged to the two cylinder rods (21).

4. The boarding auxiliary device of the rail vehicle according to claim 1, wherein the bidirectional power mechanism is a screw mechanism with two nuts, the two nuts are installed on two threaded sections screwed in opposite directions of a screw, and the lower ends of the two second support rods (5) are respectively hinged to the two nuts.

5. The boarding auxiliary device of the rail vehicle according to claim 1, wherein two sets of lifting mechanisms are provided, which are respectively located below the two end parts of the boarding platform (1).

6. The boarding auxiliary device of the rail vehicle according to claim 1, wherein a telescopic pedal (6) is further arranged in the boarding platform (1), and the telescopic pedal (6) can extend out from the side of the boarding platform (1).

7. The boarding auxiliary device of the rail vehicle according to claim 6, wherein the telescopic pedal (6) adopts a multi-stage telescopic structure.

8. The boarding auxiliary device of the rail vehicle according to claim 6, wherein the boarding platform (1) comprises a platform pedal (11), a jacking bracket (12) and a pedal guide rail (13), the jacking bracket (12) and the pedal guide rail (13) are fixedly arranged on the lower surface of the platform pedal (11), and the jacking bracket (12) is hinged to the upper end of the first support rod (4); and the pedal guide rail (13) is used for guiding the telescopic pedal (6).

Patentansprüche

1. Einstiegshilfsvorrichtung eines Schienenfahrzeugs, mit einer Einstiegsplattform (1) und einem Hebemechanismus, der sich unterhalb der Einstiegsplattform (1) befindet, wobei der Hebemechanismus eine Führungsschiene (3) und zwei erste Haltestangen (4) aufweist, wobei die zwei ersten Haltestangen (4) relativ zu einer Richtung senkrecht zu der Einstiegsplattform (1) symmetrisch angeordnet sind; wobei der Hebemechanismus auch einen bidirektionalen Kraftmechanismus und zwei zweite Haltestangen (5) aufweist, die Bewegungsrichtungen von zwei Kraftabgabeenden des bidirektionalen Kraftmechanismus entgegengesetzt zueinander und parallel zu der Einstiegsplattform (1) sind, und die Erstreckungsrichtung der Führungsschiene (3) parallel zu den Bewegungsrichtungen ist; die zwei zweiten Haltestangen (5) symmetrisch relativ zu einer Richtung senkrecht zu der Einstiegsplattform (1) angeordnet sind, die oberen Ende der zweiten ersten Haltestangen (4) mit der Führungsschiene (3) bewegbar verbunden sind und sich entlang der Führungsschiene (3) bewegen können; und die oberen Enden der zwei zweiten Haltestangen (5) an der Mitte der entsprechenden zwei ersten Haltestangen (4) angelenkt sind, und die unteren Enden der zwei zweiten Haltestangen (5) jeweils an den zwei Kraftabgabeenden des bidirektionalen Kraftmechanismus angelenkt sind.

2. Einstiegshilfsvorrichtung des Schienenfahrzeugs nach Anspruch 1, bei der, wenn die Einstiegsplattform (1) in der untersten Stellung ist, der eingeschlossene Winkel zwischen der ersten Haltestange (4) und der Einstiegsplattform (1) kleiner oder gleich dem eingeschlossenen Winkel zwischen der zweiten Haltestange (5) und der Einstiegsplattform (1) ist; und wenn die Einstiegsplattform (1) in einer angehobenen Stellung ist, der eingeschlossene Winkel zwischen der ersten Haltestange (4) und der Einstiegsplattform (1) kleiner als der eingeschlossene Winkel zwischen der zweiten Haltestange (5) und der Einstiegsplattform (1) ist.

3. Einstiegshilfsvorrichtung des Schienenfahrzeugs nach Anspruch 1, bei der der bidirektionale Kraftmechanismus ein bidirektionaler Hydraulikzylinder oder ein bidirektionaler Zylinder (2) ist, der bidirektionale Hydraulikzylinder oder der bidirektionale Zylinder (2) zwei Zylinderstangen (21) aufweist, die synchron arbeiten und sich in entgegengesetzte Richtungen bewegen, und die unteren Enden der zwei zweiten Haltestangen (5) jeweils an die zwei Zylinderstangen (21) angelenkt sind.

4. Einstiegshilfsvorrichtung des Schienenfahrzeugs nach Anspruch 1, bei der der bidirektionale Kraftmechanismus einen Schraubmechanismus mit zwei Muttern ist, wobei die zwei Muttern auf zwei Gewindeabschnitten installiert werden, die in entgegengesetzten Richtungen einer Schraube verschraubt sind, und die unteren Enden der zwei zweiten Haltestangen (5) jeweils an den zwei Muttern angelenkt sind.

5. Einstiegshilfsvorrichtung des Schienenfahrzeugs nach Anspruch 1, bei der zwei Sätze von Hebemechanismen vorgesehen sind, die sich jeweils unterhalb der zwei Endteile der Einstiegsplattform (1) befinden.

6. Einstiegshilfsvorrichtung des Schienenfahrzeugs

nach Anspruch 1, bei der ein Teleskoppedal (6) ferner in der Einstiegsplattform (1) angeordnet ist, und das Teleskoppedal (6) sich von der Seite der Einstiegsplattform (1) nach außen erstrecken kann.

7. Einstiegshilfsvorrichtung des Schienenfahrzeugs nach Anspruch 6, bei der das Teleskoppedal (6) eine mehrstufige Teleskopstruktur aufweist.

8. Einstiegshilfsvorrichtung des Schienenfahrzeugs nach Anspruch 6, bei der die Einstiegsplattform (1) ein Plattformpedal (11), eine Hebehalterung (12) und eine Pedalführungsschiene (13) aufweist, wobei die Hebehalterung (12) und die Pedalführungsschiene (13) fest auf der unteren Fläche des Plattformpedals (11) angeordnet sind, und die Hebehalterung(12) an dem oberen Ende der ersten Haltestange (4) angelenkt ist; und die Pedalführungsschiene (13) verwendet wird zur Führung des Teleskoppedal (6).

Revendications

1. Dispositif auxiliaire d'embarquement d'un véhicule ferroviaire, comprenant une plate-forme d'embarquement (1) et un mécanisme de levage situé sous la plate-forme d'embarquement (1), dans lequel le mécanisme de levage comprend un rail de guidage (3) et deux premières tiges de support (4), les deux premières tiges de support (4) étant disposées symétriquement par rapport à une direction perpendiculaire à la plate-forme d'embarquement (1) ;
dans lequel
le mécanisme de levage comprend également un mécanisme d'alimentation bidirectionnel et deux secondes tiges de support (5), les directions de mouvement de deux extrémités de sortie d'énergie du mécanisme d'alimentation bidirectionnel sont opposées l'une à l'autre et sont parallèles à la plate-forme d'embarquement (1), et la direction d'extension du rail de guidage (3) est parallèle aux directions de mouvement ; les deux secondes tiges de support (5) sont disposées symétriquement par rapport à une direction perpendiculaire à la plate-forme d'embarquement (1), les extrémités supérieures des deux premières tiges de support (4) sont articulées à la plate-forme d'embarquement (1), et les extrémités inférieures des deux premières tiges de support (4) sont reliées de manière mobile au rail de guidage (3) et peuvent se déplacer le long du rail de guidage (3) ; et les extrémités supérieures des deux secondes tiges de support (5) sont respectivement articulées au milieu des deux premières tiges de support (4) correspondantes, et les extrémités inférieures des deux secondes tiges de support (5) sont respectivement articulées aux deux extrémités de sortie d'énergie du mécanisme d'alimentation bidirectionnel.

2. Dispositif auxiliaire d'embarquement du véhicule ferroviaire selon la revendication 1, dans lequel lorsque la plate-forme d'embarquement (1) est en position basse, l'angle inclus entre la première tige de support (4) et la plate-forme d'embarquement (1) est inférieur ou égal à l'angle inclus entre la seconde tige de support (5) et la plate-forme d'embarquement (1) ; et lorsque la plate-forme d'embarquement (1) est en position haute, l'angle compris entre la première tige de support (4) et la plate-forme d'embarquement (1) est inférieur à l'angle compris entre la seconde tige de support (5) et la plate-forme d'embarquement (1).

3. Dispositif auxiliaire d'embarquement du véhicule ferroviaire selon la revendication 1, dans lequel le mécanisme d'alimentation bidirectionnel est un cylindre hydraulique bidirectionnel ou un cylindre bidirectionnel (2), le cylindre hydraulique bidirectionnel ou le cylindre bidirectionnel (2) a deux tiges de cylindre (21) qui agissent de manière synchronisée et se déplacent dans des directions opposées, et les extrémités inférieures des deux secondes tiges de support (5) sont respectivement articulées sur les deux tiges de cylindre (21).

4. Dispositif auxiliaire d'embarquement du véhicule ferroviaire selon la revendication 1, dans lequel le mécanisme d'alimentation bidirectionnel est un mécanisme à vis avec deux écrous, les deux écrous sont installés sur deux sections filetées vissées dans les directions opposées d'une vis, et les extrémités inférieures des deux secondes tiges de support (5) sont respectivement articulées sur les deux écrous.

5. Dispositif auxiliaire d'embarquement du véhicule ferroviaire selon la revendication 1, dans lequel deux ensembles de mécanismes de levage sont prévus, qui sont respectivement situés sous les deux parties d'extrémité de la plate-forme d'embarquement (1).

6. Dispositif auxiliaire d'embarquement du véhicule ferroviaire selon la revendication 1, dans lequel une pédale télescopique (6) est également disposée dans la plate-forme d'embarquement (1), et la pédale télescopique (6) peut s'étendre sur le côté de la plate-forme d'embarquement (1).

7. Dispositif auxiliaire d'embarquement du véhicule ferroviaire selon la revendication 6, dans lequel la pédale télescopique (6) adopte une structure télescopique à plusieurs étages.

8. Dispositif auxiliaire d'embarquement du véhicule ferroviaire selon la revendication 6, dans lequel la plateforme d'embarquement (1) comprend une pédale de

plate-forme (11), un support de vérin (12) et un rail de guidage de pédale (13), le support de vérin (12) et le rail de guidage de pédale (13) sont disposés de manière fixe sur la surface inférieure de la pédale de plate-forme (11), et le support de vérin (12) est articulé à l'extrémité supérieure de la première tige de support (4) ; et le rail de guidage de pédale (13) est utilisé pour guider la pédale télescopique (6).

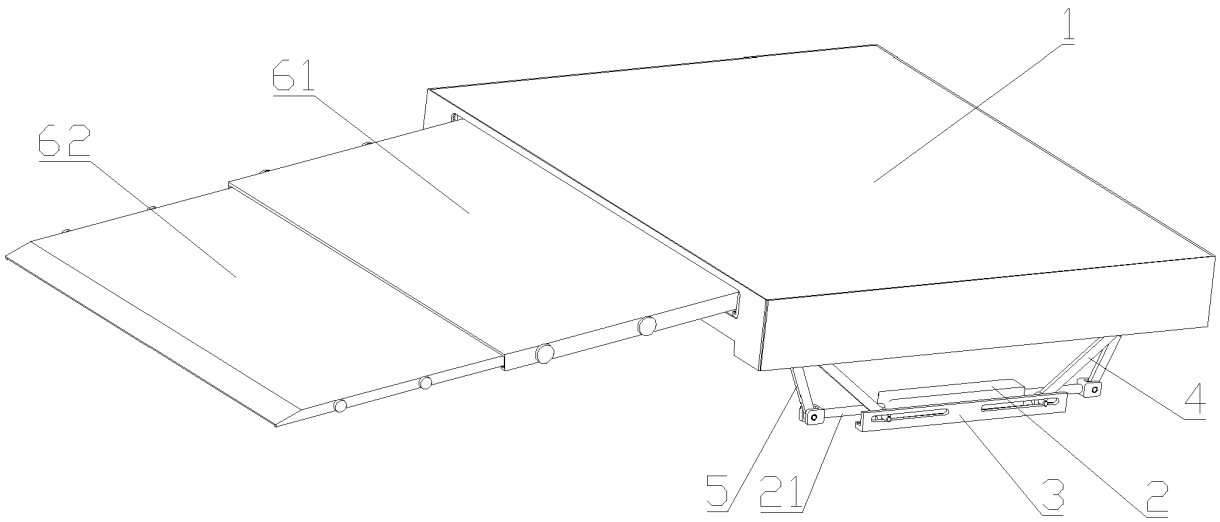

Fig. 1

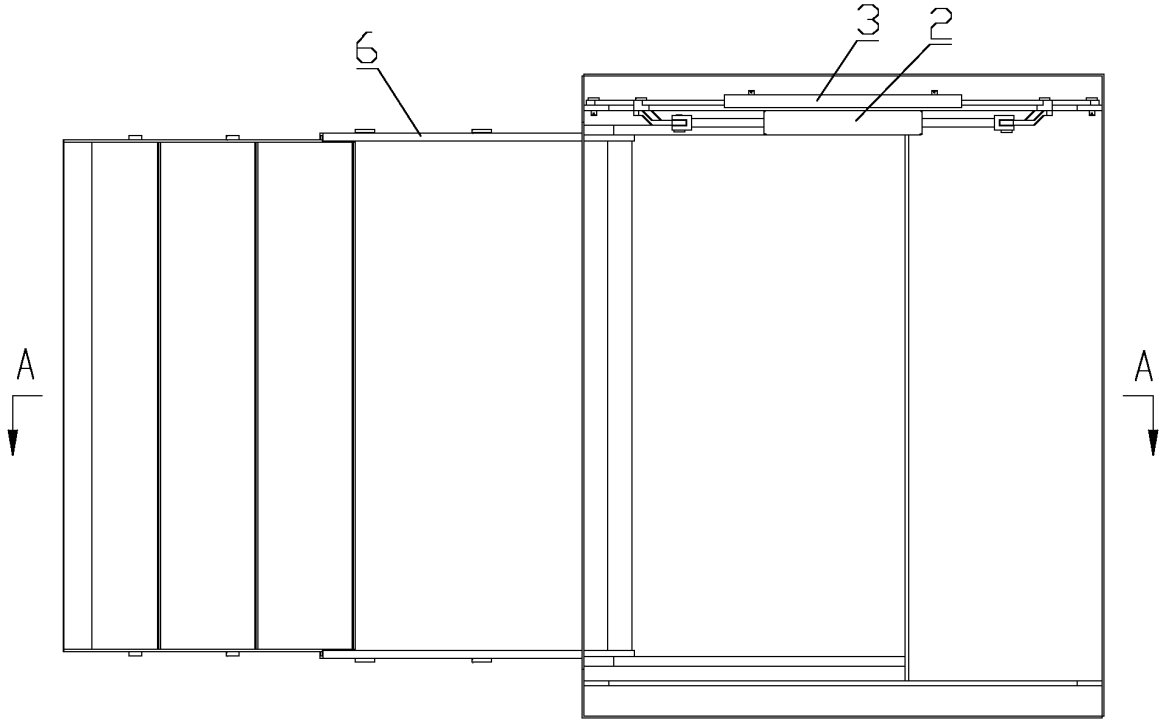

Fig. 2

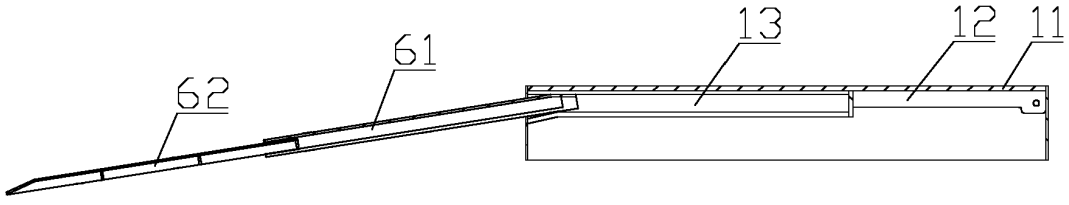

Fig. 3

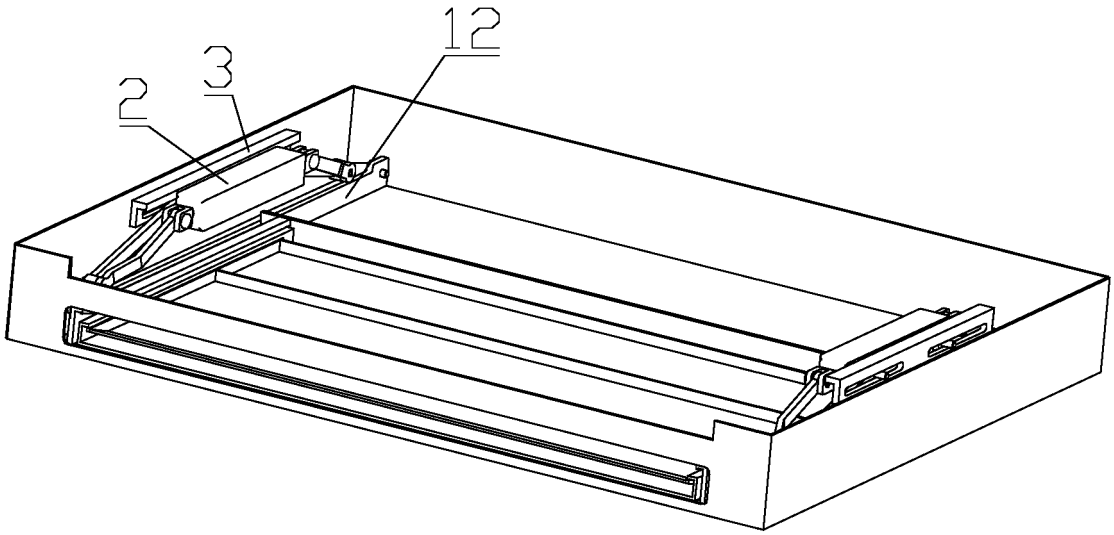

Fig. 4

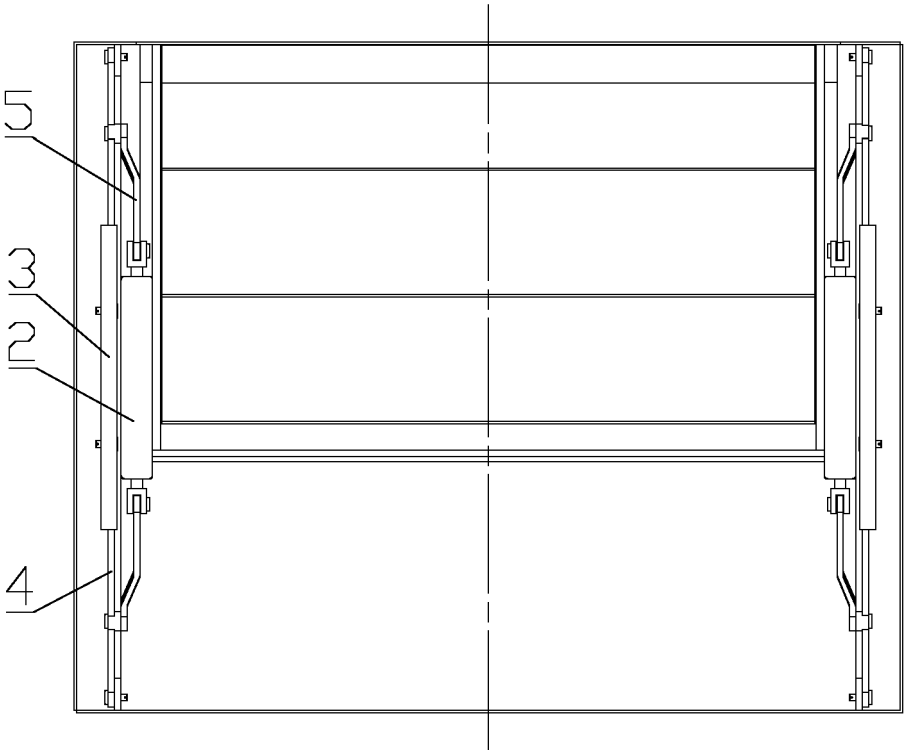

Fig. 5

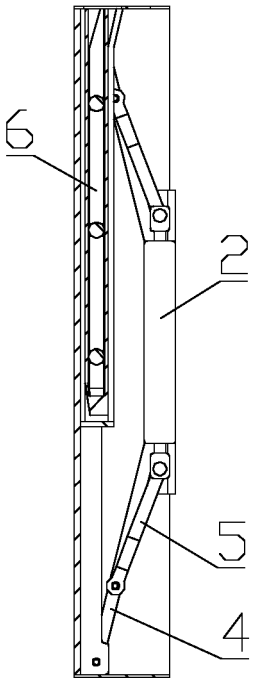

Fig. 6

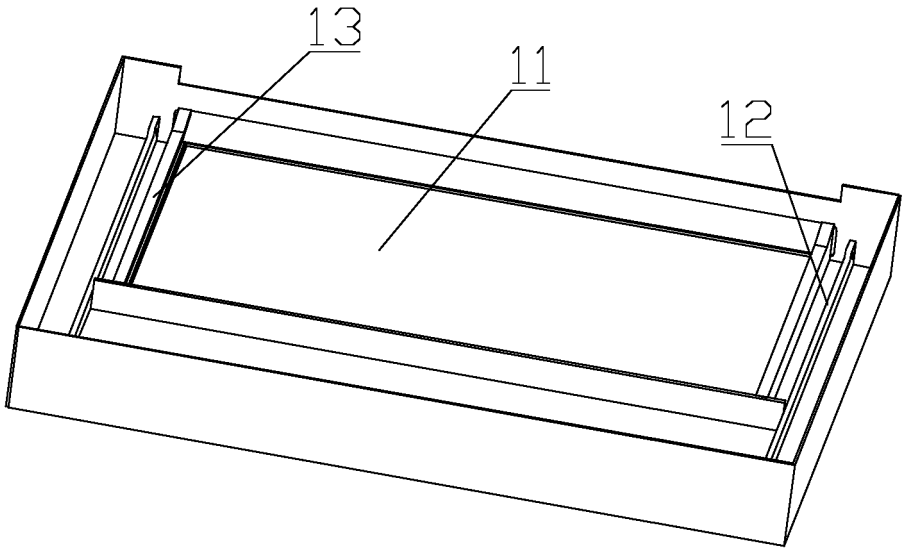

Fig. 7

REFERENCES CITED IN THE DESCRIPTION

This list of references cited by the applicant is for the reader's convenience only. It does not form part of the European patent document. Even though great care has been taken in compiling the references, errors or omissions cannot be excluded and the EPO disclaims all liability in this regard.

Patent documents cited in the description

- CN 204279245 U **[0003]**