(No Model.)

J. M. BIRTELS.

CAR COUPLING.

No. 456,080. Patented July 14, 1891.

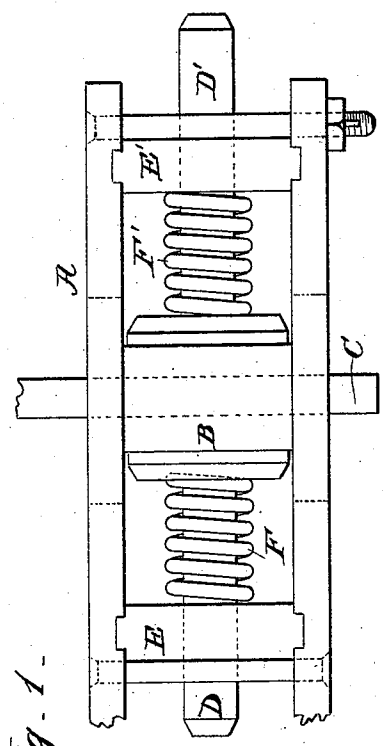

Fig. 1.

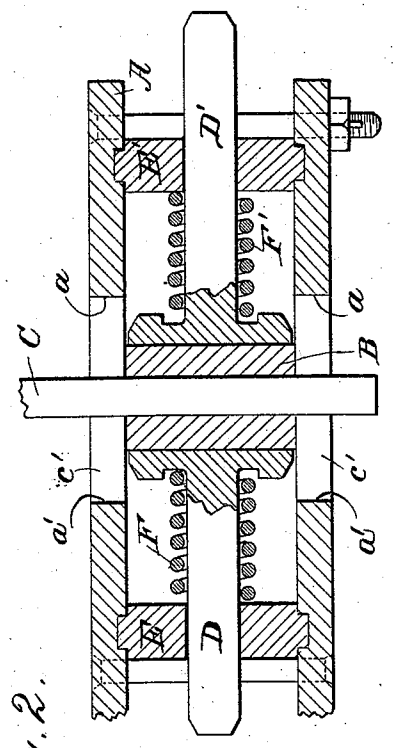

Fig. 2.

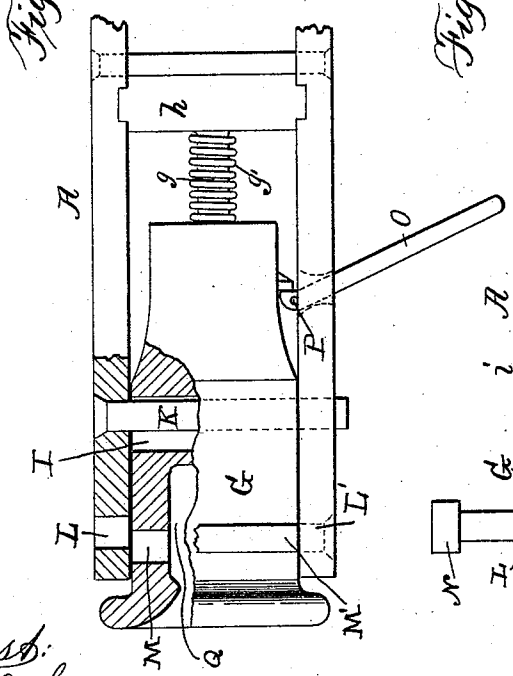

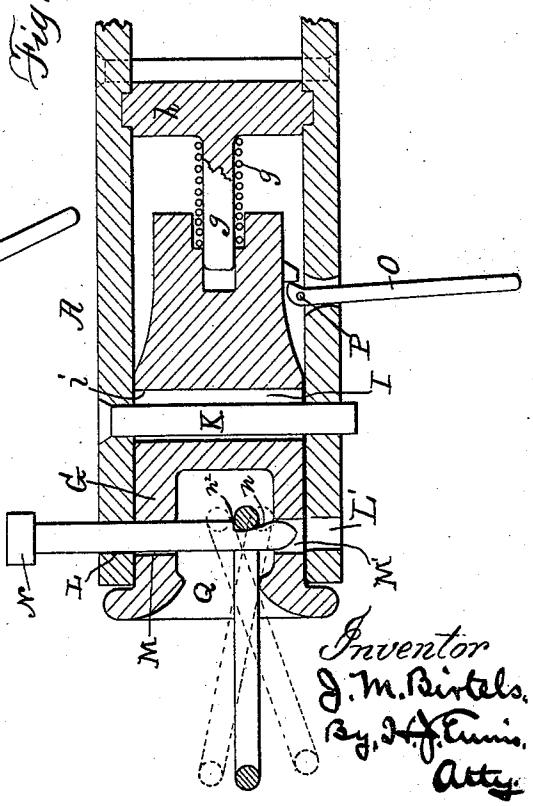

Attest:
Geo. T. Smallwood.
Geo. McGovern.

Inventor
J. M. Birtels.
By J. H. Timis.
Atty.

THE NORRIS PETERS CO., PHOTO-LITHO., WASHINGTON, D. C.

UNITED STATES PATENT OFFICE.

JOHN M. BIRTELS, OF BALTIMORE, MARYLAND.

CAR-COUPLING.

SPECIFICATION forming part of Letters Patent No. 456,080, dated July 14, 1891.

Application filed May 20, 1891. Serial No. 393,458. (No model.)

To all whom it may concern:

Be it known that I, JOHN M. BIRTELS, a citizen of the United States, residing at Baltimore, in the State of Maryland, have invented certain new and useful Improvements in Car-Couplings; and I do declare the following to be a full, clear, and exact description of the invention, such as will enable others skilled in the art to which it appertains to make and use the same, reference being had to the accompanying drawings, and to the letters of reference marked thereon, which form a part of this specification.

My invention has relation to automatic coupling, and the object is to provide a simple, cheap, and effective coupler and draw-head; and to this end the novelty consists in the construction, combination, and arrangement of the parts of the same, as will be hereinafter more fully described, and particularly pointed out in the claims.

In the accompanying drawings the same letters of reference indicate like parts of the invention.

Figure 1 is a side elevation of my improved automatic car-coupler and draw-head, and Fig. 2 is a longitudinal section of the same.

A is the draw-bar proper, and it is secured to the bolster B of the car-body (not shown) by means of the king-pin C and the guide-rods D D′, working in guide-braces E E′, vertically secured to said bolster. Secured about said guide-rods D D′, between the bolster and the guide-braces, are buffer-springs F F′, which take up the longitudinal strain between the draw-bar and the car, both in drawing and backing, when the train is in motion. The king-pin C fits snugly in the bolster B, and passes through two oblong holes *c c′* in the top and bottom plate of the draw-bar, so that when the cars are coupled the first strain in moving forward is taken up by the buffer-spring F′ until it is nearly compressed, and then the rear ends *a a* of the oblong holes *c c′* bring up against the king-pin C, which then stands the entire strain, and when the train is backing the spring F first takes up the strain, and then the forward ends *a a′* of the holes *c c′* come in contact with the king-pin C and the strain is transferred to it, as in the first instance.

G is the draw-head, and it slides snugly between the forward ends of the draw-bar, its rear end being provided with a recess *h′*, in which slides a guide-rod *g*, encircled by a spiral spring *g′*, the guide-rod *g* being secured to a brace *h*, vertically secured in place in said draw-bar, the spring *g′* being located between said brace *h* and the rear end of the draw-head, and the tendency of said spring is to always press the draw-head out to its full limit, which is accomplished when the rear end *i* of the slot comes in contact with the bolt K, rigidly secured in the draw-head, the amount of play or backward and forward motion of the draw-head being limited by the length of the slot I.

L L′ are two holes in a vertical line in the forward end of the draw-bar, and M M′ are similar holes in the draw-head, and when the draw-head is pushed in to its full limit the four holes L L′ and M M′ are in line and admit of the coupling-pin N passing through them; but when the coupling-pin is withdrawn the spring *g′* forces the draw-head outwardly and the holes are out of line, or in the position shown in Fig. 1. If the draw-head is forced back, which can readily be done by the hand-lever O, fulcrumed at P in the lower plate of the draw-bar, as shown, the holes L and M are in line and the end of the coupling-pin inserted so as to project a short distance into the link-space Q, and by releasing the lever O the spring *g′* presses the draw-head forward, which tends to throw the pin-holes L and M out of line, and consequently binds the pin between them and supports it in an elevated position, and in this position if a car having the coupling-link in proper position to enter the space Q is locked up the link first enters the link-space Q, and then the draw-head on the adjoining car comes in contact with the draw-head G, forcing it backward until the forward end *i* of the slot I comes in contact with the bolt K, in which position of the parts the four holes L L′ and M M′ are in line, and the coupling-pin, which was supported in an elevated position, as heretofore described, is released and falls by gravity through the link and enters the two lower holes L′ and M′, thereby automatically coupling the cars, the head *n′* of the pin N pre-

venting it from dropping entirely through the holes. The lower portion of this coupling-pin N is provided with an inclined recess n, having an angular shoulder n^2, so that when the pin is inserted, as shown in Fig. 2, the rear end of the link enters said recess n and the shoulder n^2 rests upon the top of the link and supports it in a horizontal position, as shown, and in which position the car may be backed against an adjoining car similarly fitted, and when in contact with sufficient force the pin N is released and drops through into the holes L′ and M′, and the pin in the draw-head of the adjoining car, which was elevated to allow the link to enter, is at the same time released and drops through the outer end of the link, as hereinbefore described.

Having thus fully described my invention, what I claim as new and useful, and desire to secure by Letters Patent of the United States, is—

1. In a combined coupling and draw-bar, the combination, with a bolster B, provided with guide-rods D D′, springs F F′, and king-pin C, of the draw-bar A, having the oblong holes c c', through which the king-pin passes, and the guide-braces E E, substantially as shown and described.

2. The combination, with the draw-bar A, having a guide h, bolt K, and holes L L′, of the draw-head G, provided with the guide-rod g, spiral spring g', slot I, holes M M′, and link-space Q, substantially as shown and described.

3. The combination, with the draw-bar A, having guide h, bolt K, holes L L′, and hand-lever O, of the draw-head G, provided with the guide-rod g, spring g', slot I, holes M M′, and the coupling-pin having recess n and angular shoulder n^2, substantially as shown and described.

In testimony whereof I affix my signature in presence of two witnesses.

JOHN M. BIRTELS.

Witnesses:
HENRY J. ENNIS,
GEO. MCGOVERN.