(12) PATENT **(11)** Application No. **AU 200131332 B2**
(19) AUSTRALIAN PATENT OFFICE **(10)** Patent No. **775498**

(54) Title
Oiless rotary scroll air compressor air inlet valve

(51)[7] International Patent Classification(s)
F04C 018/02 **F04C 015/00**
F04C 002/02 **F04C 029/00**

(21) Application No: **200131332** (22) Application Date: **2001.03.27**

(30) Priority Data

(31) Number	(32) Date	(33) Country
09/584709	**2000.06.01**	**US**

(43) Publication Date : **2001.12.06**
(43) Publication Journal Date : **2001.12.06**
(44) Accepted Journal Date : **2004.08.05**

(71) Applicant(s)
Westinghouse Air Brake Technologies Corporation

(72) Inventor(s)
Michael V Karakis; Charlie E Jones

(74) Agent/Attorney
Griffith Hack,GPO Box 1285K,MELBOURNE VIC 3001

(56) Related Art
JP 04-350376
JP 04-350377
US 5395214

ABSTRACT OF THE DISCLOSURE

An air inlet valve assembly for a rotary scroll compressor is disclosed. The rotary scroll compressor includes stationary and orbiting scroll elements which are intermeshed and nested to form at least one spiraling compression pocket therebetween, a drive mechanism drives the orbiting scroll element in an orbit about the stationary scroll element, and an anti-rotation bearing device maintains the orbiting scroll element substantially non-rotational with respect to the stationary scroll element. The air inlet valve assembly supplies an uncompressed gas (e.g., ambient air) to the compression apparatus and prevents backward rotation of the orbiting scroll element when power to the drive mechanism is terminated. The air inlet valve assembly includes a valve piston positioned within an air intake channel leading to the suction region of the rotary scroll compressor, the valve piston having a first position blocking the air intake channel and a second position unblocking the air intake channel. A valve stem member is connected to a valve housing, the valve housing enclosed a valve cavity wherein the valve piston is located, the valve piston coacts with a valve seat formed on the valve housing, and stop surfaces are provided on the valve piston and the valve stem to limit movement of the valve piston toward the suction region of the rotary scroll compressor.

AUSTRALIA

Patents Act 1990

COMPLETE SPECIFICATION

STANDARD PATENT

Applicant(s):

WESTINGHOUSE AIR BRAKE TECHNOLOGIES CORPORATION

Invention Title:

OILESS ROTARY SCROLL AIR COMPRESSOR AIR INLET VALVE

The following statement is a full description of this invention, including the best method of performing it known to me/us:

OILESS ROTARY SCROLL AIR COMPRESSOR AIR INLET VALVE

FIELD OF THE INVENTION

The present invention relates, in general, to scroll compressors which are used to compress a fluid, for example, a gas such as a refrigerant for cooling purposes or ambient air in order to furnish a compressed air supply.

More particularly, the present invention relates to an improved air inlet valve assembly for use in such a rotary scroll compressor.

BACKGROUND OF THE INVENTION

So-called "scroll" compressors have achieved wider application recently, particularly in the fields of refrigeration and air conditioning, due to a number of advantages which they possess over reciprocating type compressors. Among these advantages are: low operating sound levels; reduction in "wear parts" such as compression valves, pistons, piston rings and cylinders (resulting in reduced maintenance); and increased efficiency as versus reciprocating compressor designs.

DESCRIPTION OF THE RELATED ART

While the number of wear parts in a scroll compressor may be reduced in comparison to a reciprocating type compressor, there are still a number surfaces which move relative to one another and lubrication between these surfaces cannot be ignored. One design for a refrigerant scroll compressor (e.g., a scroll compressor used in air conditioning, etc.) utilizes an oil sump located in the lowermost portion of the compressor housing and an oil pump which draws oil from the sump upward to lubricate the

moving parts of the compressor. The oil used as a lubricant in such a design is relatively free to mix with the air which is being compressed. Lubricating oil which becomes suspended in the refrigerant is, for the most part, separated therefrom by changing the direction of flow of the refrigerant and by impinging the refrigerant on surfaces located within the compressor. After it is separated, the oil is then drained back to the oil sump.

However, due to the gas having been relatively free to mix with the oil lubricant, the compressed gas exiting the scroll compressor may still have a relatively high degree of oil content. Such oil content may carry over to the compressed gas supply system and have deleterious effects such as reduced life of air driven mechanisms (e.g., air driven tools, brakes, etc.) which utilize the compressed gas supply as a power source.

It would therefore be advantageous for the present invention to provide a rotary scroll compressor which is "oiless" in the sense that the lubricant used to lubricate the various moving parts of the compressor is not intermingled with the gas being compressed. Thus, there is no contamination to the compressed gas due to the lubricant, and additional special provisions or designs need not be utilized for separating the lubricant from the compressed gas prior to using the compressed gas.

Furthermore, the present invention also preferably provides a novel and inventive air inlet valve assembly for a rotary scroll compressor which serves to provide gas to be compressed (e.g., ambient air) to the suction region of the compressor while preventing a backward rotation of the orbiting scroll element after the power to the orbiting drive mechanism has been terminated.

The present invention preferably provides an air inlet valve assembly which is inexpensive to manufacture and reliable in operation.

In addition to the advantages of the present invention described above, various other advantages of the

invention will become more readily apparent to those persons in the relevant art from the following more detailed description of the invention, particularly when such description is taken in conjunction with the attached drawing Figures and with the appended claims.

SUMMARY OF THE INVENTION

According to one aspect of the present invention, there is provided an air inlet valve assembly for a scroll compressor, the scroll compressor comprising a housing; a stationary scroll element mounted within the housing stationary with respect to the housing, the stationary scroll element including a stationary spiral flange; an orbiting scroll element disposed within the housing, each of the stationary and orbiting scroll elements having a central axis, the orbiting scroll element including an orbiting spiral flange, the stationary and orbiting spiral flanges being intermeshed and nested with one another to define a compression pocket therebetween; an orbital drive mechanism for driving the central axis of the orbiting scroll element in an orbit about the central axis of the stationary scroll element while maintaining the orbiting scroll element non-rotational with respect to the stationary scroll element; and an air inlet channel connecting to the compression pocket for supplying air to be compressed to the compression pocket, wherein the air inlet valve assembly comprises:

a valve housing connected to and disposed external to the stationary scroll element;

the valve housing being readily attachable to and detachable from the stationary scroll element;

the valve housing enclosing a valve cavity, comprising at least a portion of the air inlet channel; and

a valve piston positioned within said valve cavity;

the valve piston having a first position blocking the

air inlet channel and a second position unblocking the air inlet channel.

According to another aspect of the present invention, there is provided an improved air inlet valve assembly when used in a scroll compressor, the scroll compressor comprising a housing; a stationary scroll element disposed within the housing stationary with respect to the housing, the stationary scroll element including a stationary spiral flange; an orbiting scroll element disposed within the housing, each of the stationary and orbiting scroll elements having a central axis, the orbiting scroll element including an orbiting spiral flange, the stationary and orbiting spiral flanges being intermeshed and nested with one another to define a compression pocket therebetween; an orbital drive mechanism for driving the central axis of the orbiting scroll element in an orbit about the central axis of the stationary scroll element while maintaining the orbiting scroll element non-rotational with respect to the stationary scroll element; and an air inlet channel provided through the housing, the air inlet channel connecting to the compression pocket, wherein the improved air inlet valve assembly supplies air to be compressed to the compression pocket, said improved air inlet valve assembly comprises:

a valve housing connected to and disposed external to the stationary scroll element;

said valve housing being readily attachable to and detachable from the stationary scroll element;

said valve housing enclosing a valve cavity, said valve cavity comprising at least a portion of the air inlet channel; and

a valve piston positioned within said valve cavity;

said valve piston having a first position blocking the air inlet channel and a second position unblocking the air inlet channel.

According to another aspect of the present invention, there is provided a scroll compressor including an air

inlet valve assembly for supplying air to be compressed, comprising:

a housing;

a stationary scroll element mounted within said housing stationary with respect to said housing, said stationary scroll element including a stationary spiral flange;

an orbiting scroll element disposed within said housing, said orbiting scroll element including an orbiting spiral flange;

each of said stationary and orbiting scroll elements having a central axis;

said stationary and orbiting spiral flanges being intermeshed and nested with one another to define a compression pocket therebetween;

orbital drive means for driving said central axis of said orbiting scroll element in an orbit about said central axis of said stationary scroll element while maintaining said orbiting scroll element non-rotational with respect to said stationary scroll element; and

an air inlet channel provided through said housing, said air inlet channel connecting to said compression pocket; and

said air inlet valve assembly being for supplying air to be compressed to said compression pocket, said air inlet valve assembly comprising:

a valve housing connected to and disposed external to the stationary scroll element;

said valve housing being readily attachable to and detachable from the stationary scroll element;

said valve housing enclosing a valve cavity, said valve cavity comprising at least a portion of the air inlet channel; and

a valve piston positioned within said valve cavity, said valve piston having a first position blocking said

air inlet channel and a second position unblocking said air inlet channel.

The present invention will now be described by way of a particularly preferred embodiment, reference being made to the various Figures of the accompanying drawings, wherein:

BRIEF DESCRIPTION OF THE DRAWINGS

Fig. 1 is perspective view of an oiless rotary scroll compressor, constructed according to the present invention.

Fig. 2 is an exploded isometric view of the inventive oiless rotary scroll compressor.

Fig. 3 is a cross sectional elevational view of the inventive oiless rotary scroll compressor.

Fig. 4 is another cross sectional elevational view of the inventive oiless rotary scroll compressor, taken along a section rotated approximately 90° from the section of Fig. 3.

Fig. 5 is a cross sectional plan view of the inventive oiless rotary scroll compressor.

Fig. 6 is an exploded isometric view of a crankshaft used in the inventive oiless rotary scroll compressor.

Fig. 7 is a cross sectional elevational view of the crankshaft of Fig 6.

Fig. 8 is an exploded isometric view of an anti-rotation assembly employed in the inventive oiless rotary scroll compressor.

Fig. 9 is a cross sectional view of the anti-rotation assembly of Fig. 8.

Fig. 10 is a cross sectional elevational view of an angular contact bearing assembly which is preferably utilized in the anti-rotation assembly of Figs. 8 and 9.

Fig. 11 is a cross sectional view through an orbiting spiral flange and a stationary spiral flange of the inventive oiless rotary scroll compressor, showing a novel tipseal assembly for providing a substantially airtight seal therebetween.

Fig. 12 is an isometric view of a tipseal element utilized in the tipseal assembly of Fig. 11.

Fig. 13 is an enlarged view of a portion of the elevational cross section of Fig. 4, most particularly showing an air inlet valve assembly used to provide ambient air to be compressed to the inventive oiless rotary scroll compressor;

Fig. 14 is a cross sectional elevational view of an alternative embodiment of the air inlet valve assembly.

Fig 15 is an exploded isometric view of the alternative air inlet assembly of Fig. 14.

DETAILED DESCRIPTION OF THE PREFERRED EMBODIMENT

Prior to proceeding to a much more detailed description of the present invention, it should be noted that identical components which have identical functions have been identified with identical reference numerals throughout the several views illustrated in the drawing Figures for the sake of clarity and understanding of the invention.

Referring initially to Figs. 1 and 2, a scroll compressor constructed according to the present invention and generally designated by reference numeral 10 generally includes a bearing cap 12, a crankshaft 14 positioned within the bearing cap 12 and a stationary scroll 16. The stationary scroll 16 is bolted to the bearing cap 12 through a circular arrangement of bolts 18 with associated washers, lockwashers, etc. The stationary scroll 16 itself is provided with a series of radially extending fins 20 to

improve the dissipation of heat therefrom. In the presently preferred embodiment, the radially extending fins 20 are preferably provided in the form of a separate bolt-on heat sink. The radially extending fins 20 could, however, be furnished integral with the stationary scroll 16. A hood 22 substantially covers the fins 20 and is provided with a forced air intake 24 through which ambient air is preferably forced toward the stationary scroll 16 and fins 20 to aid in heat dissipation. This forced air escapes through a central aperture 26 and through openings 28 and 30 provided about the periphery of the hood 22. The central aperture 26 also provides clearance for a compressed air discharge port 32 located in the center of the stationary scroll 16, while the peripheral opening 30 additionally provides clearance for an air inlet valve assembly 34 disposed on a peripheral portion of the stationary scroll 16.

The crankshaft 14 is rotationally driven within the bearing cap 12 by a rotational power source of choice. For example, when the scroll compressor 10 is to be employed to supply compressed air for a pneumatic braking system of a diesel or electric rail transportation vehicle (e.g., a train or light rail vehicle), the crankshaft 14 will typically be rotationally driven by an electric motor. The crankshaft 14 in turn drives an orbiting scroll element 36 in an orbital motion within the bearing cap 12. The orbiting scroll element 36 meshes with a stationary scroll element 37 (shown in Figs. 3 and 4) which is preferably formed

integrally with the stationary scroll 16 and is described more fully below. The mechanism by which the orbiting scroll element 36 is driven in such orbital fashion is more clearly shown in Figs. 3, 6 and 7, to which we now turn.

The crankshaft 14 includes an elongated shaft portion 38 having a central axis of rotation 40 about which the crankshaft 14 is rotationally driven by the power source of choice. An orbiting cylindrical bearing 42 is affixed to a first distal end of the crankshaft 14 adjacent the orbiting scroll element 36. Preferably, this first distal end of the crankshaft adjacent the orbiting scroll element 36 is provided with a recessed cup portion 44 formed integrally thereon, and the orbiting cylindrical bearing 42 is disposed within the recessed cup portion 44. The orbiting scroll element 36 also has a central axis 46 and is provided with a hub portion 48 which projects along this central axis 46 into the orbiting cylindrical bearing 42 to thereby rotationally engage the orbiting cylindrical bearing 42. The orbiting cylindrical bearing 42 is positioned such that it is radially offset from the central axis of rotation of the crankshaft by a distance r, with the result that the orbiting cylindrical bearing 42, the hub portion 48 and the orbiting scroll element 36 itself are all driven by the crankshaft 14 in an orbital motion having a radius of orbit equal to r about the central axis 40 of the crankshaft 14.

In order to provide lubrication access to the orbiting cylindrical bearing 42, the crankshaft 14 is provided with a lubricating channel 50 which extends from its second and opposite distal end to a point adjacent the orbiting cylindrical bearing 42. Preferably, as shown, the lubricating channel 50 extends along the central axis 40 of the crankshaft member 14 to the recessed cup portion 44. Provision of the lubricating channel 50 allows the orbiting cylindrical bearing 42 to be lubricated from a readily accessible single vantage point, namely, the second distal end of the crankshaft 14, during maintenance.

The lubricating channel 50 also serves another function during assembly of the scroll compressor 10. More particularly, during assembly, the hub portion 48 of the of the orbiting scroll element 36 enters the orbiting bearing 42. During this step, the lubricating channel 50 serves as a vent, allowing any air that would be otherwise trapped to be vented.

The crankshaft 14 is additionally preferably furnished with a counterweight portion 52 that extends radially from the shaft portion 38 in a direction opposite to the radial offset r of the orbiting cylindrical bearing 42 from the central axis 40 of the crankshaft 14. The crankshaft 14 is rotationally mounted within the bearing cap 12 through the provision of a main crankshaft bearing 54 and a rear crankshaft bearing 56. The main crankshaft bearing 54 rotationally engages the shaft portion 38 at a point that is between the first distal end near the orbiting cylindrical

bearing 42 and the second distal end of the crankshaft 14, while the rear crankshaft bearing 56 rotationally engages the shaft portion 38 at a point that is between the main crankshaft bearing 54 and the second distal end of the crankshaft 14. Both of the main and rear crankshaft bearings 54 and 56 may be, for example, of a caged roller bearing design or a caged ball bearing design. The orbiting cylindrical bearing 42 may be only of a caged roller bearing design.

The main crankshaft bearing 54 is preferably positioned within the bearing cap 12 by a main bearing sleeve 58 having a radially inwardly extending lip 60. A rear bearing sleeve 62 similarly serves to position the rear crankshaft bearing 56 within the bearing cap 12. As seen most clearly in Figs. 6 and 7, a crankshaft locknut member 63 urges a crankshaft lockwasher member 64 into contact with a rear surface of the crankshaft rear bearing 56. The rear bearing sleeve 62 is provided with an inwardly extending ledge 65. A snap ring 67 (shown most clearly in Figs. 4 and 7) snaps into an groove encircling the exterior face of the rear crankshaft bearing 56. The snap ring 67 limits axial movement of the crankshaft 14 in an upward direction (as seen in Fig. 4), thereby locking the crankshaft axially within the bearing cap 12.

As shown in Figs. 3 and 7, the recessed cup portion 44 is provided with an annular ledge 66 spaced away from the bottom of the recessed cup portion 44. The orbiting cylindrical bearing 42

rests on this annular ledge 66 to thus create a lubrication reservoir 68 beneath the orbiting cylindrical bearing 42, the lubrication reservoir 68 being connected to the lubrication channel 50. An orbiting seal 43 overlays the orbiting cylindrical bearing 42 within the recessed cup portion 44.

The orbiting scroll element 36 includes an orbiting base member 70 and an orbiting spiral flange 72 projecting outward therefrom. In order to provide the stationary scroll element 37 referred to above, the stationary scroll 16 is in turn provided with a preferably integrally formed stationary spiral flange 74 which projects outward from the stationary scroll 16 and has a common central axis 40 with the crankshaft 14. As seen most clearly in Figs. 3 and 5, the stationary and orbiting spiral flanges 74 and 72, respectively, are intermeshed and nested with one another. For those not familiar with the manner in which compression is achieved in a scroll-type compressor, the compression mechanics may be difficult to visualize. However, for those of ordinary skill in the scroll-type compressor arts, the compression mechanics are well understood. In brief, the stationary scroll flange 74, being affixed to or an integrally formed portion of the stationary scroll 16, is maintained stationary. The orbiting scroll flange 72 executes an orbit of radius r with respect to the stationary scroll flange 74 and, during such orbiting motion, is maintained substantially non-rotational with respect to the stationary scroll flange 74. In

other words, one may picture the stationary scroll flange 74 as having a stationary central axis z(stationary) 40, as well as remaining orthogonal coordinates x(stationary) and y(stationary) lying within the plane of the stationary spiral flange 74. One may also picture the orbiting spiral flange 72 as having an orbiting central axis z(orbiting) 46, as well as remaining orthogonal coordinates x(orbiting) and y(orbiting) lying within the plane of the orbiting spiral flange 72. In such case the orbiting motion which causes compression can be best described as an orbiting of the z(orbiting) central axis 46 about the z(stationary) central axis 40, while the remaining x and y axes of the stationary and orbiting spiral flanges remain in a parallel relationship to one another. In other words, the orbiting motion is accomplished with substantially no relative rotational motion occurring between the orbiting spiral flange 72 and the stationary spiral flange 74.

During such described motion, a compression pocket will be formed during each revolution of the orbiting spiral flange 72. The compression pocket so formed will spiral toward the central area of the intermeshed stationary and orbiting spiral flanges 74 and 72, respectively, advancing and undergoing a compression step during each orbit. The number of revolutions required for a compression pocket so formed to reach a compressed air output 76 (which is located generally in the vicinity of the stationary central axis 40) depends on how many revolutions each of the stationary and orbiting spiral flanges 74 and 72, respectively, are

provided with. In the present embodiment, each of the stationary and orbiting spiral flanges 74 and 72, respectively, is provided with somewhat over three revolutions. Preferably, each of the stationary and orbiting spiral flanges 74 and 72, respectively, extends over an arc of about 1350°, i.e., about 3¾ evolutions.

Referring now primarily to Fig. 5, the orbiting spiral flange 72 has a radially outward terminus portion 78. As the radially outward terminus 78 portion of the orbiting spiral flange 72 separates from the corresponding portion of the stationary spiral flange 74 during each non-rotational orbit, a progressively wider gap is formed into which low pressure air is introduced from a generally peripherally located suction region 80. As the orbiting spiral flange non-rotationally orbits further, this gap is eventually closed by the contact of the terminus portion 78 with the corresponding portion of the stationary spiral flange 74. The described action forms a compression pocket which spirals inward toward the centrally located compressed air output 76 during successive orbits of the orbiting spiral flange 72. Two successive compression pockets are generally designated as 82 and 84 in Fig. 5, with the more radially inward compression pocket 84 being more highly compressed than the more radially outward compression pocket 82.

In order to prevent any relative rotational movement between the stationary and orbiting spiral flanges 74 and 72 while simultaneously permitting the orbiting of the scroll element 72

through the orbit of radius r under the influence of the orbital drive mechanism described above, the scroll compressor 10 is additionally provided with an anti-rotation device 90 most clearly seen in Figs. 3, 8 and 9, to which we now turn.

The bearing cap 12 is provided with a bearing face portion 86 (seen in Figs. 2,3,4 and 9) which is formed as an semi-annular ledge projecting radially inward from the interior surface of the bearing cap 12. The bearing face portion 86 is provided with a cutout 88 (seen in Fig. 2) in order to provide clearance for the counterweight portion 52 of the crankshaft 14 during assembly/disassembly. Three anti-rotation assembly assemblies 90 are arranged equidistant from and preferably equally angularly spaced around the common central axis 40 of the stationary scroll element 37 and the crankshaft 14. Thus, the three anti-rotation assembly assemblies 90 are preferably spaced at angular intervals of 120°. In the presently preferred embodiment, each of the anti-rotation assembly assemblies 90 is radially spaced outward from the common central axis 40 of the crankshaft 14 and the stationary scroll element 37 at a distance R which is preferably substantially equal to about 5 inches.

Each anti-rotation assembly 90 includes a first rotational bearing 92 which is mounted fixedly and stationary with respect to the stationary scroll element 37, preferably in a the bearing face portion 86 (as shown in Figs. 3 and 9) and a second rotational bearing 94 which is mounted fixedly on the orbiting scroll

element 36. Preferably, each first rotational bearing 92 is disposed in a first cavity 96 provided in the bearing face portion 86, while each second rotational bearing 94 resides in a corresponding second cavity 98 provided in the orbiting scroll element 36. Each anti-rotation assembly 90 further includes an offset crank member 100 having a first shaft portion 102 which engages the first rotational bearing 92 and a second conically tapered shaft portion 104 which engages a similarly conically tapered cavity 110 provided in a bushing member 106 which rotationally engages the second rotational bearing 94. The first and second shaft portions 102 and 104, respectively, are aligned substantially in parallel to one another and are separated by a radially offset distance r which is substantially equal to the radial offset r between the central axis 46 of the orbiting scroll element 36 and the common central axis 40 of the stationary scroll element 36 and the crankshaft 14, the distance r also being the radius of orbit of the orbiting scroll element 36.

The present inventors have discovered that a particularly effective method for providing the engagement between the second shaft portion 104 of the offset crank member 100 and the second rotational bearing 94 is through the provision of the bushing member 106 which is itself non-rotationally engaged with the second shaft portion 104 but is rotationally engaged with the second rotational bearing 94. To this end, the second shaft portion 104 is provided with a conically tapered portion 108 which non-

rotationally connects via a friction push fit with the similarly tapered cavity 110 provided in the bushing member 106. The non-tapered exterior periphery of the bushing 106 then rotationally mates with the second rotational bearing 94.

During operation of the scroll compressor 10, the pressure that is built up (e.g., in the spiraling compression pockets 82 and 84) exerts an axial force, that is a force acting parallel to the central axes 40 and 46 which tends to separate the stationary and orbiting spiral elements 37 and 36, respectively, from one another. From the viewpoint of merely providing for a rotational motion between the first shaft portion 102 and the first rotational bearing 92 and also between the bushing member 106 and the second rotational bearing 94, it is sufficient to furnish the first and second rotational bearings 92 and 94, respectively, in the form of conventional ball bearing assemblies or conventional roller bearing assemblies. Back pressure could then, for example, be utilized to balance or compensate for the above-noted axial forces which tend to separate the stationary and orbiting spiral elements 37 and 36, respectively. However, the present inventors have discovered that by utilizing a particular type of bearing for the first and second rotational bearings 92 and 94, respectively, the above-noted separating axial forces may be neutralized directly, thus eliminating the requirement of utilizing back pressure. In this regard, the rotational bearing components 92 and 94, respectively, are each preferably furnished in the form of angular contact

bearing assemblies 112, an example of which is shown most particularly in Fig. 10. Fig. 10 shows the second rotational bearing 94 being provided as an angular contact bearing assembly 112 and the positioning of the second rotational bearing 94 relative to the central axis 40 and 46 during one extreme of the rotational orbit. It will be understood that the first rotational bearing 92 may be likewise provided in the form of a similar angular contact bearing assembly 112. Preferably, both of the first and second rotational bearing components 92 and 94, respectively, are provided in the form of an angular contact bearing assembly 112.

As seen in Fig. 10, the angular contact bearing assemblies 112 which are preferably employed for the first and second rotational bearing components 92 and 94, respectively, include at least one bearing surface 114 and/or 116 which projects a non-zero component parallel to the direction of the central axis 40 of the stationary scroll element 37 and parallel to the direction of the central axis 46 of the orbiting scroll element 36, both central axes 40 and 46 being parallel to one another. Due to the fact that the bearing surfaces 114 and/or 116 have a non-zero component projecting in a direction parallel to the central axes 40 and 46, the angular contact bearing assemblies 112 are able to resist the above-noted axial forces generated during compression which tend to exert a separating force between the stationary and orbiting scroll elements 37 and 36, respectively. Preferably, the angular contact

bearing assemblies 112 employed are angular contact ball bearing assemblies and are of a single row configuration. Such angular contact ball bearing assemblies are available commercially and are well known to those of ordinary skill in the mechanical arts. Such angular contact ball bearing assemblies typically include two such bearing surfaces 114 and 116 which are angled so as to resist angular forces (i.e., having non-zero components in two orthogonal directions) applied thereto.

While it is possible to provide the rotational bearing components 92 and 94 in the form of sealed pre-lubricated bearing assemblies, in its presently preferred embodiment, the scroll compressor 10 includes a lubrication apparatus 118 for allowing the rotational bearing components 92 and 94 to be periodically lubricated. Provision of the lubrication apparatus 118 allows for a longer life of the first and second rotational bearing components 92 and 94, respectively. Utilizing sealed pre-lubricated bearings could necessitate a costly disassembly procedure for replacement of the bearings near the end of their rated life. The provision of the lubrication apparatus 118 is made possible by a further unique construction of the anti-rotation assembly assemblies 90, wherein each of the first rotational bearing components 92 is fixedly mounted within the bearing cap 12 and wherein a lubrication channel portion is provided which interconnects the respective first and second rotational bearing components 92 and 94, respectively.

Referring most particularly to Fig. 3, a lubrication port 120 is disposed on the exterior surface of the bearing cap 12 adjacent each of the anti-rotation assembly assemblies 90. A lubrication channel 122 extends from each of the lubrication ports 120 to at least a point adjacent the first rotational bearing 92 of the associated anti-rotation assembly 90. As is shown most particularly in Fig. 9, a channel portion 124 passing through the offset crank member 100 extends the lubrication channel 122 so that it ultimately extends to another point adjacent the second rotational bearing 94. A lubricating agent (e.g., grease) introduced into the lubrication channel 122 through the lubrication port 120 lubricates the first rotational bearing 92 via the first cavity 96 provided in the bearing face portion 86 in which the first rotational bearing 92 is mounted. Additionally, the lubricating agent is conducted through the channel portion 124 in the offset crank member 100 to the second cavity second cavity 98 provided in the orbiting scroll element 36, thereby lubricating the second rotational bearing 94.

As noted above, the orbiting spiral flange 72 and the stationary spiral flange 74 are nested and intermeshed with one another to form the spiraling compression pockets illustrated by the compression pockets 82 and 84 shown in Fig. 5. In order to provide a substantially airtight seal for these spiraling compression pockets (e.g., 82 and 84) the present scroll compressor 10 employs a unique "tipseal" assembly 126, generally

illustrated in Fig. 3 and most particularly shown in Figs. 11 and 12, to which we now turn.

The orbiting spiral flange 72 projecting outward from the orbiting base member 70 of the orbiting scroll element 36 terminates in an end surface 128 which is positioned immediately adjacent to and opposes the stationary scroll 16. Similarly, the stationary spiral flange 74 projecting outward from the stationary scroll 16 terminates in an end surface 130 which is positioned immediately adjacent to and opposes the orbiting base member 70. Each of the end surfaces 128 and 130 are provided with an inwardly extending groove 132 and 134, respectively. Preferably, each of the grooves 132 and 134 preferably extends substantially over the entire extent of the associated end surface 128 and 130, respectively. A compressible element 136 is disposed within the groove 132, and another compressible element 138 is similarly disposed within groove 134. A first tipseal element 140 overlays compressible element 136, while a second tipseal element 142 overlays compressible element 138.

The depths of the grooves 132 and 134, the heights of the compressible elements 136 and 138 and the heights of the tipseal elements 140 and 142 are all selectively chosen such that, with these components are in their assembled configuration and with the compressible elements 136 and 138 in a substantially uncompressed state, each respective tipseal element 140 and 142 extends beyond the respective end surface 128 and 130 by a measurement ranging

between about 0.018 inch and 0.022 inch. Stated another way, the combined height of the compressible element 136 and the tipseal element 140 exceeds the depth of the groove 132 by about 0.018 inch to about 0.022 inch when the compressible element 136 is in a substantially compressed state. Similarly, the combined height of the compressible element 138 and the tipseal element 142 exceeds the depth of the groove 134 by about 0.018 inch to about 0.022 inch when the compressible element 138 is in a substantially compressed state.

When the scroll compressor is in its assembled state (for example, as shown in Fig. 3), the compressible elements 136 and 138 will become somewhat compressed such that they exert biasing forces on the respective tipseal elements 140 and 142 urging them into contact with the respective opposing surfaces of stationary scroll 16 and orbiting base member 70 to thereby form substantially airtight seals for the spiraling compression pockets (e.g., 82 and 84) formed between the nested and intermeshed stationary scroll element 37 and orbiting scroll element 36.

The present inventors have achieved good performance by providing the compressible elements 136 and 138 in the form of an elongated O-ring made of an elastomeric material, most preferably a silicone rubber material, and even more preferably a high temperature resistant O-ring material. Similarly, good performance has been achieved by furnishing the tipseal elements 140 and 142 in

the form of a non-metallic substance, preferably a PTFE based product, and most preferably a fluorosint material.

The air inlet valve assembly 34 discussed briefly above in connection with Figs. 1 and 2 is more particularly illustrated in Figs. 4 and 13-15, to which we now turn.

The air inlet valve assembly 34 is provided in order to conduct ambient air to the suction region 80 (shown in Figs. 5 and 13) which is located generally peripherally around the orbiting and stationary spiral flanges 72 and 74, respectively, and to also prevent any backward rotation of the orbiting scroll element 36 upon shut down of the power source which drives the crankshaft 14. To this end, an air inlet channel 144 connects the ambient environment located outside of the bearing cap 12 to the suction region 80 located within the bearing cap 12. As shown in Fig. 4, the air inlet channel 144 preferably passes through the stationary scroll 16. In the configuration of Fig. 4, a portion of the air inlet channel 144 is formed by a air inlet port 146 formed in the stationary scroll 16. The air inlet valve assembly 34 includes a valve piston 148 which is positioned within the air inlet channel 144. The valve piston 148 is moveable between a first position (shown in Figs. 4, 13 and 14) wherein the valve piston 148 substantially blocks any flow through the air inlet channel 144 and a second position wherein the valve piston 148 substantially unblocks flow through the air inlet channel 144.

The valve piston 148 is biased toward the first blocking position by a biasing member 150. More particularly, the air inlet valve assembly 34 further includes a valve seat 152 which is mounted stationary with respect to the stationary scroll 16, and the biasing member 150 urges the valve piston 148 into contact with the valve seat 152 thereby preventing flow past the valve piston 148 and substantially blocking the air intake channel 144. The valve seat 152 is disposed on the opposite side of the valve piston 148 from the suction region 80, and therefore, the force exerted by the biasing member 150 is in a direction substantially away from the suction region 80.

In the embodiment shown in Figs. 2, 4 and 13, a valve housing 154 is provided which connects to the stationary scroll 16 via bolts 156. The valve piston 148 is disposed within a valve cavity 158 that is formed within the valve housing 154, and the valve seat 152 is provided as a surface formed within the valve cavity 158 enclosed by the valve housing 154. A valve stem 160 is connected to and extends from the valve housing 154 in the direction of the suction region 80. The valve piston 148 surrounds the valve stem 160 and is able to reciprocate in a sliding fashion thereon. A first stop surface 162 is formed on the valve piston 148. A second stop surface 164 is formed on the valve stem 160 and is disposed between the first stop surface 162 formed on the valve piston 148 and the suction region 80. The biasing member 150 is preferably provided in the form of a coil spring 166

which encircles the valve stem 160 between the first stop surface 162 and the second stop surface 164. The valve piston 148 is able to slide along the valve stem 160 in the direction of the suction region 80 to admit ambient air to be compressed against the biasing force exerted by the coil spring 166. Movement of the valve piston 148 in the direction of the suction region 80 is limited by contact of the first stop surface 162 provided on the valve piston 148 with the second stop surface 164 formed on the valve stem 160.

In the embodiment of the air inlet valve assembly 34 shown in Figs. 2, 4 and 13, it is possible that vibration characteristics could be introduced by the presence of the biasing element 150 (e.g., the coil spring 166). In such cases, the present inventors have discovered that the biasing element 150 (e.g., coil spring 166) and its associated supporting structures may be eliminated from the design without introducing any serious compromise in function.

Figs. 14 and 15 illustrate an alternative embodiment of the air inlet valve assembly 34 which functions in substantially the same manner as described above but which is provided with a somewhat differently configured air intake valve body 168 having an air intake conduit 170 extending therefrom.

While the present invention has been described by way of a detailed description of a particularly preferred embodiment or embodiments, it will be apparent to those of ordinary skill in the art that various substitutions of equivalents may be affected without departing from the spirit or scope of the invention as set forth in the appended claims.

It is to be understood that, if any prior art publication is referred to herein, the reference does not constitute an admission that the publication forms a part of the common general knowledge in the art, in Australia or any other country.

In the claims which follow and in the preceding description of the invention, except where the context requires otherwise due to express language or necessary implication, the word "comprise" or variations the as "comprises" or "comprising" is used in an inclusive sense, i.e. to specify the presence of the stated features but not to preclude the presence or addition of further features in various embodiments of the invention.

THE CLAIMS DEFINING THE INVENTION ARE AS FOLLOWS:

1. An air inlet valve assembly for a scroll compressor, the scroll compressor comprising a housing; a stationary scroll element mounted within the housing stationary with respect to the housing, the stationary scroll element including a stationary spiral flange; an orbiting scroll element disposed within the housing, each of the stationary and orbiting scroll elements having a central axis, the orbiting scroll element including an orbiting spiral flange, the stationary and orbiting spiral flanges being intermeshed and nested with one another to define a compression pocket therebetween; an orbital drive mechanism for driving the central axis of the orbiting scroll element in an orbit about the central axis of the stationary scroll element while maintaining the orbiting scroll element non-rotational with respect to the stationary scroll element; and an air inlet channel connecting to the compression pocket for supplying air to be compressed to the compression pocket, wherein the air inlet valve assembly comprises:

a valve housing connected to and disposed external to the stationary scroll element;

the valve housing being readily attachable to and detachable from the stationary scroll element;

the valve housing enclosing a valve cavity, comprising at least a portion of the air inlet channel; and

a valve piston positioned within said valve cavity;

the valve piston having a first position blocking the air inlet channel and a second position unblocking the air inlet channel.

2. An air inlet valve assembly for a scroll compressor according to claim 1, wherein the intermeshed and nested stationary and orbiting scroll elements define a suction region and a pressurized discharge region, the pressurized

discharge region, during operation of the scroll compressor, containing a higher pressure gas than the suction region and wherein the air inlet channel connects to the suction region.

3. An air inlet valve assembly for a scroll compressor according to claim 2, wherein the suction region is disposed radially outward of both of the stationary and orbiting scroll elements.

4. An air inlet valve assembly for a scroll compressor according to any one of claims 1 to 3, wherein the spiral flange member projects outward from the stationary scroll element, and wherein the air inlet channel passes through the stationary scroll element.

5. An air inlet valve assembly for a scroll compressor according to any one of claims 1 to 4, said air inlet valve assembly further comprising:

a valve seat, said valve seat being connected stationary with respect to the stationary scroll element;

a first stop surface formed on said valve piston; and

a second stop surface disposed stationary with respect to the stationary scroll element;

said first stop surface formed on said valve piston being disposed between said second stop surface and the compression pocket;

contact between said first and second stop surfaces being effective to limit movement of said valve piston toward the compression pocket.

6. An air inlet valve assembly for a scroll compressor according to claim 5, wherein:

said valve seat comprises a surface of said valve housing disposed within said valve cavity;

and wherein said air inlet valve assembly further

comprises:

a valve stem member connected to said valve housing, said valve stem member being disposed within said valve cavity and said valve stem member extending toward the suction region along the air inlet channel;

said valve piston being slidably mated with said valve stem member for reciprocating movement with respect thereto;

said second stop surface being formed on said valve stem member.

7. An improved air inlet valve assembly when used in a scroll compressor, the scroll compressor comprising a housing; a stationary scroll element disposed within the housing stationary with respect to the housing, the stationary scroll element including a stationary spiral flange; an orbiting scroll element disposed within the housing, each of the stationary and orbiting scroll elements having a central axis, the orbiting scroll element including an orbiting spiral flange, the stationary and orbiting spiral flanges being intermeshed and nested with one another to define a compression pocket therebetween; an orbital drive mechanism for driving the central axis of the orbiting scroll element in an orbit about the central axis of the stationary scroll element while maintaining the orbiting scroll element non-rotational with respect to the stationary scroll element; and an air inlet channel provided through the housing, the air inlet channel connecting to the compression pocket, wherein the improved air inlet valve assembly supplies air to be compressed to the compression pocket, said improved air inlet valve assembly comprising:

a valve housing connected to and disposed external to the stationary scroll element;

said valve housing being readily attachable to and detachable from the stationary scroll element;

said valve housing enclosing a valve cavity, said

valve cavity comprising at least a portion of the air inlet channel; and

a valve piston positioned within said valve cavity;

said valve piston having a first position blocking the air inlet channel and a second position unblocking the air inlet channel.

8. An improved air inlet valve assembly according to claim 7, wherein the intermeshed and nested stationary and orbiting scroll elements define a suction region and a pressurized discharge region, the pressurized discharge region, during operation of the scroll compressor, containing a higher pressure gas than the suction region, and wherein the air inlet channel connects to the suction region.

9. An improved air inlet valve assembly according to claim 8, wherein the suction region is disposed radially outward of both of the stationary and orbiting scroll elements.

10. An improved air inlet valve assembly according to any one of claims 7 to 9, wherein the stationary spiral flange projects outward from the stationary scroll element, and wherein the air inlet channel passes through the stationary scroll element.

11. An improved air inlet valve assembly according to any one of claims 7 to 10, wherein said air inlet valve assembly further comprises:

a valve seat, said valve seat being connected stationary with respect to the stationary scroll element;

a first stop surface formed on said valve piston; and

a second stop surface disposed stationary with respect to the stationary scroll element;

said first stop surface formed on said valve piston

being disposed between said second stop surface and the compression pocket;

contact between said first and second stop surfaces being effective to limit movement of said valve piston toward the compression pocket.

12. A scroll compressor including an air inlet valve assembly for supplying air to be compressed, comprising:

a housing;

a stationary scroll element mounted within said housing stationary with respect to said housing, said stationary scroll element including a stationary spiral flange;

an orbiting scroll element disposed within said housing, said orbiting scroll element including an orbiting spiral flange;

each of said stationary and orbiting scroll elements having a central axis;

said stationary and orbiting spiral flanges being intermeshed and nested with one another to define a compression pocket therebetween;

orbital drive means for driving said central axis of said orbiting scroll element in an orbit about said central axis of said stationary scroll element while maintaining said orbiting scroll element non-rotational with respect to said stationary scroll element; and

an air inlet channel provided through said housing, said air inlet channel connecting to said compression pocket; and

said air inlet valve assembly being for supplying air to be compressed to said compression pocket, said air inlet valve assembly comprising:

a valve housing connected to and disposed external to the stationary scroll element;

said valve housing being readily attachable to and detachable from the stationary scroll element;

said valve housing enclosing a valve cavity, said

valve cavity comprising at least a portion of the air inlet channel; and

a valve piston positioned within said valve cavity, said valve piston having a first position blocking said air inlet channel and a second position unblocking said air inlet channel.

13. A scroll compressor including an air inlet valve assembly for supplying air to be compressed according to claim 12, wherein said intermeshed and nested stationary and orbiting scroll elements define a suction region and a pressurized discharge region, said pressurized discharge region, during operation of said scroll compressor, containing a higher pressure gas than said suction region, and wherein said air inlet channel connects to said suction region.

14. A scroll compressor including an air inlet valve assembly for supplying air to be compressed according to claim 13, wherein said suction region is disposed radially outward of both of said stationary and orbiting scroll elements.

15. A scroll compressor including an air inlet valve assembly for supplying air to be compressed according to any one of claims 12 to 14, wherein said air inlet channel passes through said stationary scroll element.

16. A scroll compressor including an air inlet valve assembly for supplying air to be compressed according to any one of claims 12 to 15, wherein said air inlet valve assembly further comprises:

a valve seat, said valve seat being connected stationary with respect to said stationary scroll element;

a first stop surface formed on said valve piston; and

a second stop surface disposed stationary with

respect to said stationary scroll element;

said first stop surface formed on said valve piston being disposed between said second stop surface and said compression pocket;

contact between said first and second stop surfaces being effective to limit movement of said valve piston toward the compression pocket.

17. A scroll compressor including an air inlet valve assembly for supplying air to be compressed according to claim 16, wherein:

said valve seat comprises a surface of said valve housing disposed within said valve cavity;

and wherein said air inlet valve assembly further comprises:

a valve stem member connected to said valve housing, said valve stem member being disposed within said valve cavity and said valve stem member extending toward said suction region along said air inlet channel;

said valve piston being slidably mated with said valve stem member for reciprocating movement with respect thereto; said second stop surface being formed on said valve stem member.

18. An air inlet valve assembly for a scroll compressor substantially as herein described with reference to the accompanying drawings.

19. An improved air inlet valve assembly substantially as herein described with reference to the accompanying drawings.

20. A scroll compressor including an air inlet valve assembly substantially as herein described with reference to the accompanying drawings.

Dated this 31st day of MAY 2004
WESTINGHOUSE AIR BRAKE TECHNOLOGIES CORPORATION
By their Patent Attorneys
GRIFFITH HACK
Fellows Institute of Patent and
Trade Mark Attorneys of Australia

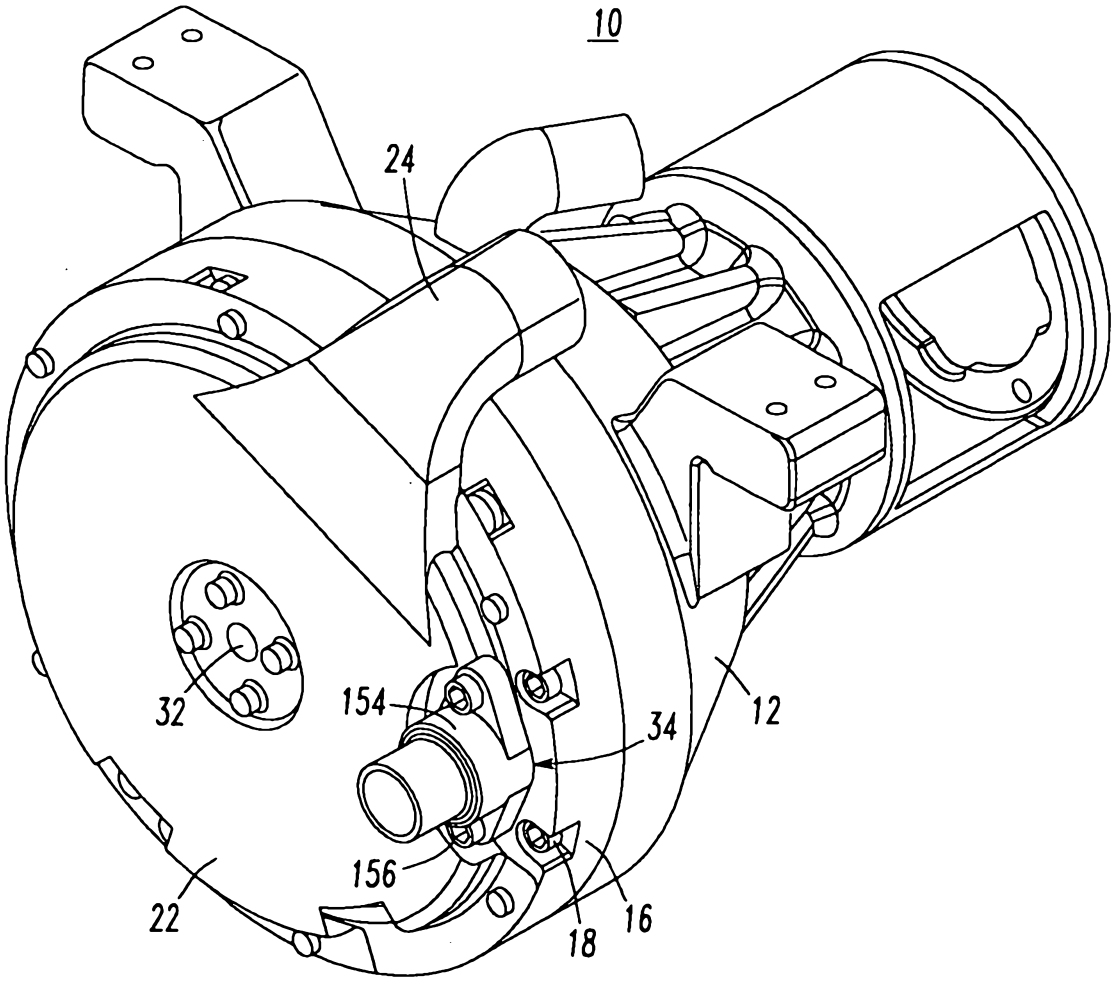

FIG. 1

010604 31332

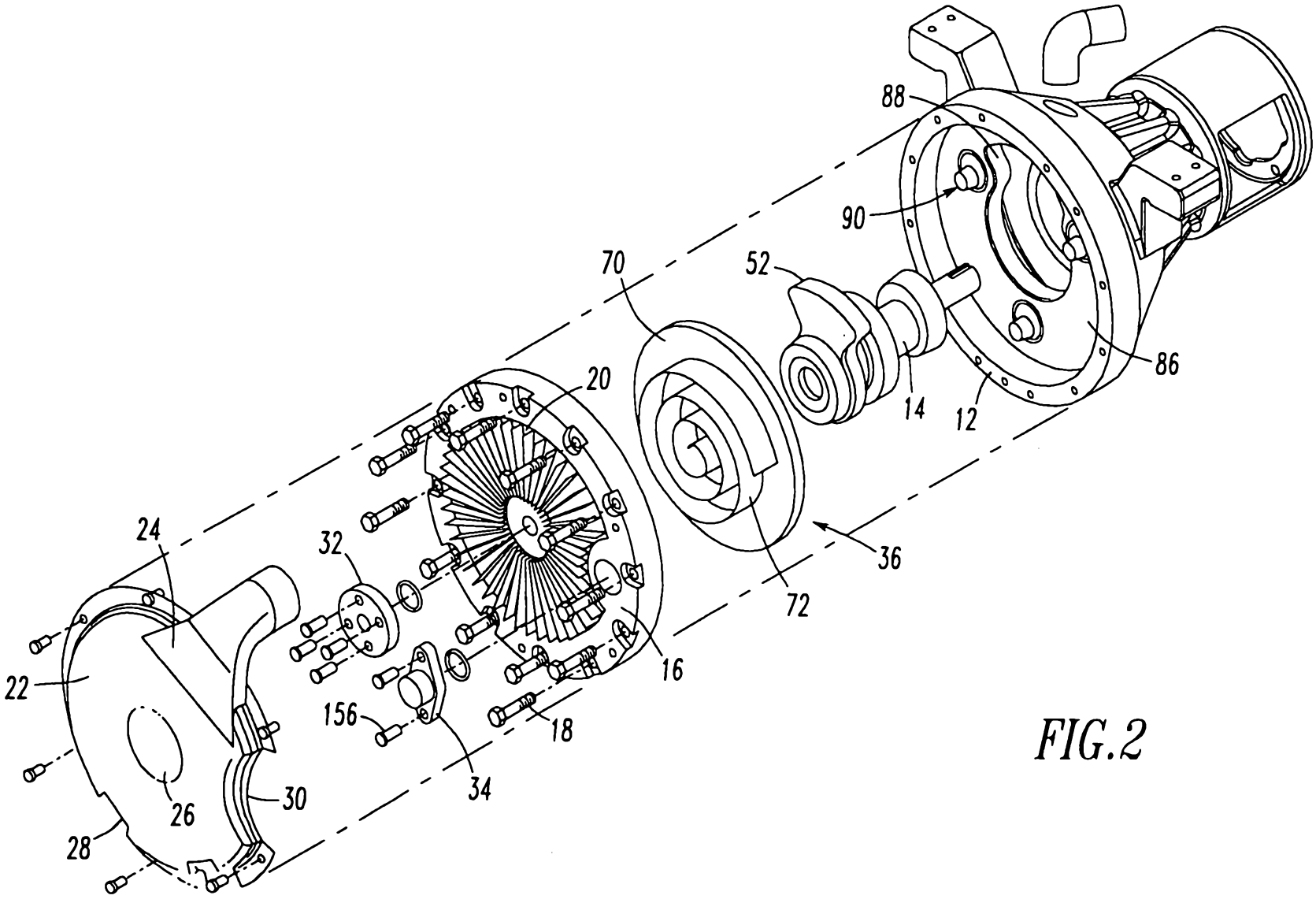

FIG.2

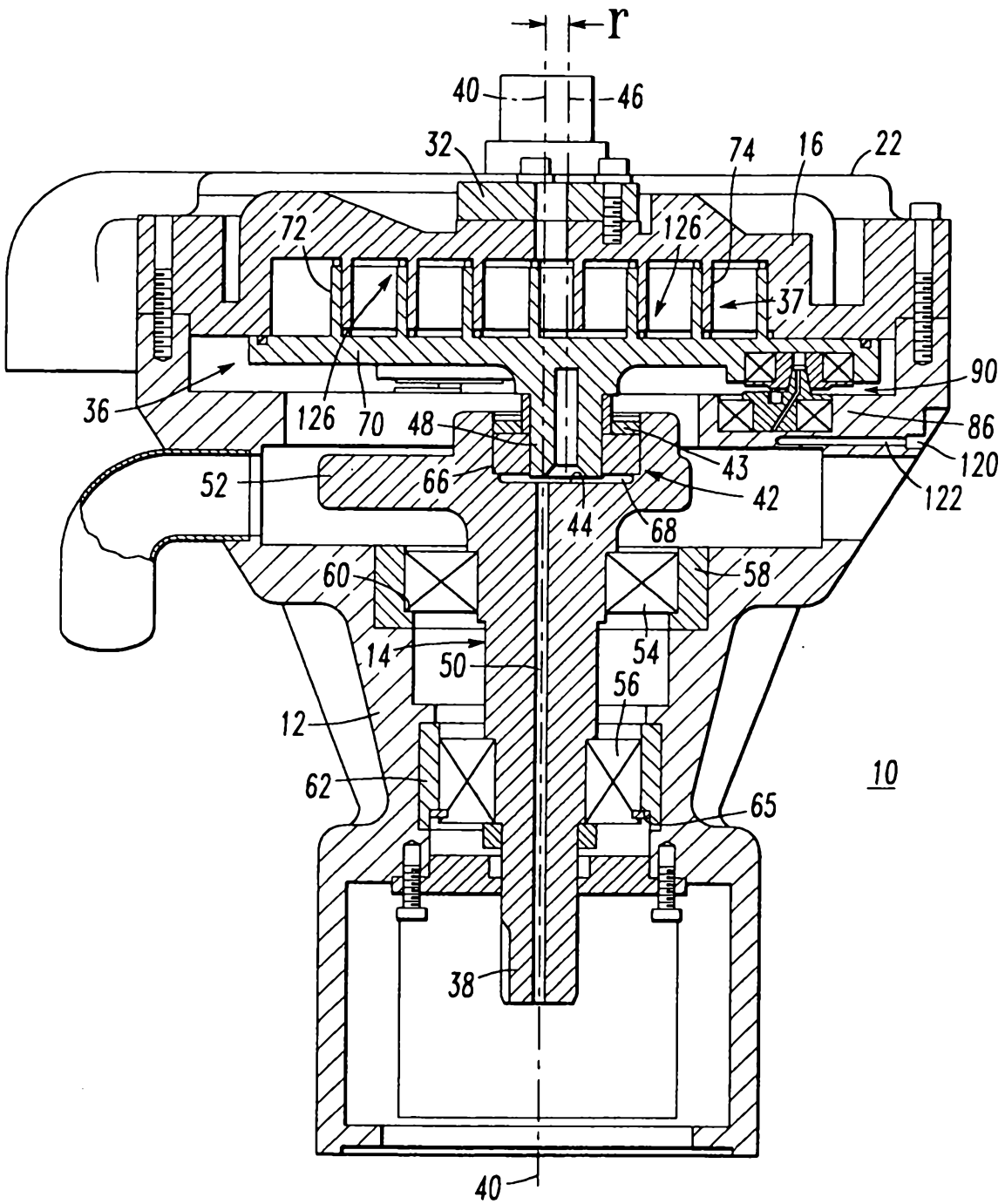
r
40
46
32
74
16
22
72
126
37
90
36
126
70
48
86
120
43
52
66
42
122
44
68
60
58
14
50
54
56
12
10
62
65
38
40

FIG.3

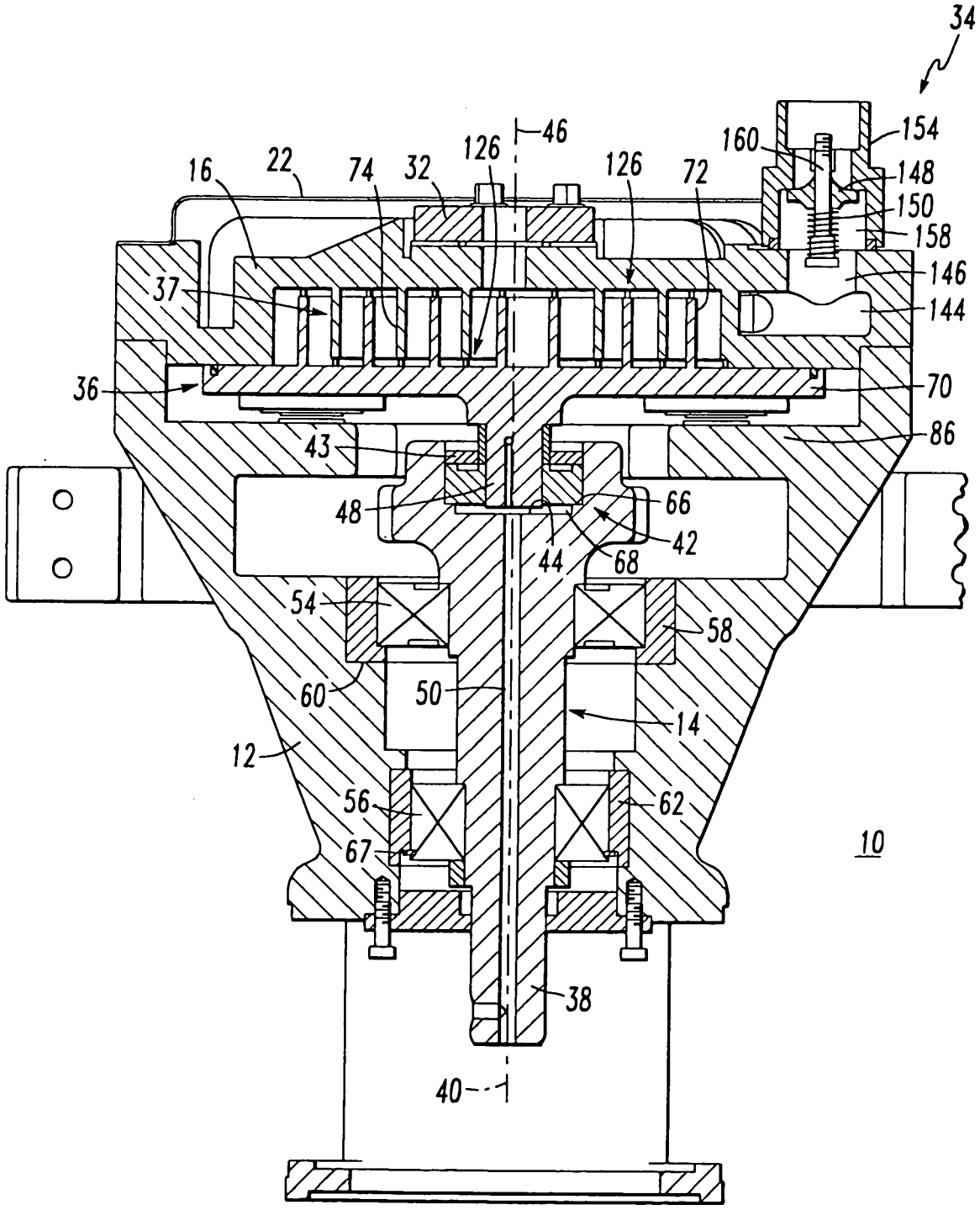
34
46
160
154
16
22
74
32
126
126
72
148
150
158
146
37
144
36
70
43
86
48
66
42
44
68
54
58
60
50
14
12
56
62
67
10
38
40

FIG. 4

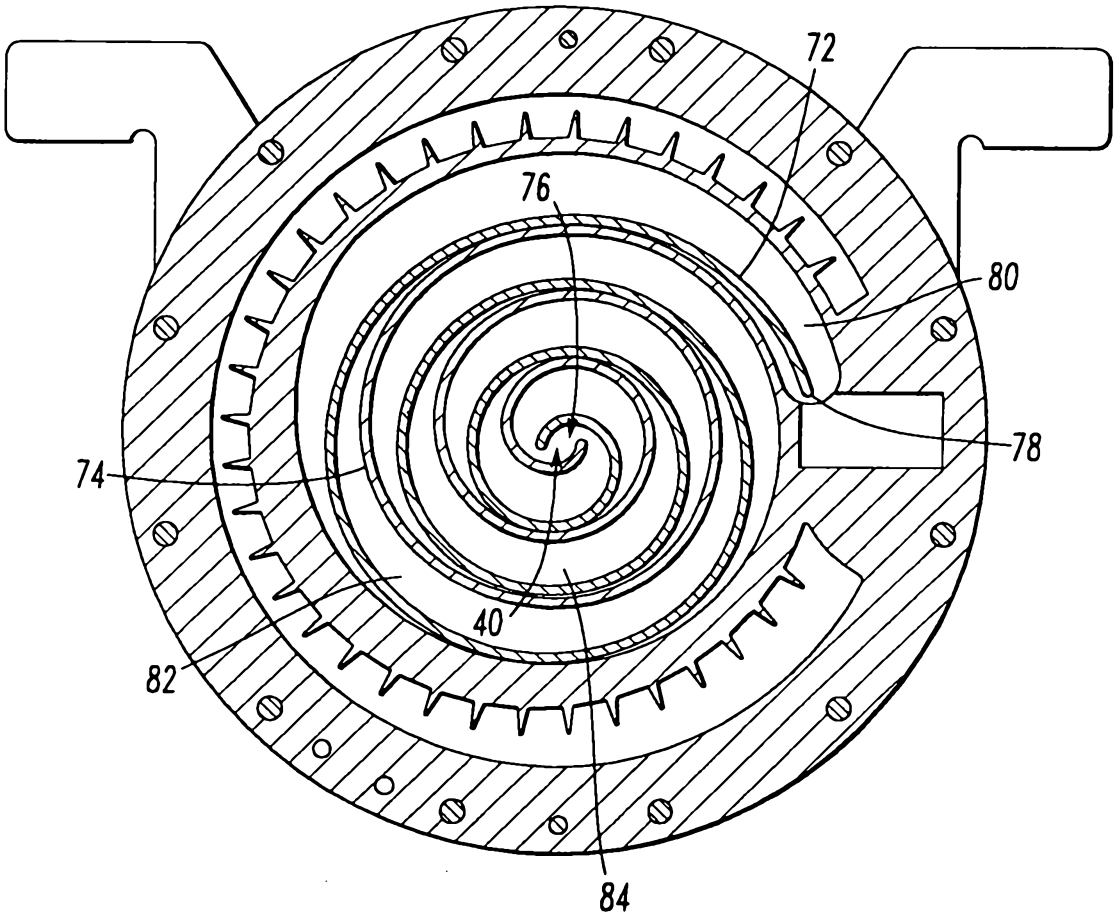

FIG.5

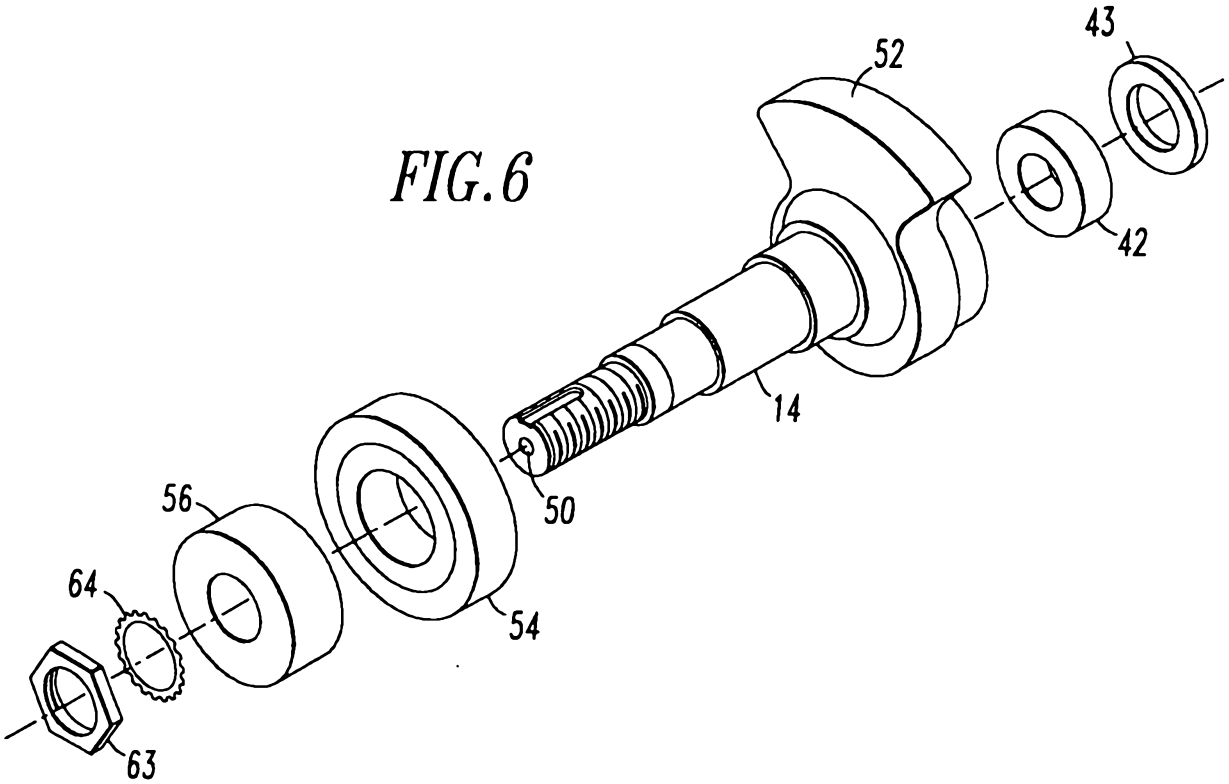

FIG. 6

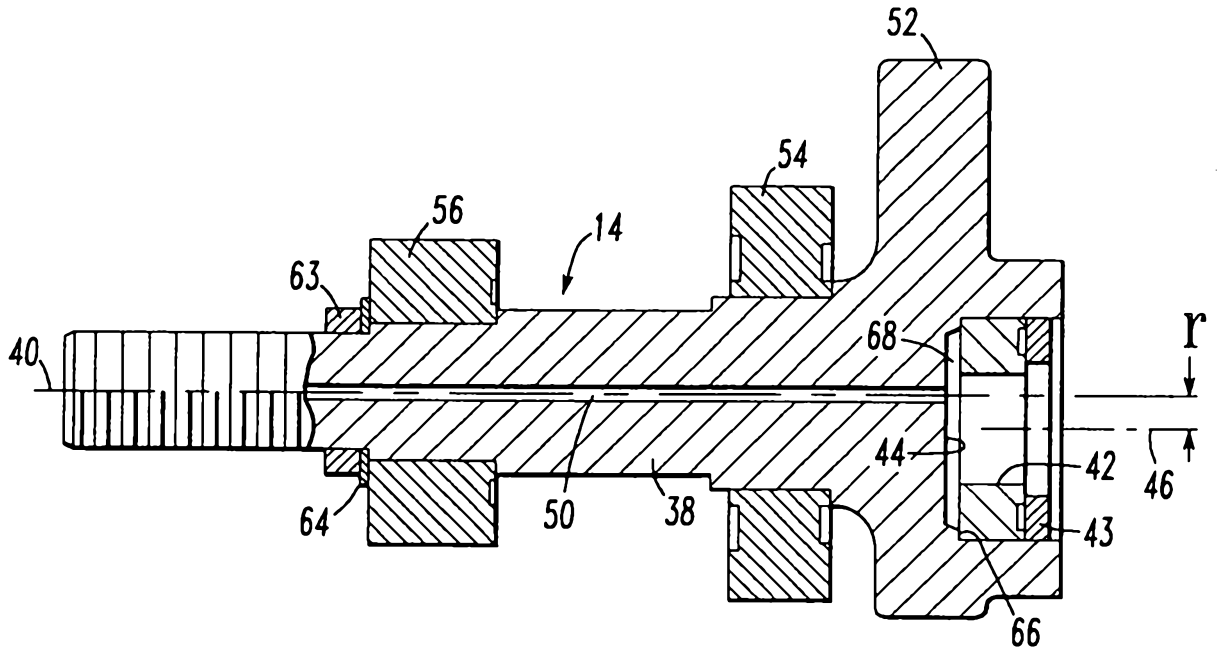

FIG. 7

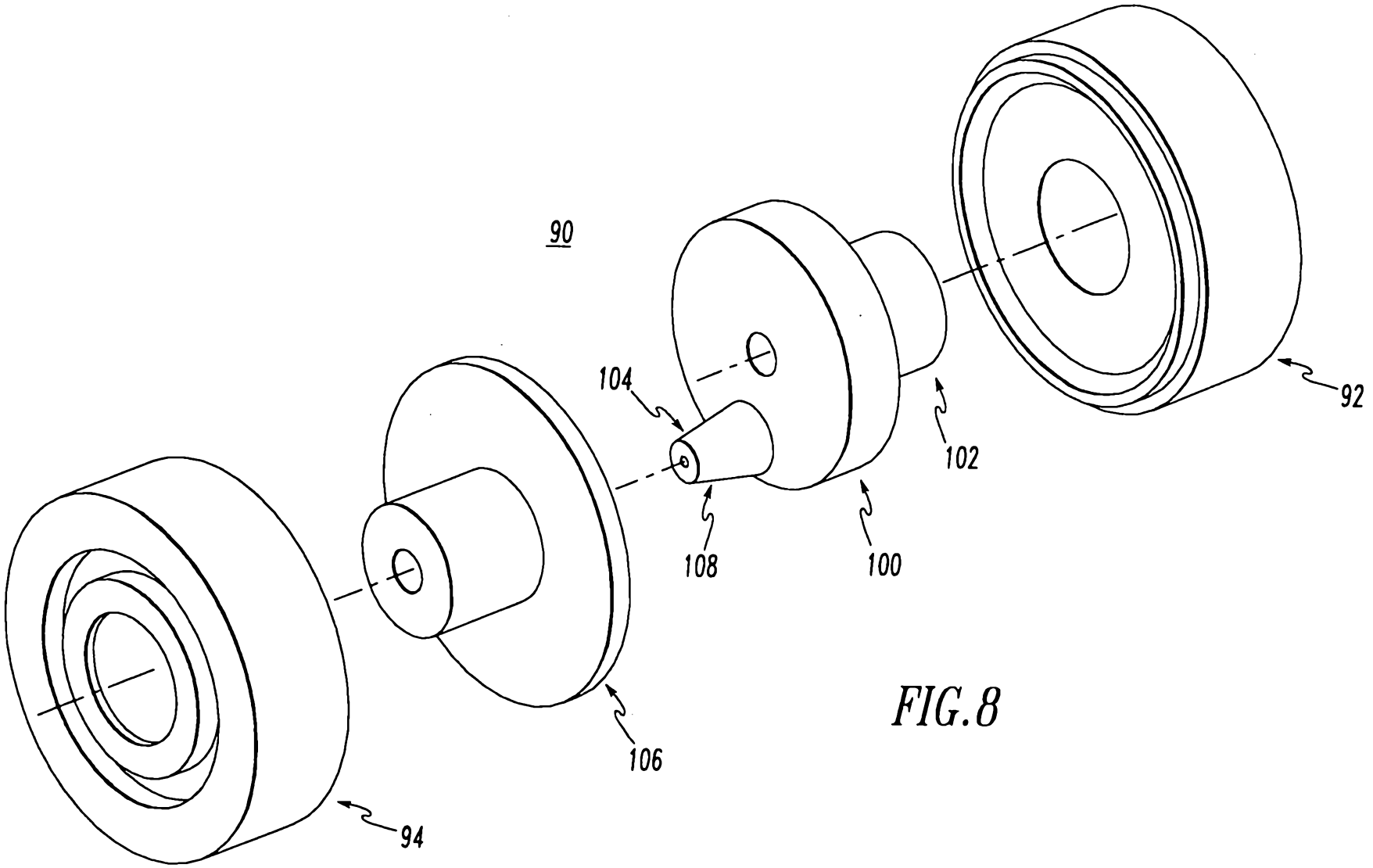

FIG.8

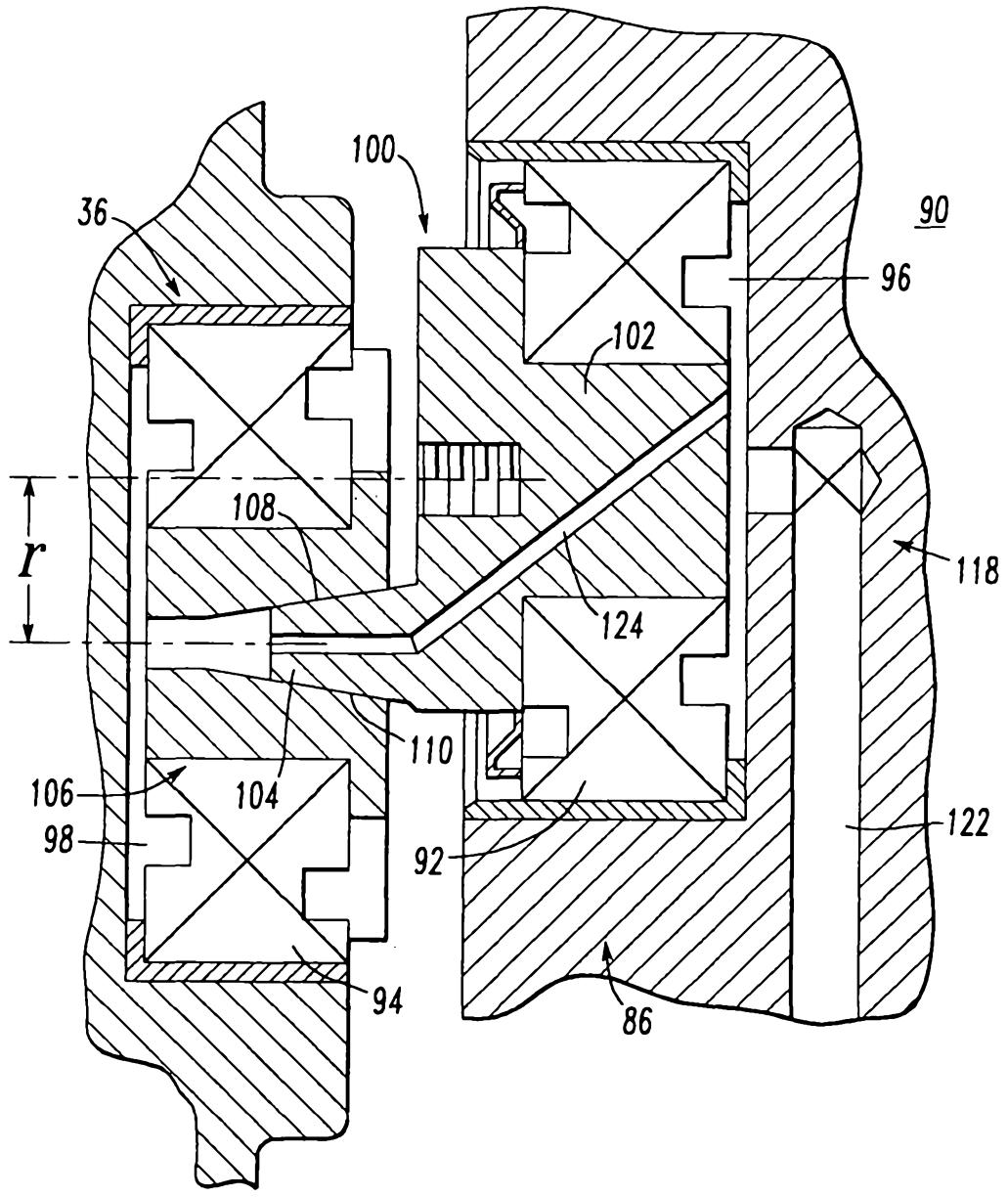

FIG.9

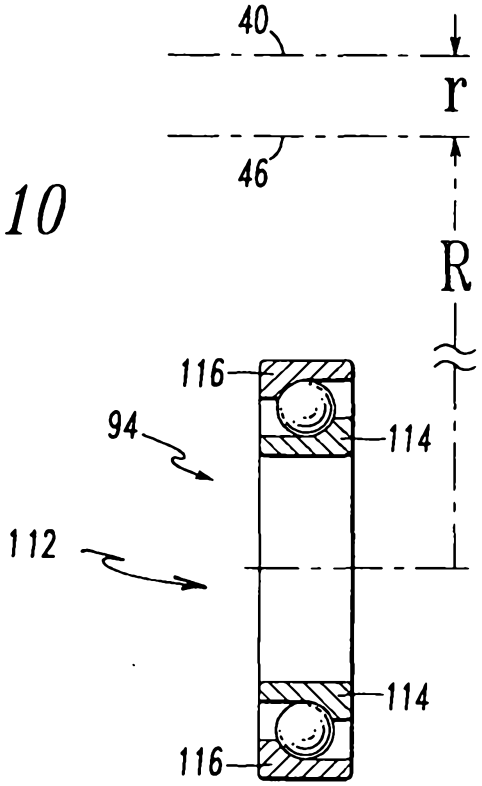
40
r
46
R
116
94
114
112
114
116

FIG. 10

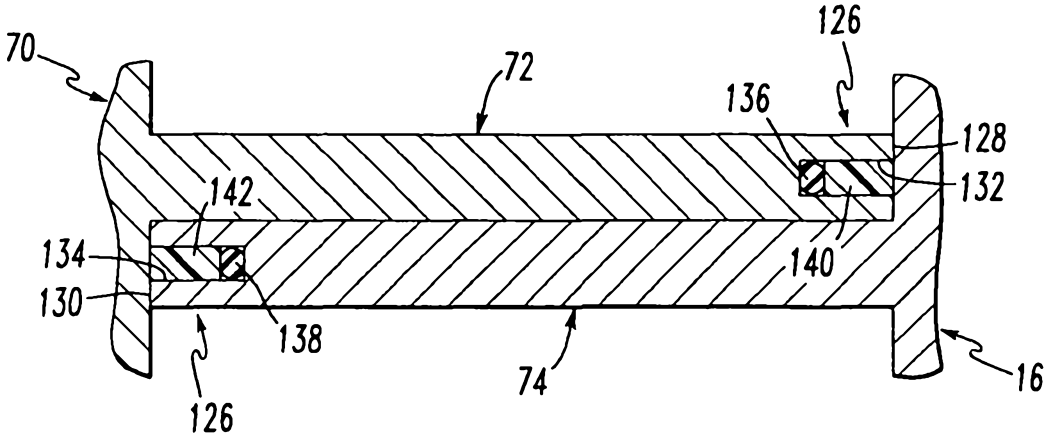
70
72
126
136
128
132
142
134
130
138
140
74
16
126

FIG. 11

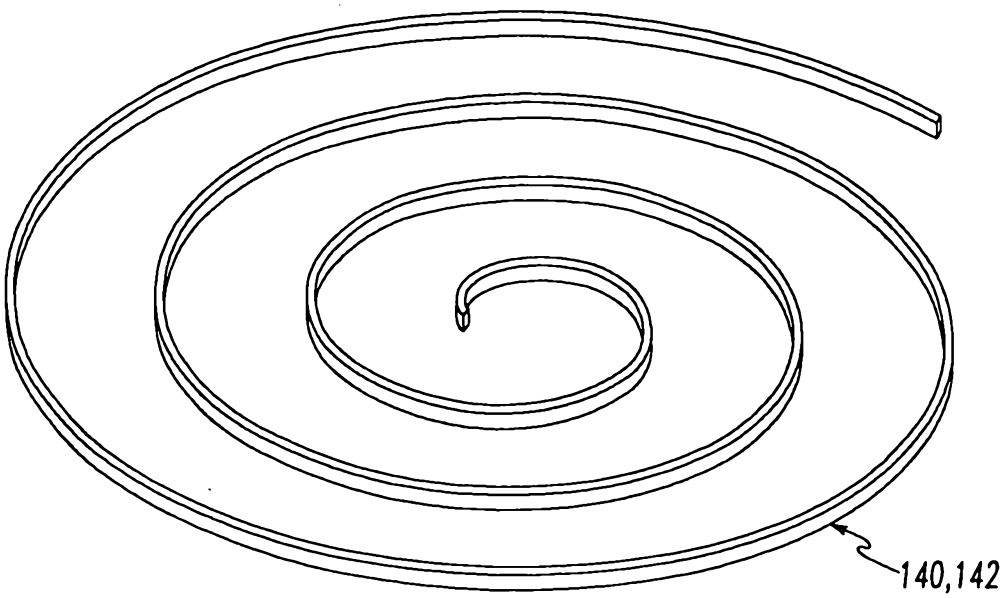
140,142

FIG. 12

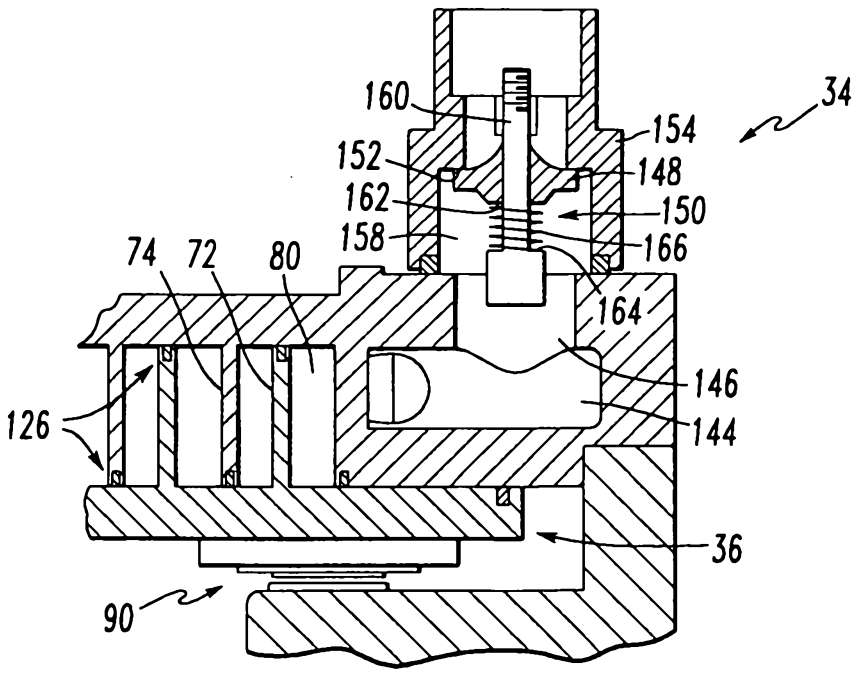
160
34
154
152
148
162
150
158
166
74
72
80
164
146
126
144
36
90

FIG. 13

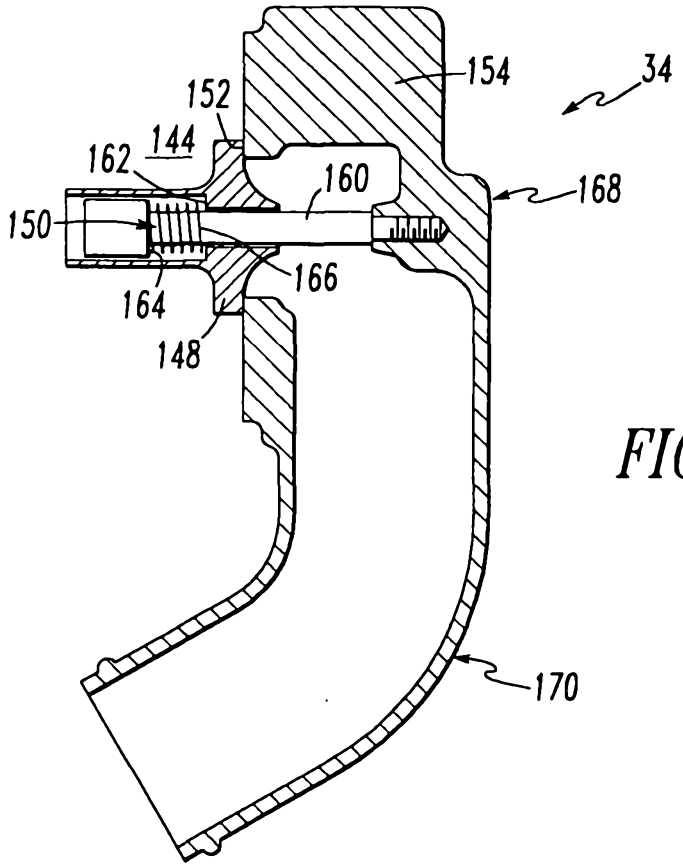
154
34
152
144
162
160
168
150
166
164
148
170

FIG. 14

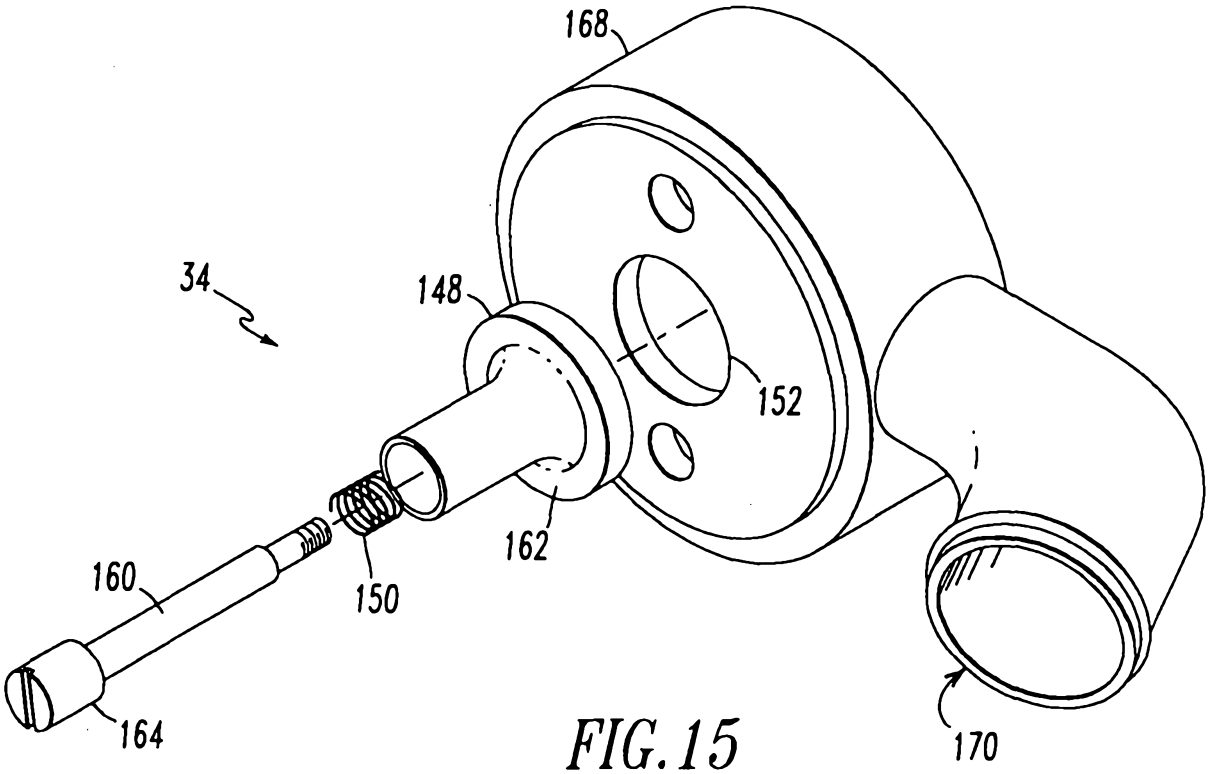
168
34
148
152
162
160
150
164
170

FIG. 15