Nov. 12, 1935. K. WANDEL 2,020,668

TISSUE HANDKERCHIEF AND METHOD

Filed March 22, 1935 2 Sheets-Sheet 1

Fig. 1

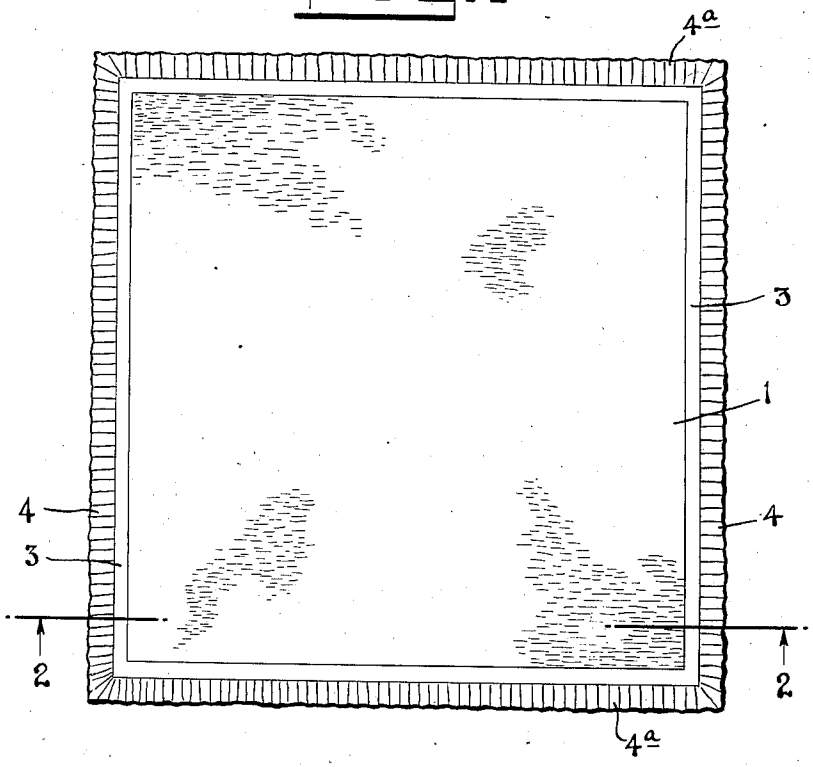

Fig. 2

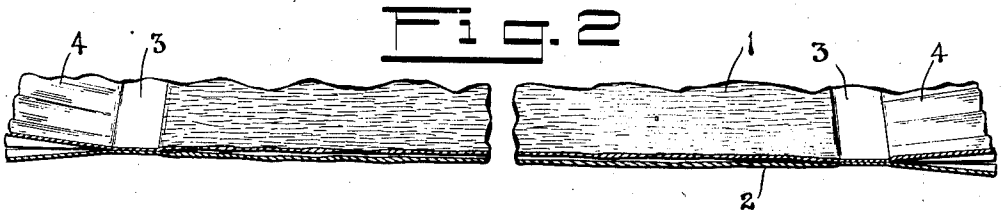

Fig. 3

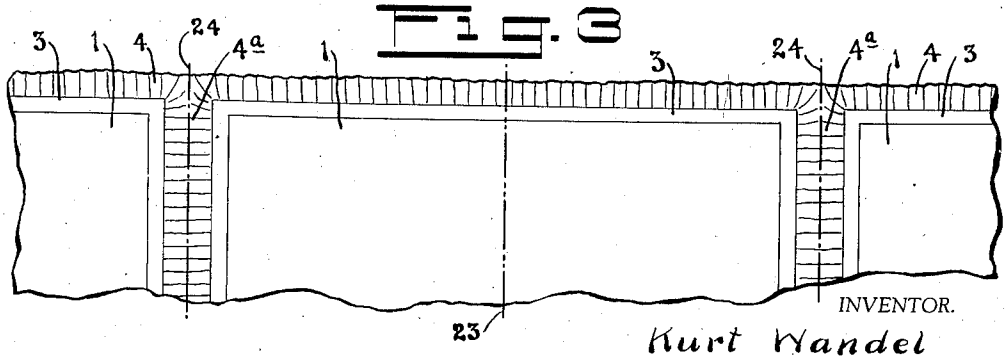

INVENTOR.

Kurt Wandel

BY

his ATTORNEY.

Nov. 12, 1935. K. WANDEL 2,020,668

TISSUE HANDKERCHIEF AND METHOD

Filed March 22, 1935 2 Sheets-Sheet 2

Fig. 4

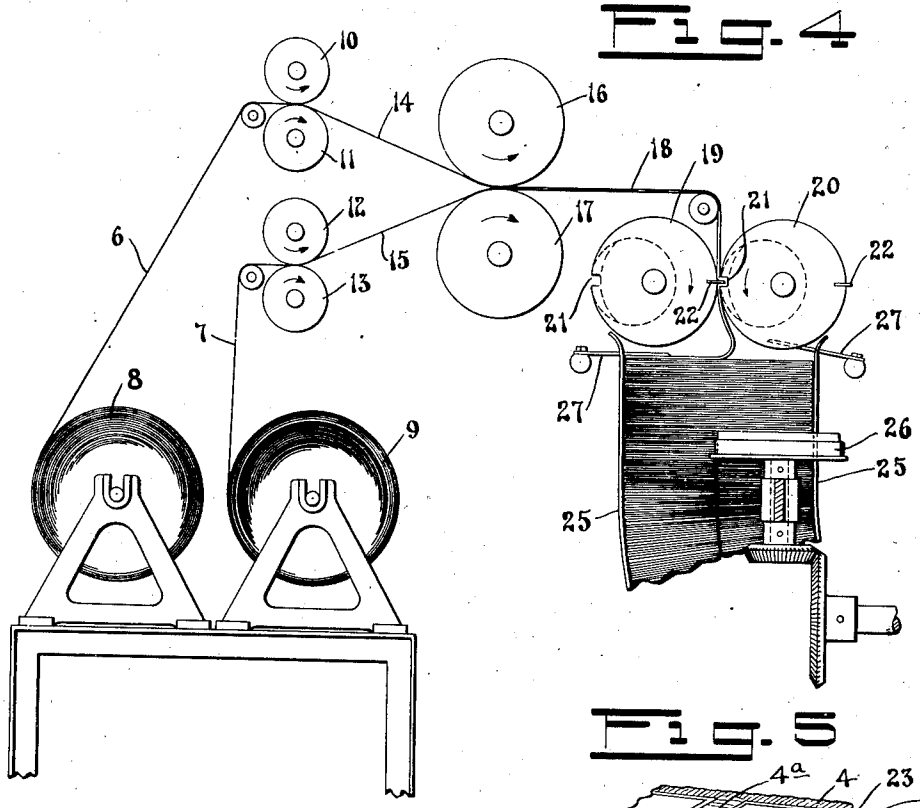

Fig. 5

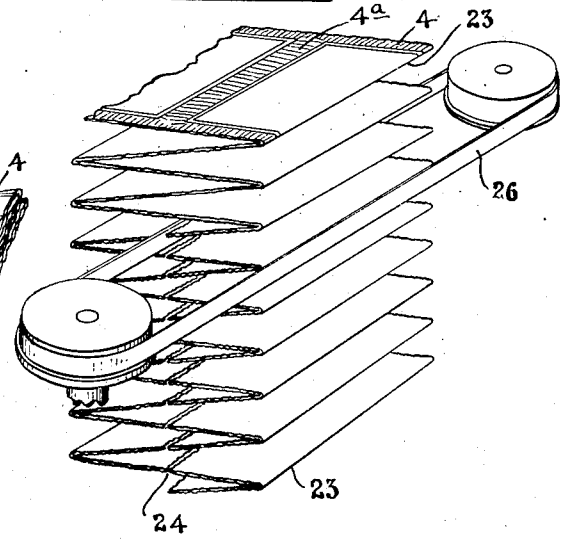

Fig. 6

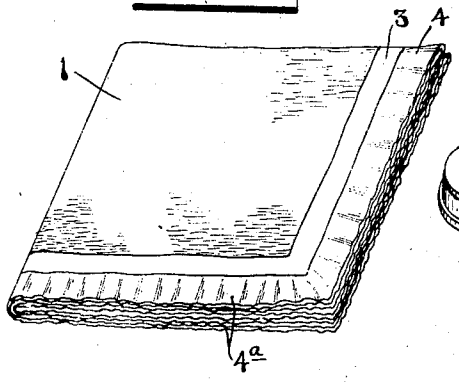

INVENTOR.

Kurt Wandel

BY

his ATTORNEY.

Patented Nov. 12, 1935

2,020,668

UNITED STATES PATENT OFFICE

2,020,668

TISSUE HANDKERCHIEF AND METHOD

Kurt Wandel, New York, N. Y.

Application March 22, 1935, Serial No. 12,455

12 Claims. (Cl. 154—2)

This application covers a new and useful improvement in cellulose crepe tissue towels and handkerchiefs.

The paper towel composed of superposed sheets of extremely soft, highly absorbent crepe tissue has become a familiar article of commerce and is, perhaps, the most widely used accessory to the toilet for the removal of cosmetics from the face and other similar uses. The use of such crepe tissue as handkerchiefs is also increasing rapidly in popularity.

The essential characteristic of the type of crepe tissue referred to is that it shall be as uniformly soft and as absorbent as possible, consistent with the necessary strength. From the commercial point of view it is equally essential, particularly when used as a handkerchief, that it shall be dainty and attractive and shall resemble closely the fabric equivalent which long usage has established in the public mind as the standard of comparison.

The primary object of this invention is the production of a towel or handkerchief of the type described in which certain structural defects in present day articles of this character are eliminated and which is of enhanced daintiness and fidelity in its simulation of the linen equivalent.

A handkerchief has been selected as the type of article best suited to illustrate the invention, but it will be remembered that this places no similar restriction upon the scope of the invention.

The handkerchief composed of two or more sheets of crepe tissue such as employed in this invention is, of course, not broadly new. For example, in my Patent No. 1,771,983, granted July 29, 1930, there is disclosed such a handkerchief in which the two sheets are caused to adhere to each other over a band extending around the extreme edges and inwardly a distance equal to the hem of a linen handkerchief. The primary object of this band which is obtained by simply pressing the sheets together is the simulation of the hem of the linen handkerchief. The result is not wholly satisfactory in appearance since the pressing unavoidably makes the hem thinner than the body, whereas to simulate the linen handkerchief it should be thicker. Also, such marginal pressing introduces a much more serious physical defect in that the edges of the handkerchief are thereby made so hard and sharp that they may scratch a delicate skin or, in any event, cause an extremely unpleasant sensation.

A partial cure for the first difficulty was obtained by the invention of my Patent No. 1,774,497 granted August 26, 1930, in which instead of a flat pressed marginal band a mere line of compression is employed along the extreme outer and inner edges of the hem. This leaves the hem at least as thick as the center and simulates more closely the appearance of a linen handkerchief. However, the extremely undesirable hard, sharp edges remain, the handkerchief being no different in this respect than its predecessor having the band pressed hem.

It has been realized for some time that this defect must be eliminated and, also, that, while a quite satisfactory imitation of a severely plain hemmed linen handkerchief has been obtained, something daintier would be much more appealing to feminine fancy. However, no one succeeded in obtaining either of these objects before the present invention was made.

The handkerchief, the method of making it and the machine for the purposes are shown in the drawings, of which

Figure 1 is a view of a paper handkerchief embodying the invention;

Fig. 2 is a cross-section of the same handkerchief taken along the line 2—2 of Fig. 1 and viewed as indicated in the direction of the arrows;

Fig. 3 is a fragmentary view of the same handkerchief during its manufacture before it is severed from the tissue web;

Fig. 4 is a diagrammatic side elevation of a machine by which the handkerchief may be manufactured and which also serves to illustrate the method of manufacture.

Fig. 5 is a diagrammatic illustration showing the manner in which the tissue web is folded and how the individual handkerchief may be severed from the strip; and

Fig. 6 is a view of the handkerchief of Fig. 1 completely folded and ready for packing or sale.

As already stated, the handkerchief of this invention is composed of two or more sheets of very soft and thin, highly absorbent cellulose crepe tissue, such as that now in common use as facial tissue for the removal of cosmetics, etc. The handkerchief of the drawings consists of two such sheets 1 and 2 which are superposed but unattached to each other except along a band or line 3 which may be of any desired width but which lies a substantial distance inside the margin of the handkerchief ordinarily equal to the hem.

Within the central portion bounded by band 3 the two sheets lie naturally one upon the other in relatively close contact but in the outer border or hem 4 and 4a outside of the band 3, each sheet

is independently ruffled so that these sheets are not only unattached but, for the most part, are physically separated because of the fact that the ruffling of one fails to complement that of the other. This is best shown in Figs. 2 and 6.

Band 3, which may be produced by pressing the two sheets together in these areas, serves to maintain the sheets in proper relative position, and, also, to produce a slight angular divergence between the ruffled hems of the individual sheets, as best shown in Fig. 2, and, thirdly, to prevent the sheets from separating in case the handkerchief is picked up by the ruffled edge of a single sheet.

This construction results in a handkerchief in which the two sheets are entirely separate except along the band 3 inside of the hem, which has a very dainty ruffled hem, and retains substantially all of the original softness of the component sheets, the harsh edges being wholly eliminated. It is, therefore, evident that the shifting of band 3 inwardly from the edge is not a mere effort to obtain an appearance of novelty at variance with practical fact but actually makes possible a new and better tissue handkerchief which is soft in every part, including the extreme edges, and which, in appearance, is acceptable by the most fastidious.

The handkerchief described may be produced upon the machine diagrammatically shown in Fig. 4 and by the following method. Two separate webs 6 and 7 of suitable crepe tissue are fed from rolls 8 and 9 between press rollers 10 and 11, and 12 and 13 respectively. These rolls are so formed that the side margins of the tissue webs over a width corresponding to the hem 4 are subjected to sufficient pressure to flatten them materially, the other portions of the tissue remaining unpressed. The elimination or partial elimination of the creping along the margins by this operation elongates these margins and produces the ruffled hem 4. Rolls 10 and 11, 12 and 13, are also provided with cross bars adapted to exert a similar transverse pressure upon the respective webs of tissue over an area twice the width of a single hem 4 and at distances equal to the length of a handkerchief to form the transverse hems 4ª of two adjacent handkerchief sections, see Fig. 3. Since there is relatively little transverse stretch to crepe tissue it may be found desirable to produce this transverse ruffled hem by employing bars having suitably fluted surfaces so arranged that the ruffling produced by one will not coincide with that of the other. The type of press rolls required for rolls 10 and 11, 12 and 13 are well known to those skilled in the art and, for that reason, have been only diagrammatically shown in the drawings.

After the two tissue webs have passed through rolls 10 and 11, 12 and 13 respectively, to form the ruffled hems they are led, as shown at 14 and 15, to another pair of rolls 16 and 17 where they are brought together so that the pressed hems 4 and 4ª of one coincide exactly with those of the other and by which both webs are simultaneously subjected to an additional pressing over the areas 3 of Fig. 1, the rolls being suitably shaped to press these areas without pressing other portions. As is well known, simple pressure will cause sheets of tissue of this character to adhere together with considerable tenacity. Also pressure along the areas 3 just inside of the ruffled hem will cause the outer edges of the hems to separate angularly, as best shown in Fig. 2, and in this way the separation of the two sheets in the hem resulting from the failure of the individual ruffings to coincide is accentuated. Substantially the same result may be secured if desired by substituting for pressed band 3 a single narrow line of compression similar to that illustrated in my Patent No. 1,774,497 referred to above.

The strip now has the appearance shown in Fig. 3, the handkerchief being completed with the exception of folding and severing. Folding may be accomplished in any desired way, such as by passing the multiple sheet web shown at 18 between a pair of folding rolls 19 and 20, each of which is provided with a transverse slot 21 and a transverse bar 22, respectively cut into and projecting above the surface of each roll and diametrically opposed to each other. Rolls 19 and 20 are of the same diameter and so arranged that the bar 22 of one roll will enter slot 21 of the other as the rolls turn. The circumferential length of each roll is equal to twice the length of the handkerchief so that when the strip of tissue 18 is fed between them it will be pressed into slot 21 of one roll by bar 22 of the other, once for each half revolution of the roll. The effect of this is to cause the strip as it emerges between the rolls to tend to follow, first one roll, say 19, and then roll 20, as indicated in Fig. 4, so that the strip is folded back and forth after the manner of accordion plaiting, as shown in Fig. 4 and also in Fig. 5. If the tissue strip 18 is fed between the folding rolls 19 and 20 so that the fold produced by slots 21 and bars 22 occur exactly along the transverse medial axis 23 (Fig. 3) of each handkerchief the result, as shown in Fig. 5, will be that all of the pressed bands 3 and hems 4 and 4ª will lie directly above one another. Therefore, to separate the web into individual handkerchiefs all that is required is to cut them apart along the medial line 24 of the double transverse hems 4ª as best shown in Fig. 5.

The severing of the individual handkerchiefs from the web may be done progressively as the stack of accordion plaited paper moves outwardly from the folding rolls between guides 25 as diagrammatically illustrated in Fig. 4. This move ment may be assisted by providing rocking stripper fingers 27 to consolidate the stack of folded handkerchiefs and move it progressively towards the severing device.

Severing should, of course, be done in such a way that the edges of the sheets are not thereby caused to adhere together. It is difficult to do this with a knife type of cutter because mere pressure is sufficient to cause such adhesion. A high speed band saw is suitable for the purpose and such a saw is diagrammatically shown at 26 in Figs. 4 and 5. It is, of course, mounted in such a way that its cutting edge will be in exact alignment with the longitudinal axis of the double transverse hems 4ª. By this severing operation the continuous tissue web is transformed into individual handkerchiefs having the characteristics described including hems composed of unattached, separately pressed, ruffled soft edged sheets, and which are folded once as shown in Fig. 5. If desired they may be packed in this form or folded again in the other direction as shown in Fig. 6.

If desired the hems 4ª and pressed areas 3 may be omitted on the ends, the ruffled hems 4 and pressed band 3 appearing on the two longitudinal margins only, a construction suitable for towels. All of the other characteristics are

preserved, in particular, the softness of the extreme outer edges.

For a handkerchief of more than two sheets additional webs of tissue will, of course, be required and also additional sets of press rolls similar to 10 and 11 for pressing each additional web individually. However, the method followed is exactly the same, each web being first pressed individually along the hems and then all the webs being brought together for simultaneous pressing as described.

Since some prefer a handkerchief of greater thickness than others a large number of webs of tissue may be employed as above described, to form a pad of handkerchiefs from which any number of sheets may be removed simply by grasping the desired number of adjacent ruffled edges and stripping that number of sheets from the pad. Each unit so stripped will embody the characteristics of this invention as will the pad itself.

Also, instead of pressing a line on narrow band 3 only inside of the individually pressed hems, the entire area inside of the hems may be pressed if desired. In that case the sheets will be caused to adhere together over their entire areas with the exception of the hems which are individually pressed as described, and remain separate. Such a structure is excellent for cocktail doilies and similar uses.

What I claim is:

1. A handkerchief consisting of a plurality of superposed sheets of soft cellulose crepe tissue compressed together in a narrow area so as to cause the sheets to adhere at those portions but elsewhere to be movable one upon the other, the outer edge of said area being spaced inwardly from the outer edges of said sheets.

2. A handkerchief consisting of a plurality of superposed sheets of soft cellulose crepe tissue compressed together in a narrow area so as to cause the sheets to adhere at those portions but elsewhere to be movable one upon the other, the outer edge of said area being spaced inwardly from the outer edges of said sheets, each of said sheets having individually compressed marginal portions.

3. A handkerchief consisting of a plurality of superposed sheets of soft cellulose crepe tissue compressed together in a narrow area so as to cause the sheets to adhere at those portions but elsewhere to be movable one upon the other, the outer edge of said area being spaced inwardly from the outer edges of said sheets, each of said sheets having individually compressed and ruffled marginal portions.

4. A handkerchief consisting of superposed sheets of soft cellulose crepe tissue, the edges of each of which are individually ruffled by compression.

5. The method of making a cellulose tissue handkerchief which consists of individually compressing marginal portions of each of a plurality of sheets of cellulose tissue, superposing said sheets so that the individually compressed portions coincide, then simultaneously compressing said sheets inwardly of said individually pressed portions.

6. The method of making a cellulose tissue handkerchief which consists of individually compressing marginal portions of each of a plurality of sheets of cellulose tissue, superposing said sheets so that the individually compressed portions coincide, then simultaneously compressing all of said sheets inwardly of said individually pressed portions along a narrow area.

7. The method of making a cellulose tissue handkerchief which consists of individually compressing marginal and transverse portions of each of a plurality of sheets of cellulose tissue, superposing said sheets so that the individually compressed portions coincide, then subjecting all of said sheets to simultaneous compression applied inwardly of said individually compressed portions along a narrow area, and severing said sheets along the longitudinal axis of the areas of individual transverse compression.

8. The method of making a cellulose tissue handkerchief which consists of individually compressing marginal portions of each of a plurality of cellulose tissue webs, superposing said webs so that said individually compressed portions coincide, then subjecting all of said webs to simultaneous pressure applied inwardly of said individually compressed portions, and then severing said webs into sections.

9. The method of making a cellulose tissue handkerchief which consists of individually compressing marginal and transverse portions of each of a plurality of cellulose tissue webs, superposing said webs so that said individually compressed portions coincide, subjecting all of said webs to simultaneous compression inwardly of said individually compressed portions, and then severing along the longitudinal axis of said individually compressed transverse portions.

10. A pad of cellulose tissue handkerchiefs consisting of a plurality of superposed sheets of soft absorbent cellulose crepe tissue compressed together in a narrow area, so as to cause the sheets to adhere at those portions but elsewhere to be movable one upon the other, the outer edge of said area of compression being spaced inwardly from the edges of the sheets.

11. A doily consisting of a plurality of superposed sheets of soft cellulose tissue compressed together inwardly of the edges so as to cause the sheets to adhere together and having ruffled marginal portions in which the sheets are separate.

12. A doily consisting of a plurality of superposed sheets of soft cellulose tissue compressed together inwardly of the hem and having ruffled, marginal portions in which each sheet is individually pressed.

KURT WANDEL.