March 15, 1966 R. M. FRIEDENBERG 3,240,396

AEROSOL DISPENSER

Filed June 11, 1963 2 Sheets-Sheet 1

FIG. 1

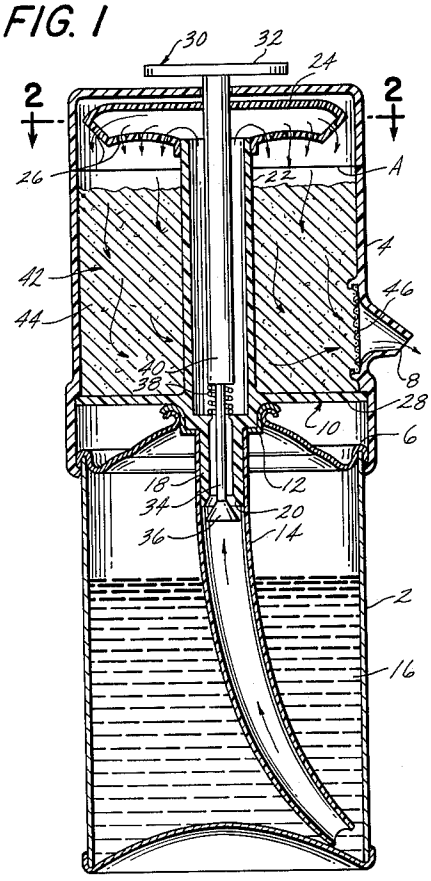

FIG. 3

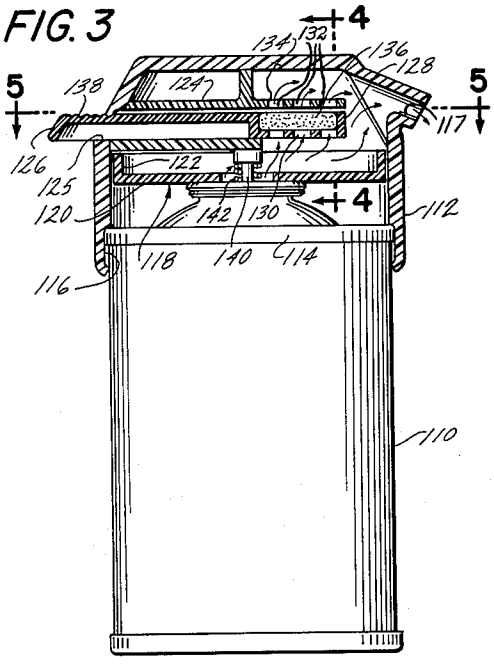

FIG. 5

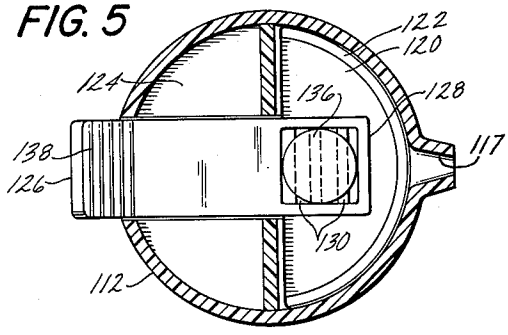

FIG. 2

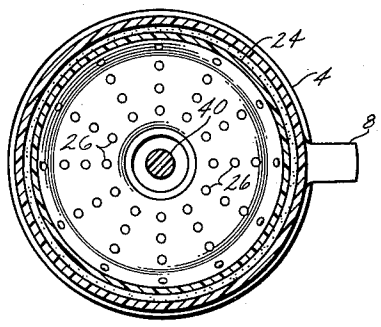

FIG. 4

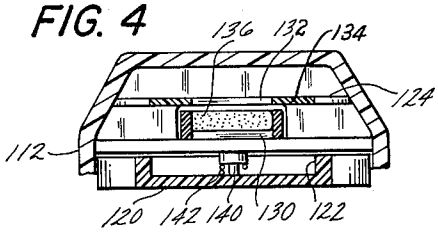

INVENTOR.
ROBERT M. FRIEDENBERG
BY
Peter L. Costas
ATTORNEY

March 15, 1966 R. M. FRIEDENBERG 3,240,396

AEROSOL DISPENSER

Filed June 11, 1963 2 Sheets-Sheet 2

FIG. 6

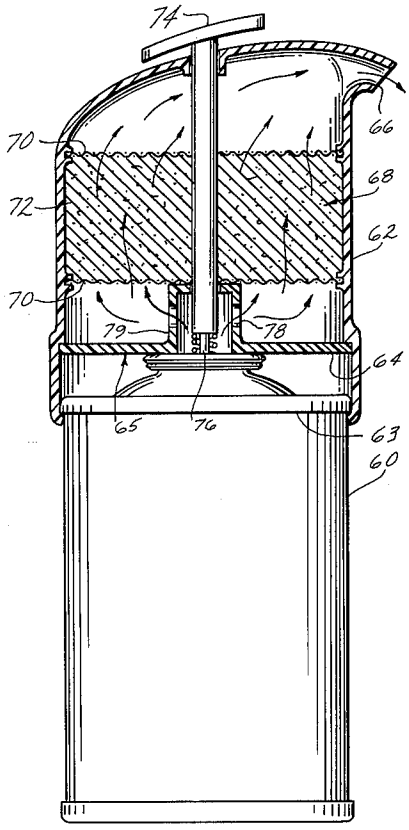

FIG. 7

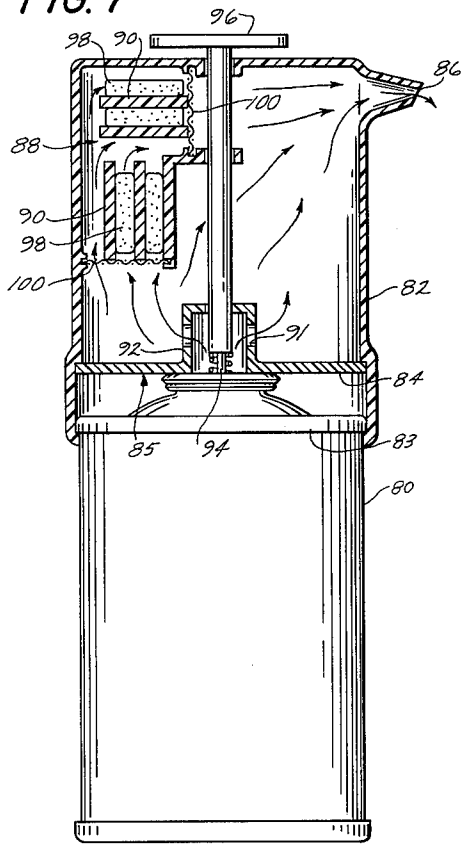

INVENTOR.
ROBERT M. FRIEDENBERG

BY

Peter L. Costas

ATTORNEY

United States Patent Office 3,240,396
Patented Mar. 15, 1966

3,240,396

AEROSOL DISPENSER

Robert M. Friedenberg, Storrs, Conn. (Ruxton Towers, 8415 Bellona Lane, Baltimore, Md.)

Filed June 11, 1963, Ser. No. 286,982
19 Claims. (Cl. 222—146)

The present invention relates to aerosol dispensers, and more particularly to a novel aerosol dispenser for aqueous media having self-contained means for elevating the temperature of the aqueous media being discharged therefrom.

Aerosol dispensers have become widely utilized for various liquids including soaps such as shaving creams and shampoos, cosmetics of various types such as colognes and deodorants, chemical agents such as lacquers, enamels and cleaners, topical medicaments, etc., actuatable by pressure applied externally of the casing so as to release the liquid from the reservoir to the discharge opening. Generally, such aerosol dispensers have a casing providing a reservoir containing the liquid and the propellant, a discharge opening and a valve. Oftentimes, it may be desirable to elevate the temperature of the liquid for the intended application such as warming shaving cream to be applied to the face or warming a viscous liquid prior to application to reduce viscosity and facilitate distribution.

It is an object of the present invention to provide an aerosol dispenser having self-contained means for elevating the temperature of an aqueous medium being discharged therefrom.

Another object is to provide such an aerosol dispenser which may be fabricated relatively simply and economically and which is easy to operate and relatively foolproof.

It is also an object to provide such an aersol dispenser which permits facile replacement of relatively small quantities of heating agent during use of relatively large quantities of aqueous medium.

A specific object is to provide an aerosol container for elevating the temperature of soap emulsions being discharged therefrom.

A further object is to provide a facile and relatively economical method for warming aqueous medium being discharged form an aerosol dispenser reservoir.

Other objects and advantages will be readily apparent from the following detailed specification and the attached drawings wherein:

FIGURE 1 is a side elevational view of an aerosol dispenser embodying the present invention with portions of the casing and valve assemblies broken away to reveal internal construction;

FIGURE 2 is a sectional view along the line 2—2 of FIGURE 1;

FIGURE 3 is a side elevational view of another embodiment of the present invention with portions thereof broken away to reveal internal construction;

FIGURE 4 is a sectional view along the line 4—4 of FIGURE 3;

FIGURE 5 is a sectional view along the line 5—5 of FIGURE 3;

FIGURE 6 is a side elevational view of still another embodiment of the present invention with portions thereof broken away to reveal internal construction; and

FIGURE 7 is a similar view of a further embodiment of the present invention.

It has now been found that the foregoing and related objects may be readily attained by an aerosol dispenser having a casing assembly providing a reservoir, a discharge outlet and a reactant chamber adjacent the discharge outlet. An aqueous medium and a propellant

are located in the reservoir and means are provided for releasing the aqueous medium from the reservoir under the pressure of the propellant to the discharge outlet including a valve actuatable by pressure applied externally of the casing assembly and a conduit for said aqueous medium opening adjacent the reactant chamber for passage of at least a portion of the aqueous medium therethrough prior to the discharge outlet. A hydrophilic thermogenic agent is provided in the reactant chamber for reaction with water in the portion of aqueous medium being passed therethrough to produce a thermogenic reaction and elevate the temperature of the aqueous medium flowing through the discharge outlet.

As will be readily appreciated, the reactant chamber is conveniently formed by a separate cap member with a discharge nozzle for combination with a pressurized vessel acting as the reservoir to provide the casing assembly. The reactant chamber may comprise but a portion of the flow passage through the cap member so as to effect contact with but a portion of the aqueous medium flowing therethrough or the reactant chamber may extend across the entire flow path to effect contact with the entire flow of aqueous medium. Contact between thermogenic agent and aqueous medium may be intimate by use of granular thermogenic agent or satisfactory contact may be obtained by contact of the aqueous medium with the surface of tablets or wafers of relatively large width. The casing assembly may permit periodic removal of the thermogenic agent in the reactant chamber so as to permit reduction in the volume of the thermogenic agent required for optimum effectiveness with a large mass of aqueous medium in the reservoir and resultant reduction is size of the casing assembly.

The term "aqueous medium" as used herein refers to solutions, dispersions and emulsions employing water as the dominant component or vehicle thereof; i.e., in an amount greater than 50 percent by weight thereof and preferably greater than 75 percent by weight thereof.

The term "thermogenic agent" refers to hydrophilic chemical compounds which hydrate or dissolve readily in water in a strongly exothermic reaction and which will not materially affect the properties of the aqueous medium in either the anahydrous or the hydrated or dissolved state. Generally, such compounds are inorganic salts, although oxides may be employed when the basicity of the reaction product will not affect the properties or the application of the aqueous medium. For applications involving contact with the skin such as a shaving cream or shampoo dispenser, the hydrophilic thermogenic compound (and its hydrated form) should be non-toxic and non-irritating in even the relatively small amounts dissolved per application.

THERMOGENIC AGENT

Those thermogenic agents which may be employed satisfactorily are those which have a relatively high heat of solution per gram in relatively large molar ratios of water so as to avoid the requirements for large amounts of thermogenic agent to achieve the desired warming and also to avoid unnecessary interference with the aqueous medium. Various compounds may provide a sufficiently high heat of solution to provide feasibility of usage, including metallic oxides and hydroxides such as sodium hydroxide, calcium oxide and barium oxide, salts such as aluminum bromide, aluminum chloride, magnesium chloride, and stannous chloride. Of the various compounds having a satisfactorily high heat of solution per gram for convenient usage which have been evaluated to date, only magnesium chloride has the freedom from toxicity sataisfactory for use in dispensers for aqueous media intended for topical application such as shaving creams and shampoos.

In rabbit patch tests using standard shaving cream formulations and the standard shaving cream formulations as warmed by the present invention with magnesium chloride, no evidence of toxicity or sensitivity has been observed and no indication of toxicity is found in the standard reference works.

Magnesium chloride is thus the preferred and highly desirable thermogenic agent of the present invention. Indicative of the method of determining the amount of anhydrous magnesium chloride required to warm an aqueous medium containing about 100 grams water are the following computations:

Molecular weight ..... 95.23.
Heat of solution ..... 35,920 calories per 800 mols of water (Lange's Handbook of Chemistry).

Using standard equation for

$$\Delta H = Cp(T_2 - T_1)$$

wherein:

ΔH=heat evolved in calories per 800 mols H_2O
Cp=heat capacity in calories/mol H_2O per ° C.
T=temperature in degrees centigrade T_2=final temperature, T_1=initial temperature)

and substituting known values with T_1 the ambient or room temperature of 30 degrees centigrade,

$35{,}920 = (800 \times 18)\ (T_2 - 30)$
$T_2 - 30 \cong 2.5$
$T_2 \cong 32.5$

Thus, one mol of $MgCl_2$ (95.23 g.) will effect a 2.5 degree centigrade rise in temperature of 800 mols of H_2O from an ambient temperature of 30 degrees centigrade.

Applying this value to 100 grams of water,

$$\frac{2.5}{x} = \frac{100}{14{,}400}$$

$x = 360°$ increase by 95 grams $MgCl_2$.

To produce a theoretical 20° increase would require

$$\frac{20}{360} = \frac{x}{95} \cong 5.3 \text{ grams } MgCl_2$$

Thus, approximately 5.3 grams magnesium chloride will elevate 100 grams of water about 20 degrees centigrade from ambient temperature if operating efficiently.

Similar evaluations may be made readily with respect to other compounds. Heats of solution and molecular weights of compounds having relatively high heats of solution per gram are set forth in the table below, although problems of irritation and toxicity may preclude their use for topical application.

Table 1

Compound	Molecular Weight	Heat of Solution	
		Kilo Calories	Mols H_2O
$AlBr_3$	266.72	85.3	3,000
$AlCl_3$	133.34	76.8	1,250
$SnCl_2$	189.60	35.2	1,100
BaO	153.36	35.6	666
CaO	56.08	18.3	2,500
NaOH	40.01	9.94	200
KOH	56.10	13.9	250

In using the thermogenic agent, it is also important that adequate and continuing contact with the aqueous medium be obtained. As will be readily appreciated, the mechanism of the present invention involves the hydration and solution of a portion of the thermogenic agent in a portion of the water in effective contact therewith.

The pressure and turbulence of the aqueous medimum produces mixing of the heated portion with unheated portions of the aqueous medium to achieve desired warming throughout. Caking or coating of the surface of the particles with relatively insoluble barrier layers of partially hydrated material also should be avoided. Thus, a granulated material or a disintegratable tablet may be employed. When a granulated material is employed, the mechanism should spread the reaction of the mass of thermogenic agent over the total period of dispensation of the contents or a predetermined period thereof, conveniently by limiting the volume of aqueous medium coming into effective contact therewith. When a disintegratable tablet or large granules are employed, the use of non-interfering binders may serve to limit the effective contact per single period of dispensation to the desired degree. If so desired, the casing may be constructed so as to permit periodic refilling of the reaction chamber with thermogenic agent as it becomes spent.

In using pure anhydrous magnesium chloride in granular form, a material which passed a No. 30 mesh screen was found satisfactory to ensure adequate effective contact. Although lubricants and anti-caking agents such as magnesium stearate and cellulose (AVICEL, American Viscose Company) may be added in amounts of 1.0 to 15.0 percent by weight, the preferred granular materials operate satisfactorily without such additives.

In fabricating tablets of magnesium chloride, hard pressing the pure anhydrous material produces a tablet which does not disintegrate sufficiently rapidly in contact with water so that only a negligible amount of heat is evolved per period of dispensing. Although a soft pressed tablet disintegrates satisfactorily, it is extremely friable and disintegrates easily upon slight impact, thus making it unsatisfactory for general use without some form of disintegratable binder. Magnesium stearate and cellulose (AVICEL, American Viscose Company) in about 5.0 to 15.0 percent by weight, and preferably about 10.0 percent by weight with granulated magnesium chloride of less than 30 mesh has proven generally satisfactory in providing a more impact-resistant tablet with satisfactory disintegratability in contact with water.

Since the fine granules of magnesium chloride exhibit little tendency towards caking, the unadulterated granules of magnesium chloride are preferred because of greater heat evolution per unit volume.

AQUEOUS MEDIA

As previously stated, the method of the present invention may be employed for warming various types of aqueous media wherein the reaction with a portion of the water may take place and will not materially interfere with the properties of the aqueous medium for the intended application. Generally, the aqueous media comprise emulsions or solutions of one or more active chemical components with various other compounds such as emulsifiers and stabilizers.

Of the various types of aqueous media, soap formulations such as shaving creams and shampoos are readily and highly desirably warmed by the method of the present invention. Generally, such formulations are emulsions containing at least 75.0 percent by weight water. Although magnesium chloride has proven effective with all commercial foam formulations tested with relatively little breaking of the foam, generally it is preferable to use formulations with concentrations of water above about 85.0 percent for optimum effectiveness.

In using very dilute emulsions, greater stability may be obtained by incorporating colloidal materials such as methylcellulose, sodium carboxymethylcellulose, polyvinyl pyrrolidone and polyvinyl alcohol, and water-soluble salts of polyacrylic acid or derivatives thereof such as potassium, ammonium and alkanolamine salts. Such stabilizers are beneficial in amounts of about 0.5 to 3.0 percent by weight.

Coconut soap lathers profusely and is useful in preventing the formation of a gel at low temperatures. Glycerine may be incorporated in shaving creams to improve the stability of the lather during shaving.

Non-ionic emulsifying agents such as the MYRJ and BRIJ compounds may also be included to promote emulsification of free fatty acids.

Creamy lathers for shaving are conveniently obtained by mixtures of fatty acids such as stearic/coconut in an 80:20 ratio, palmitic/myristic in a 75:25 ratio and stearic/coconut/oleic in an 80:10:10 ratio. Exemplary of desirable additives for imparting creaminess are castor oil, cetyl alcohol, glyceryl monostearate and fatty acid amides.

Exemplary of shaving cream formulations which have proven highly advantageous are the following:

Formulation No. 1:	Percent by weight
Cetyl alcohol	6.00
Polyethylene glycol 600 monostearate	2.00
Isopropyl myristate	1.25
Sorbitol solution (70% by wt.) (Sorbo, Atlas Powder)	3.00
Coconut oil	0.25
Perfume	0.30
Water	83.20
Acid stabilized glyceryl monostearate (Tegacid, Goldschmidt Chemical Corp.)	1.00
Formulation No. 2:	
Cetyl alcohol	2.00
Polyoxyethylene stearyl ether (BRIJ 72)	2.00
Isopropyl myristate	1.20
Sorbitol solution (70% by wt., Sorbo, Atlas Powder)	3.00
Coconut oil	0.30
Perfume	0.30
Water	90.20
Acid stabilized glyceryl monostearate (Tegacid, Goldschmidt Chemical Corp.)	1.00
Formulation No. 3:	
Coconut fatty acids	1.00
Dodecyl sulfate	10.50
Lanolin derivative	0.80
Cetyl alcohol	0.50
Non-ionic detergent (Span 60, Atlas Chemical Co.)	0.50
Non-ionic detergent (Tween 60, Atlas Chemical)	4.50
Mineral oil	0.50
Sorbitol solution (70% by wt., Atlas Powder, Sorbo)	3.00
Perfume	0.50
Water	78.20
Formulation No. 4:	
Potassium soaps of palmitic/myristic acids 75/25 ratio	2.0
Palmitic/myristic acids 75/25 ratio	2.0
Potassium polyacrylate (M. wt. 100,000–200,000)	1.5
Polyoxyethylene tallow alcohol (8–10 mols ethylene oxide)	1.5
Lauric acid diethanolamide	0.5
Perfume	0.5
Water	91.5

PROPELLANTS

Various propellants are commonly used in aerosol dispensers and are available for use in the present invention. Generally, low-pressure systems are contemplated having a pressure of about 17 to 40 pounds per square inch, and preferably about 25 pounds. Dichlorodifluoromethane and dichlorotetrafluoroethane are most widely employed, generally in combination in ratios of about 0.65–1.5:1.

As an emulsion of soap and propellant in water is released from the reservoir, the propellant expands and produces myriads of small bubbles in a resultant creamy, rich lather. To facilitate the foam formation, the casing assembly of the present invention provides an expansion area prior to the discharge outlet to facilitate the expansion of the gas.

Generally, the propellant may be used in an amount equal to 5 to 25 percent by weight of the contents of the reservoir and preferably about 5 to 10 percent for soap formulations. Exemplary propellant-soap formulations for shaving cream dispensers are as follows:

Formulation No. 1:	Percent by weight
Shaving cream Formulation No. 2	92.0
Dichlorodifluoromethane	3.2
Dichlorotetrafluoroethane	4.8
(Initial pressure—25 p.s.i.).	
Formulation No. 2:	
Shaving cream Formulation No. 3	93.0
Dichlorodifluoromethane	4.0
Dichlorotetrafluoroethane	3.0
(Initial pressure—30 p.s.i.).	

CASING ASSEMBLY

As previously stated, the reactant chamber and discharge outlet are provided in a cap element which is combined with a reservoir element to provide the casing assembly. In this manner, the filling of the reservoir with the aqueous medium and propellant and mounting of the valve assembly and the filling of the reactant chamber may be effected separately and more easily.

The casing assembly, including separate cap and reservoir elements when employed, may be fabricated from metal, glass, plastic-coated glass or suitable synthetic resins such as nylon, melamine-formaldehyde, phenol-formaldehyde, and polycarbonate. When synthetic resin is used for the cap element, it should be relatively resistant to localized internal temperatures of about 150 to 190 degrees centigrade. By use of synthetic resins for the cap element, complex formations may be readily molded therein by compression or injection molding techniques.

When granulated thermogenic agent is employed, screening or baffles should be incorporated to prevent undesired flow or loss of particles of the thermogenic agent. When tablets of the thermogenic agent are utilized, clips or ribs are employed to hold the tablets against excessive movement and screening also may be employed. To reduce the volume of thermogenic agent and thereby that of the reaction chamber and casing assembly, the assembly desirably may permit periodic replacement of the thermogenic agent during usage of the aerosol dispenser. This may be effected by a separable portion of the casing assembly providing access to the reaction chamber or by a slide member which will position a tablet in the reaction chamber.

The separate cap element has a flow path therethrough to the discharge orifice and the reaction chamber is located therein so as to contact or have flow therethrough at least a portion of the aqeuous medium. This may be effected by having the conduit from the reservoir chamber open adjacent thereto and to the opposite side of the discharge outlet so that the bulk, if not all, of the aqueous medium flows therethrough, or by baffling in the cap member to divert a portion of the aqueous medium therethrough, or by supporting tablets at one side of the flow path so that the aqueous medium comes in contact with at least one surface thereof.

Thus, the reaction chamber may extend across the entire flow path of the aqueous medium as it travels to the discharge outlet by filling all or a portion of the hollow cap member with thermogenic agent or it may extend across but a portion thereof so as to have flowing therethrough only a portion of the aqueous medium with the heat generated therein being transmitted by the contacted portion to the remainder of the medium largely due to the intimate contact and turbulence in the flow path and in the discharge outlet.

THE VALVE ASSEMBLY

As conventionally employed, aersosol dispensers include a valve assembly comprised of a conduit for passage of the aqeuous medium and propellant outwardly from the reservoir, a valve controlling flow through the conduit, and means for actuating the valve by pressure applied externally of the casing assembly. Generally, the conduit comprises an elongate tubular member or dip tube extending downwardly into the reservoir and may include a discharge tube on the downstream side of the valve which often-times doubles as the valve core as well as a fitting for supporting the tube(s).

Several types of valves are commonly employed, including those wherein the valve core is moved vertically from its seat to permit flow therearound or deflected laterally from the seat to permit flow thereby. The valve core may be hollow and serve as a discharge tube or portion of the conduit. Various specialty valves may be employed including metering valves, although conventional foam valves are preferred for the emulsion foam compositions of widest adaptability to the present invention.

Although the valve core may be actuated directly by having it extend to the exterior of the casing assembly, it is more desirable to employ a separate actuator which may be the cap member itself movably mounted in the casing assembly and biased into valve-closing position or a pressure rod actuatable by pressure outwardly of the casing and biased outwardly by a spring in the valve or independent thereof. Whatever the form of actuating means employed, the dispenser should provide means for preventing accidental operation of the valve as by a lock position on the actuating means or by an outer cap extending thereover.

THE ILLUSTRATED EMBODIMENTS

Referring now in detail to FIGURES 1 and 2 of the drawings, therein is illustrated an aerosol dispenser embodying the present invention wherein the casing assembly is provided by a reservoir canister **2** of generally circular cross section and a hollow cap member **4** of generally circular cross section secured thereto by forming about the bead **6**. The hollow cap member **4** has a discharge tube or outlet **8** projecting outwardly therefrom adjacent the lower end thereof which opens on the interior of the hollow cap member **4**.

An integrally formed valve seat and conduit member generally designated by the numeral **10** is secured in the neck of the reservoir canister **2** by a mounting sleeve **12** and has depending therefrom the dip tube **14** which extends down into the liquid aqueous medium and propellant mixture **16**. The depending portion **18** of the member **10** provides an annular beveled valve seat **20** at its lower end and the upstanding conduit portion **22** has mounted thereon the distributor **24** of generally circular cross section and having orifices **26** spread across its lower surface. Extending radially thereof is the web portion **28** which lends support and stability to the cap member **4**. Slidably mounted in the cap member **4**, distributor **24** and conduit and valve seat member **10** is the valve core and actuator member generally designated by the numeral **30** having a bottom portion **32** at its upper end outwardly of the cap member **4** and a valve core portion **34** at its lower end with an outwardly beveled head **36** which seats in the valve seat **20** of the member **10**. The head **36** of the valve core portion **34** is biased into seated position by the coil spring **38** about the core portion **34** and acting between the conduit member **10** and the shoulder at the bottom of the rod portion **40**.

In this embodiment, substantially the entire interior of the hollow cap member **4** provides the reactant chamber generally designated by the numeral **42** and filled with granules **44** of thermogenic agent. A screen **46** across the outlet **8** prevents escape of the granules **44** of thermogenic agent therethrough. As indicated by the line A, the cap member **4** is desirably fabricated in two pieces to facilitate filling thereof.

In the embodiment of FIGURES 3–5, the casing assembly is again provided by a separate reservoir canister **110** and cap member **112** which is slidably retained thereon by the bead **114** which seats in the annular recess **116**. The cap member **112** has a discharge tube or orifice **117** adjacent its upper end. The valve seat member generally designated by the numeral **118** has a web portion **120** extending radially outwardly to a peripheral wall portion **122** in sliding engagement with the peripheral wall of the cap member **112**.

An internal support and partitioning web **124**, conveniently separately formed and secured therein, cooperates with an aperture **125** in the cap member **112** to provide a sliding seat for the slide member **126** which has a tablet-receiving portion **128** at its inner end having transverse slots **130** in its lower wall cooperating with slots **132** in the overlying portion **134** of the partitioning web **124** to permit flow of a portion of the aqueous medium therethrough and about the tablet **136** of thermogenic material received therein. At its outer end the slide member **126** has a plurality of transverse corrugations **138** in its upper surface, the innermost of which snap-fits into engagement with the cooperating upper edge defining the aperture **125** to seat the slide member **126** firmly in position.

When the cap member **112** is depressed, the partitioning web **124** thereof depresses the valve core member **140** against the biasing pressure of the spring **142** to open the valve and permit the aqueous medium and propellant (not shown) to flow therethrough and upwardly through the cap member **112** wherein a portion thereof passes about the tablet **136** and intermixes with the remaining portion prior to and during passage outwardly of the outlet **117**. The web portion **120** and the sliding engagement of the peripheral wall portion **122** limit the aqueous medium from flowing downwardly thereabout and the partitioning web **124** and slide member **126** limit flow thereof towards the aperture **125** in the cap member **112**.

When the tablet **136** is expended, the slide member **126** may be withdrawn for placement of a new tablet. Thus, the space required for the thermogenic agent may be reduced to minimize the overall dimension of the cap member and casing assembly.

Thus, in each of the foregoing embodiments, the application of pressure externally of the casing opens the valve to permit propellant and aqueous medium to flow into contact with the thermogenic agent and to react therewith for generation of heat. In some embodiments, only a portion of the aqueous medium contacts the thermogenic agent, but turbulence and intimate contact of this portion with the remainder of the aqueous medium distribute the heat throughout the discharged mass.

Referring now to the dispenser embodiment of FIGURE 6, the casing assembly is similarly provided by a separate reservoir canister **60** and a separate cap member **62** secured thereto by the forming of the bottom edge about the bead **63** and the web portion **64** of the valve seat and conduit member generally designated by the numeral **65**. The discharge outlet or tube **66** is located adjacent the upper end of the cap member **62** and the reaction chamber generally designated by the numeral **68** is defined by a pair of screen members **70** extending across the interior of the cap member **62** and between which granulated thermogenic agent **72** is placed. When the discharge member **74** is depressed, the valve core portion **76** thereof is depressed from its seat (not shown) and the propellant and aqueous medium (not shown) pass outwardly through the orifices **78** in the conduit portion **79** and flow upwardly through the interior of the cap member **62** and thermogenic agent **72** in the reaction chamber **68** wherein hydration takes place to generate heat and the gaseous propellant expands. To facilitate refilling the reaction chamber **68**, the cap member **62** may

be made in two parts and these may be disengageably assembled to permit replacement of the thermogenic agent **72**, if so desired, over the life of the dispenser.

In the dispenser embodiment of FIGURE 7, the casing assembly is again provided by a separate reservoir canister **80** and separate cap member **82** secured thereto by forming about the bead **83** the stabilizing web portion **84** of the conduit and valve seat member generally designated by the numeral **85**. The discharge outlet or tube **86** is located adjacent the upper end of the cap member **82** and the reaction chamber generally designated by the numeral **88** is defined by a plurality of ribs **90**, conveniently molded integrally in the cap member **82**, and located at the side thereof spaced from the discharge outlet **86**. Three of the ribs **90** extend vertically and two extend horizontally along the top of the cap member to provide a form of baffled flow path for a portion of the propellant and aqueous medium (not shown) issuing from the orifices **91** in the conduit portion **92** in response to depression of the valve core portion **94** from its seat (not shown) by movement of the discharge member **96**. Secured between the ribs **90** are pressed tablets **98** of thermogenic agent and screens **100** are desirably employed to prevent displacement of the tablets **98** or disintegrated fragments thereof. Thus, the aqueous medium and propellant mixture will expand as it discharges from the conduit **92** and a portion of the flow will pass about the tablets **98** in the reaction chamber **88** while the greater portion will pass directly to the discharge outlet **86**. The heated portion passing through the reaction chamber **88** will admix with the other portion prior to and during passage through the discharge outlet to transfer heat thereto.

Indicative of the efficacy of the present invention are the following specific examples wherein shaving cream formulations were warmed from ambient temperature.

EXAMPLE 1

An aerosol dispenser was prepared having a separate reservoir canister and a synthetic resin cap member with a discharge opening at the base thereof and a distributor conduit transporting the emulsion passing through a standard foam-type valve to the upper end of the cap member, generally similar to the construction shown in FIGURE 1 of the attached drawings. The cap member was relatively shallow and was packed with 1 gram of anhydrous magnesium chloride granulated to pass a 30 mesh screen.

The reservoir was filled with 92 grams of shaving cream Formulation No. 1 and 8 grams of a propellant mixture of dichlorodifluoromethane and dichlorotetrafluoroethane in a 40:60 ratio. The initial pressure in the reservoir was approximately 25 pounds per square inch. After the dispenser had been stored at an ambient temperature of about 30 degrees centigrade, the valve was actuated for a period of time until the shaving cream foam being discharged was no longer being heated substantially. The amount of shaving cream foam discharged during this period was approximately 20 grams, and the temperature of the foam during substantially the entire period of discharge was relatively constant and averaged about 45 degrees centigrade. No appreciable breakdown in the foam emulsion was observed, and the warmed foam felt very comfortable upon the skin.

EXAMPLE 2

An aerosol dispenser was prepared employing separate cap and reservoir canister members with the discharge opening at the upper end of the cap member and the body of the cap member packed with 2 grams of anhydrous magnesium chloride granulated to pass a 30 mesh screen. The general construction was similar to that shown in FIGURE 6 of the drawings.

The reservoir was filled with 93 grams of shaving cream Formulation No. 3 and 7 grams of a propellant mixture of dichlorodifluoromethane and dichlorotetrafluoroethane in a 57:43 ratio. The initial pressure in the canister was determined at about 30 pounds per square inch.

After storage at ambient temperature of about 30 degrees centigrade, the valve was actuated to discharge foam until it was no longer being heated substantially. The foam dispensed during the period of heating weighed approximately 40 grams, and the temperature thereof was relatively constant at about 47 degrees centigrade. No breakdown of the foam emulsion was noted, and the shaving cream felt comfortably warm upon the skin.

It can be seen from the foregoing detailed specification and examples that the present invention may be readily adapted to various types of aqueous media and particularly those which are for topical applications such as shaving cream, shampoos, and lotions, etc. Although other chemical compounds may be employed where toxicity and pH are not of significance, magnesium chloride represents the ideal thermogenic agent because of its lack of toxicity, neutrality and substantial freedom from interference with various types of aqueous media. The entire volume of aqueous medium may be passed through the reaction chamber in contact with the thermogenic agent or only a portion thereof with the heated portion transferring heat to the remainder. To reduce the volume of thermogenic agent required for a given mass of aqueous medium, the dispenser may conveniently permit periodic replacement of the thermogenic agent in the reaction chamber.

Thus, the present invention provides an aerosol dispenser having self-contained means for elevating the temperature of an aqueous medium being discharged therefrom which may be fabricated relatively simply and economically and which is easily operated and relatively foolproof. The dispenser may permit facile replacement or relatively small quantities of the thermogenic agent and is particularly adapted to elevating the temperature of soap emulsions.

Having thus described the invention, I claim:

1. An aerosol dispenser providing a heated aqueous medium comprising a casing assembly providing a reservoir, a discharge outlet and a reactant chamber adjacent said outlet; a thermogenic agent in said reactant chamber; an aqueous medium in said reservoir; a propellant for said aqueous medium in said reservoir; and means for discharging said aqueous medium and propellant from said reservoir including a valve actuatable by pressure applied externally of said casing assembly and a conduit member opening at a point spaced from said discharge outlet, said discharging means and casing assembly directing a portion of the aqueous medium from said reservoir into contact with said thermogenic agent to produce a thermogenic reaction between water in said portion and the thermogenic agent to elevate the temperature of said portion and thence directing said portion to the discharge outlet with reacted medium in said portion being admixed with unreacted medium, thereby to elevate the temperature of the aqueous medium flowing through said discharge outlet.

2. The aerosol dispenser of claim **1** wherein said aqueous medium is a soap emulsion.

3. The aerosol dispenser of claim **1** wherein said portion directed into contact with said thermogenic agent comprises substantially all of said aqueous medium being discharged from said reservoir.

4. The aerosol dispenser of claim **1** wherein said thermogenic agent is anhydrous magnesium chloride.

5. The aerosol dispenser of claim **1** wherein said reactant chamber extends between said conduit member and said discharge outlet.

6. An aerosol dispenser providing a heated aqueous medium comprising a casing assembly providing a reservoir, a discharge outlet and a reactant chamber adjacent said outlet; a thermogenic agent in said reactant chamber; an aqueous medium in said reservoir; a propellant for

said aqueous medium in said reservoir; a conduit member in said reservoir opening at a point spaced from said discharge outlet and providing a valve seat; a valve element normally closing said conduit member and seating in said valve seat; and means for opening said valve element by pressure applied externally of the casing assembly to discharge said aqueous medium and propellant from said reservoir, said conduit member and casing assembly directing a portion of the aqueous medium from said reservoir into contact with said thermogenic agent to produce a thermogenic reaction between water in said portion and the thermogenic agent and thereby to elevate the temperature of the aqueous medium flowing through said discharge outlet.

7. The aerosol dispenser of claim 6 wherein said aqueous medium is a soap emulsion and wherein said thermogenic agent is anhydrous magnesium chloride.

8. An aerosol dispenser providing a heated aqueous medium comprising a casing assembly having a reservoir canister and a cap member secured thereto, said cap member having a discharge outlet therefrom and a reactant chamber therein; a thermogenic agent in said reactant chamber; an aqueous medium in said reservoir canister; a propellant for said aqueous medium in said reservoir canister; and means for discharging said aqueous medium and propellant from said reservoir canister into said cap member including a valve actuatable by pressure applied externally of said casing assembly and a conduit member opening at a point spaced from said discharge outlet, said discharging means and casing assembly directing a portion of the aqueous medium from said reservoir canister into contact with said thermogenic agent to produce a thermogenic reaction between water in said portion and said thermogenic agent to elevate the temperature of said portion and thence directing said portion to the discharge outlet with reacted medium in said portion being admixed with unreacted medium, and thereby to elevate the temperature of the aqueous medium flowing through said discharge outlet.

9. The aerosol dispenser of claim 8 wherein said aqueous medium is a soap emulsion and said thermogenic agent is anhydrous magnesium chloride.

10. The aerosol dispenser of claim 8 wherein said reactant chamber extends across said cap member between said conduit and said discharge outlet.

11. The aerosol dispenser of claim 8 wherein said reactant chamber is situated along one side of said cap member and the discharge outlet is in the other side thereof for passage of only a portion of the aqueous medium therethrough.

12. An aerosol dispenser providing a heated aqueous medium comprising a casing assembly having a reservoir canister and a cap member secured thereto, said cap member having a discharge outlet therein and an aperture in the side thereof spaced from said discharge outlet, said cap member providing a reaction chamber therein; a slide member slidably mounted in said aperture of the cap member, said slide member having its inner end in said reactant chamber; a tablet of thermogenic agent supported upon the inner end of said slide member for contact with aqueous medium flowing through said reactant chamber, said slide member permitting periodic replacement of said tablet; and means for discharging said aqueous medium and propellant from said reservoir, including a valve actuatable by pressure applied externally of said casing assembly, said discharging means and casing assembly directing a portion of the aqueous medium from said reservoir into contact with said thermogenic agent to produce a thermogenic reaction between water in said portion and the thermogenic agent and thereby to elevate the temperature of the aqueous medium flowing through said discharge outlet.

13. The aerosol dispenser of claim 12 wherein said aqueous medium is a soap emulsion and said thermogenic agent is anhydrous magnesium chloride.

14. An aerosol dispenser providing a heated aqueous medium comprising a casing assembly having a reservoir canister and a cap member secured thereto, said cap member having a discharge outlet and a reactant chamber therein; a thermogenic agent in said reactant chamber; an aqueous medium in said reservoir canister; a propellant for said aqueous medium in said reservoir canister; a conduit member in said reservoir canister opening in said cap member at a point spaced from said discharge outlet and providing a valve seat; a valve element normally closing said conduit member and seating in said valve seat; and means for opening said valve element by pressure applied externally of the casing assembly to discharge said aqueous medium and propellant from said reservoir canister, said conduit member and casing assembly directing a portion of the aqueous medium from said reservoir canister into contact with said thermogenic agent to produce a thermogenic reaction between water in said portion and the thermogenic agent to elevate the temperature of said portion and thence directing said portion to the discharge outlet with reacted medium in said portion being admixed with unreacted medium, thereby to elevate the temperature of the aqueous medium flowing through said discharge outlet.

15. The aerosol dispenser of claim 14 wherein said aqueous medium is a soap emulsion and said thermogenic agent is anhydrous magnesium chloride.

16. The method of producing and utilizing a warm aqueous aerosol medium comprising releasing a mixture of an aqueous medium and a propellant therefor from a reservoir under pressure; passing at least a portion of said mixture into direct surface contact with a thermogenic agent to produce a thermogenic reaction between water in said portion and said thermogenic agent; admixing the reacted medium in said portion with unreacted medium, thereby to elevate the temperature of said released mixture; and thereafter utilizing said released mixture including said reacted medium.

17. The method of claim 16 wherein said aqueous medium is a soap emulsion.

18. The method of claim 16 wherein said thermogenic agent is anhydrous magnesium chloride.

19. The method of producing and utilizing a warm aerosol soap foam comprising providing a mixture of an aqueous emulsion of soap and a propellant therefor under pressure; releasing a portion of said mixture from said reservoir; passing at least a portion of said released mixture in contact with magnesium chloride to produce a thermogenic reaction between water in said portion and said magnesium chloride; admixing the reacted medium within said portion with unreacted medium thereby to elevate the temperature of said released mixture; and thereafter utilizing said released mixture including said reacted medium.

References Cited by the Examiner

UNITED STATES PATENTS

1,764,387	6/1930	Buchet	239—133
1,944,108	1/1934	Robinson	239—135 X
2,109,632	3/1938	Athens	132—336
2,352,951	7/1944	Gerhia	44—3 X
2,982,443	5/1961	Ellis	222—1
3,003,662	10/1961	Meshberg	222—1
3,095,122	6/1963	Lewiecki et al.	222—146
3,111,967	11/1963	Bullard.	
3,113,698	12/1963	Abplanalp	222—1

FOREIGN PATENTS

588,091	1/1925	France.

OTHER REFERENCES

Handbook of Chemistry & Physics, September 1954 (Thirty-sixth edition, page 1692).

RAPHAEL M. LUPO, *Primary Examiner.*