A. J. PFOHL.

RESERVE FEED AND SPLICING APPARATUS.

APPLICATION FILED OCT. 6, 1916.

1,261,056.

Patented Apr. 2, 1918.

2 SHEETS—SHEET 1.

Fig. 1.

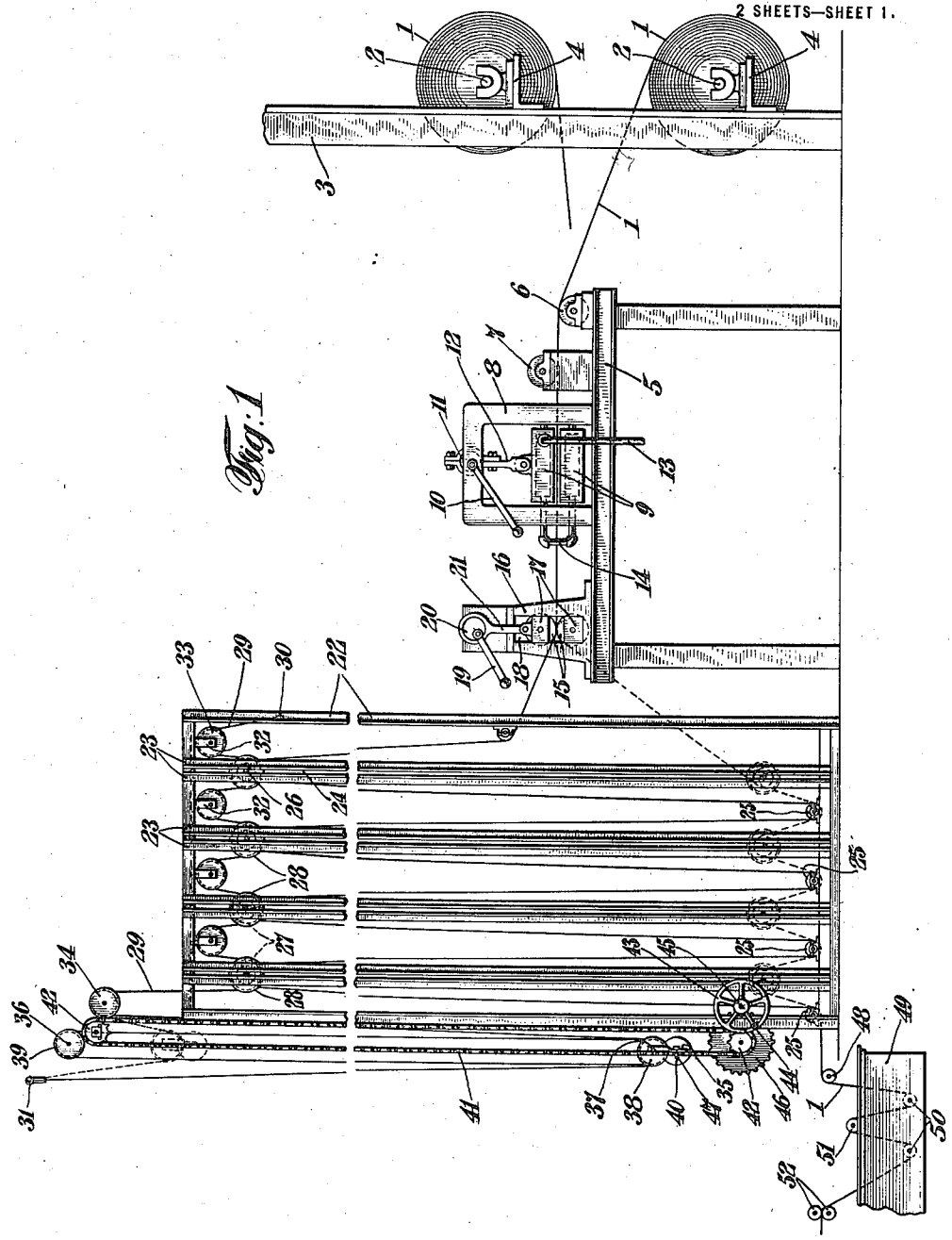

Inventor

Anthony J. Pfohl.

By his Attorneys

Kenyon & Kenyon

A. J. PFOHL.

RESERVE FEED AND SPLICING APPARATUS.

APPLICATION FILED OCT. 6, 1916.

1,261,056.

Patented Apr. 2, 1918.

2 SHEETS—SHEET 2.

Fig. 2

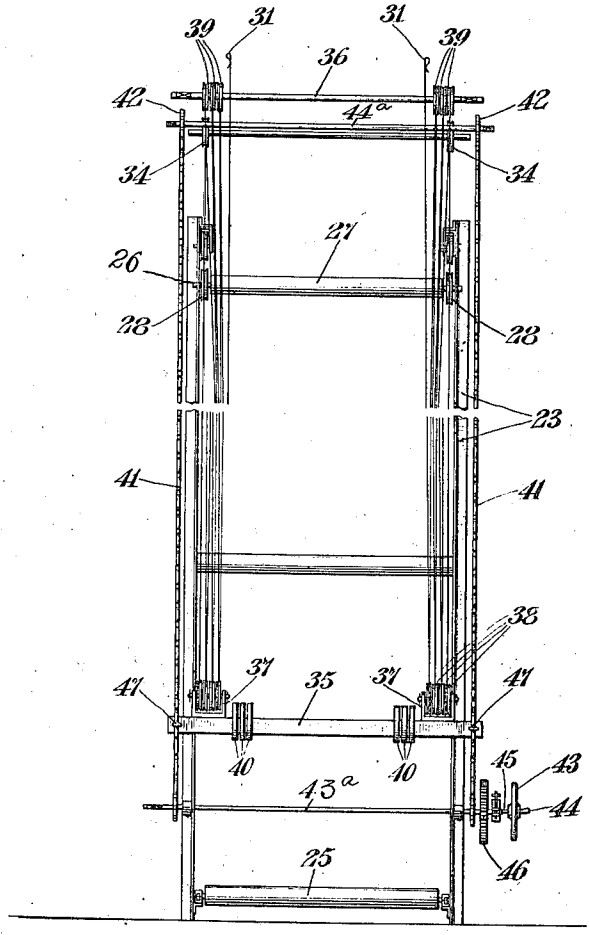

Inventor

Anthony J. Pfohl

By his Attorneys

Kenyon & Kenyon

UNITED STATES PATENT OFFICE.

ANTHONY J. PFOHL, OF LOCKLAND, OHIO, ASSIGNOR TO PHILIP CAREY MANUFACTURING COMPANY, A CORPORATION OF OHIO.

RESERVE FEED AND SPLICING APPARATUS.

1,261,056. Specification of Letters Patent. Patented Apr. 2, 1918.

Application filed October 6, 1916. Serial No. 124,050.

To all whom it may concern:

Be it known that I, ANTHONY J. PFOHL, a citizen of the United States, and a resident of and whose post-office address is Lockland, county of Hamilton, State of Ohio, have invented certain new and useful Improvements in Reserve Feed and Splicing Apparatus, of which the following is a specification.

My invention relates to what I term reserve feed and splicing apparatus and is particularly adapted for use in the manufacture of roofing, or it may be used in the manufacture of other products where it is necessary to splice the ends of paper, felt fabric, etc., together and where it is desirable to have the material fed at a constant and uniform rate to its point of treatment while the splicing operation is being carried on.

In the drawings, Figure 1 is a side elevation of my apparatus; and

Fig. 2 is an end elevation looking from the left of Fig. 1 at the reserve feed.

In the drawings I have shown my invention in use in the manufacture of prepared roofing in which 1, 1 are rolls of felt mounted on shafts or rollers 2 supported on frame 3 by brackets 4. I provide any suitable means for keeping a tension on the roll so as to prevent same from unwinding. 5 is a table upon which are supported guide-rollers 6 and 7 in suitable bearings so arranged that the felt 1 passes over the roller 6 and under the roller 7. 8 is a frame mounted on the table 5 and 9, 9 are dies adapted to be heated and to be brought together so as to compress and heat the spliced joint of the felt between the dies 9, 9. The upper die 9, as shown, is pressed down on the lower die by means of the handle 10 which operates the eccentric 11 to press down the upper die through the link 12. 13, as shown, is a steam pipe leading to the upper die 9. 14 is a steam pipe leading from the upper die to the lower die 9, and suitable outlet is provided from the lower die for the same. The dies 9 may be heated by steam or heated by gas or electrically heated, as desired. 15, 15 are two rollers mounted in uprights 17, 17, adapted to be moved toward and away from each other in the grooves 18. 19 is a handle or lever adapted to operate eccentric 20 upon which is mounted a link 21 so as to press down on the block 17 and carry with it the upper roller 15 to force the two rollers 15, 15 firmly together so as to prevent rotation and lock the felt 1 against movement. The felt 1, having passed through the splicing machine over roller 6, under roller 7 between the dies 9, 9 and between the locking rollers 15, 15, passes to the reserve feed, which I will now describe.

22 is a frame having vertical angle irons 23 arranged in pairs so as to provide a vertical slot or track 24. As shown in the drawings, I have provided four of these vertical tracks or slots, but as many more or less may be used as will obtain the desired results. 25 are rollers loosely mounted in bearings but fixed in their relation at the bottom of the frame. 27 (see Fig. 2) is a roller mounted upon a shaft 26, the ends of which shaft are located so as to travel in the track or slot 24. 28 is a sheave fixedly mounted on the shaft 26 around which a flexible support 29 (which may be of rope, chain, leather, or suitable material) passes. The ends of this support 29, as shown, are fixed at 30 and 31. Of course, if desired an endless belt could be used by the addition of two sheaves located above the frame, but the form shown is the preferred one.

Attached to the top of the frame, or at a suitable location on the frame, are stirrups or brackets 32 supporting sheaves 33 in fixed relation to the frame. The flexible support 29 being fixed at 30 passes over the first sheave 33 (from right to left) then sheave 28 mounted on shaft 26, upon which is mounted roller 27, then over the second sheave, then over the second sheave mounted on the roller shaft, then the third fixed sheave, then the third movable sheave, then the fourth fixed sheave, then the fourth movable sheave.

34 is an idle sheave, suitably mounted, over which the flexible support 29 then passes. 35 is a movable bar. 36 is a fixed shaft. Upon the movable shaft are located a series of sheaves 38 supported in brackets or stirrups 37. Upon the shaft 36 are located a series of sheaves 39. After the flexible support 29 has passed over the sheave 34 it passes down around one of the sheaves 38, then over one of the sheaves 39, then 38, then 39, then 38, then 39, then 38 and up to its fixed point 31. The movable

bar 35 is movable in a vertical direction and is provided with removable weights 40 adapted to maintain a tension on the support 29. 41 is an endless sprocket chain passing around sprockets 42, 42 fixedly secured in place on the shafts 43ª and 44ª. This sprocket chain may be moved by means of the wheel 43 provided with a handle 44, which wheel is fixedly mounted on shaft 45, having a gear adapted to engage with the large sprocket wheel 46 fixedly secured to the shaft, upon which is mounted the lower sprocket wheel 42. The movable bar 35 is fixedly secured to the sprocket chain at 47, 47. 48 is an idler roll around which the felt 1 passes. 49 is a saturating tank provided with rolls 50, 51. 52 are rollers rotated by any suitable power adapted to compress the felt between them to remove the surplus saturation and to exert sufficient pull on the felt to draw same through the saturating tank and through the reserve feed from the rolls 1.

The operation of my invention is as follows: A roll of felt having been mounted on the supports and passed through the splicing machine and through the reserve feed when it is desired to splice or attach to it another roll, the locking lever 19 is operated to compress the rollers 15, 15 so as to hold the end of the felt 1 in fixed position while the splicing operation is being carried on. As it is desirable to maintain a constant and uniform passage of the felt throughout the saturation, it will be seen that as the rolls 52, 52 continue to operate, after the locking rollers 15, 15 have prevented any movement of the felt at the end on the splicing table, the felt will tend to pull down on the rolls 27 and the support 29 for these rolls 27 permits the rolls 27 to move down in the track 24 until they are in the position shown in dotted lines in Fig. 1. While this takes place the length of the flexible support 29 between the fixed sheaves 33 and the sheaves 28 mounted on the shafts 26 on which the rolls 27 are mounted increases while the distance between the sheaves 38 and 39 decreases. In other words, the movable bar 35 is raised toward the fixed shaft 36 so as to allow the greater part of the flexible support 29 to be used for supporting the rolls 27 at their various positions between the position shown at the top of Fig. 1 and the position shown in dotted lines at the bottom of Fig. 1. The weights 40 constantly maintain tension on the support 29 while this is taking place. When the splicing operation is completed and the locking rollers 15, 15 are released the operator operates the wheel 43 rotating the shaft 45, sprocket 46 and lower sprocket 42 so as to move the endless sprocket chain 41. As this is done it carries with it the movable bar 35 fixed to the sprocket chain 41 down until the sheaves 38 and 39 have assumed the position shown in Figs. 1 and 2 in full lines, and the sheaves 28 and the rolls 27 have assumed the position shown in full lines in Fig. 1. As this is being done, of course, the rolls 52 being constantly rotating and constantly drawing the felt, there is no stoppage of the supply of felt passing through the saturating tank and hence a constant and uniform supply is maintained.

Having described my invention, what I claim as new and desire to secure by Letters Patent, is:

1. In apparatus of the character described, a support rotatably mounted in a fixed position, a support normally mounted at a distance apart from said first-mentioned support and a flexible support for permitting said last-mentioned support to be moved from said fixed support and separate means for maintaining a tension on said flexible support.

2. In a reserve feed apparatus for permitting continuous feeding of strip material, a fixed strip material support, a strip material movable support normally spaced apart from said fixed support and a flexible support permitting said movable support to be moved toward said fixed support and separate means for maintaining a tension on said flexible support.

3. In a reserve feed apparatus for permitting continuous feeding of strip material, a fixed strip material support, a strip material movable support normally spaced apart from said fixed support, a flexible support for permitting said movable support to be moved toward said fixed support and means for returning said movable support to its normal position.

4. In a reserve feed apparatus for strip material, a plurality of rotatable rolls in series spaced apart arranged so that the material passes alternately around a roll of one series and then a roll of another series, and a flexible support to permit said series of rolls to be moved toward each other and separate means for maintaining a tension on said flexible support.

5. In a reserve feed apparatus for strip material, a plurality of rotatable rolls in series spaced apart arranged so that the material passes alternately around a roll of one series and then a roll of another series, a flexible support to permit said series of rolls to be moved toward each other and means for supporting said rolls in their normal position and separate means for maintaining a tension on said flexible support.

6. In a reserve feed apparatus for strip material, a plurality of rotatable rolls in series spaced apart arranged so that the material passes alternately around a roll of one series and then a roll of another series, means to permit said series of rolls to be

moved toward each other and means for supporting said rolls in a plurality of positions.

7. In a reserve feed apparatus for strip material, series of rolls normally arranged in parallel for supporting the material alternately over a roll of one series and then a roll of another, means for supporting said series normally spaced apart and means to permit the normal distance apart of said series to be reduced.

8. In a reserve feed apparatus for strip material, series of rolls normally arranged in parallel for supporting the material alternately over a roll of one series and then a roll of another, means for supporting said series normally spaced apart, means to permit the normal distance apart of said series to be reduced and means for returning said rolls to their normal position.

9. In a felt reserve feed apparatus, a series of fixed rotatable guides for said felt, a series of rotatable guides movable toward and away from said fixed guides, a series of sheaves, a flexible support for said movable guides passing alternately around a sheave and then a movable guide, the ends of said support being fixedly secured at suitable points and means for maintaining a tension on said support.

10. In a felt reserve feed apparatus, a series of fixed rotatable guides for said felt, a series of rotatable guides movable toward and away from said fixed guides, a series of sheaves, a flexible support for said movable guides passing alternately around a sheave and then a movable guide and means for maintaining a tension on said support.

11. In a reserve feed apparatus, series of rolls normally spaced apart, a flexible support for one of said series to permit said series to be moved toward and away from its companion series and separate means for maintaining a tension on said flexible support.

12. In a reserve felt feed apparatus, two sets of rolls, a flexible support for the rolls of one set having its ends fixed, fixed sheaves for said support so arranged that the support passes alternately around a sheave and a roll, two separate sets of sheaves, the distance apart of which may be varied and around which the support passes, means to maintain a tension on said support, all so arranged that the relative distance apart of said two separate sets of sheaves will be varied by any variation in the distance apart of said sets of rolls and means for returning said rolls to their normal distance apart.

13. In a reserve felt feed apparatus, two sets of rolls, a flexible support for the rolls of one set, fixed sheaves for said support so arranged that the support passes alternately around a sheave and a roll, two separate sets of sheaves, the distance apart of which may be varied and around which the support passes, means to maintain a tension on said support, all so arranged that the distance apart of said separate sets of sheaves will be varied by any change in the distance apart of said sets of rolls and means for returning said rolls to their normal distance apart.

14. In a reserve felt feed apparatus, two sets of rolls, a flexible support for the rolls of one set having its ends fixed, fixed sheaves for said support so arranged that the support passes alternately around a sheave and a roll, two separate sets of sheaves the distance apart of which may be varied and around which the support passes, means to maintain a tension on said support, all so arranged that the distance apart of said two sets of rolls may be varied and means for returning said rolls to their normal distance apart.

15. In a reserve felt feed apparatus, two sets of rolls, a flexible support for the rolls of one set having its ends fixed, fixed sheaves for said support so arranged that the support passes alternately around a sheave and a roll, two separate sets of sheaves, the distance apart of which may be varied and around which the support passes.

16. In a reserve felt feed apparatus, two sets of rolls, a flexible support for the rolls of one set having its ends fixed, fixed sheaves for said support so arranged that the support passes alternately around a sheave and a roll, two separate sets of sheaves, the distance apart of which may be varied and around which the support passes, one of said sheave sets mounted on a movable support and means for moving said support.

17. In a reserve felt feed apparatus, two sets of rolls, a flexible support for the rolls of one set having its ends fixed, fixed sheaves for said support so arranged that the support passes alternately around a sheave and a roll, two separate sets of sheaves, the distance apart of which may be varied and around which the support passes, one of said sheave sets mounted on a movable weighted support and means for moving said support.

18. In a reserve felt feed apparatus, two sets of rolls, a flexible support for the rolls of one set having its ends fixed, fixed sheaves for said support so arranged that the support passes alternately around a sheave and a roll, two separate sets of sheaves, the distance apart of which may be varied and around which the support passes, one of said sheave sets mounted on a movable support and an endless belt adapted to move said support.

19. In a reserve felt feed apparatus, a frame, two sets of rolls, guide-ways for the rolls of one set, a flexible support for the rolls of one set having its ends fixed, fixed

sheaves for said support so arranged that the support passes alternately around a sheave and a roll, two separate sets of sheaves, the distance apart of which may be varied and around which the support passes, means to maintain a tension on said support, all so arranged that the distance apart of said two sets of rolls may be varied by reducing the distance apart of said separate sets of sheaves and means for returning said rolls to their normal distance apart.

20. In a reserve felt feed apparatus, a frame, two sets of rolls, guide-ways for the rolls of one set, a flexible support for the rolls of one set having its ends fixed, fixed sheaves for said support so arranged that the support passes alternately around a sheave and a roll, two separate sets of sheaves, the distance apart of which may be varied and around which the support passes, means to maintain a tension on said support, all so arranged that the distance apart of said two sets of rolls may be varied by reducing the distance apart of said separate sets of sheaves, means for returning said rolls to their normal distance apart and locking means to engage a portion of the felt passing through the reserve feed.

21. In a reserve feed and splicing apparatus, means for locking the end of the material to be spliced against movement, heat and compression splicing means on one side of the locking means and means on the opposite side of the locking means permitting constant feeding of the material to its place of treatment.

22. In a reserve feed and splicing apparatus, means for locking the end of the material to be spliced against movement, splicing means on one side of the locking means and means on the opposite side of the locking means permitting constant feeding of the material to its place of treatment.

23. In a reserve feed and splicing apparatus, locking means adapted to engage with a portion of the material passing through the apparatus, heat and compression splicing means on one side of the locking means, reserve feed mechanism on the opposite side of said locking means comprising a fixed strip material support, a strip material support spaced apart from said fixed support and a flexible support for permitting movement of said movable support toward and away from said fixed support all so arranged that the material is constantly and uniformly fed when a portion is engaged by the locking means.

24. In apparatus for the saturation of felts, a saturating tank, means for passing the felt through the tank, splicing means for splicing the adjacent ends of the felt, a locking device to hold said end of said felt while it is spliced and reserve feed means located between said lock and said tank comprising rolls arranged in series normally spaced apart, means permitting the distance apart of said rolls to be varied, all so arranged that when the felt is locked the continued feeding of the felt is permitted by the reduction in the distance apart of said series of rolls.

In testimony whereof, I have signed my name to this specification.

ANTHONY J. PFOHL.