United States Patent [19]

Thundercloud

[11] **Patent Number: Des. 313,789**

[45] **Date of Patent: ** Jan. 15, 1991**

[54] **FLOOR MAT**

[75] Inventor: **Robert Thundercloud,** Chino, Calif.

[73] Assignee: **Kraco Enterprises, Inc.,** Compton, Calif.

[**] Term: **14 Years**

[21] Appl. No.: **216,991**

[22] Filed: **Jul. 11, 1988**

[52] **U.S. Cl.** **D12/203**

[58] **Field of Search** D12/203; 296/1.1; 15/215, 217

[56] **References Cited**

U.S. PATENT DOCUMENTS

D. 288,799	2/1987	Peress	D12/203
3,488,081	1/1970	Nolen	15/215
3,526,016	9/1970	Stata	D12/203
3,577,581	7/1971	Stata	15/215
4,280,729	7/1981	Morawski	15/215

Primary Examiner—Susan J. Lucas
Assistant Examiner—Melody Brown

[57] **CLAIM**

The ornamental design for a floor mat, as shown and described.

DESCRIPTION

FIG. **1** is a top plan view of a floor mat embodying my new design;
FIG. **2** is a bottom plan view thereof;
FIG. **3** is a right side elevation view thereof shown on a slightly enlarged scale, the left side being substantially identical to the right side;
FIG. **4** is a lower end elevation view thereof;
FIG. **5** is an upper end elevation view thereof;
FIG. **6** is a longitudinal cross-sectional view thereof, taken along line **6—6** of FIG. **1**, and shown on the same scale as FIG. **3**;
FIG. **7** is a transverse cross-sectional view thereof, taken along line **7—7** of FIG **1**;
FIG. **8** is a transverse cross-sectional view thereof, taken along line **8—8** of FIG. **1**;
FIG. **9** is an enlarged, fragmentary cross-sectional view taken along line **9—9** of FIG. **1**;
FIG. **10** is an enlarged, fragmentary cross-sectional view taken along line **10—10** of FIG. **1**; and
FIG **11** is an enlarged, fragmentary cross-sectional view taken along line **11—11** of FIG. **1**.

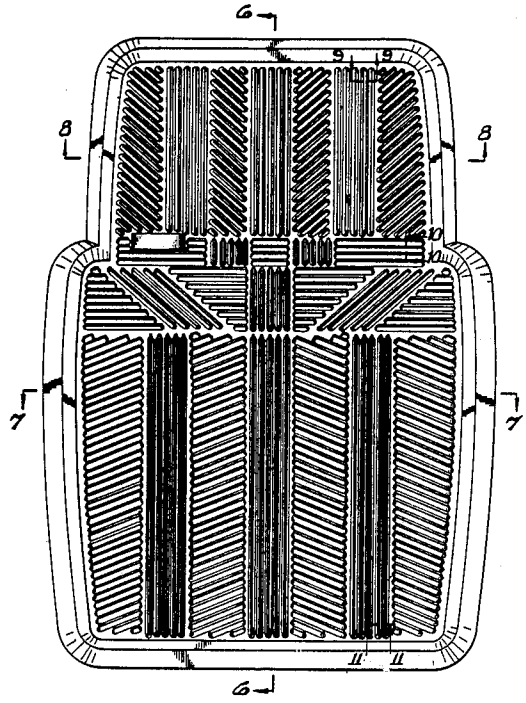

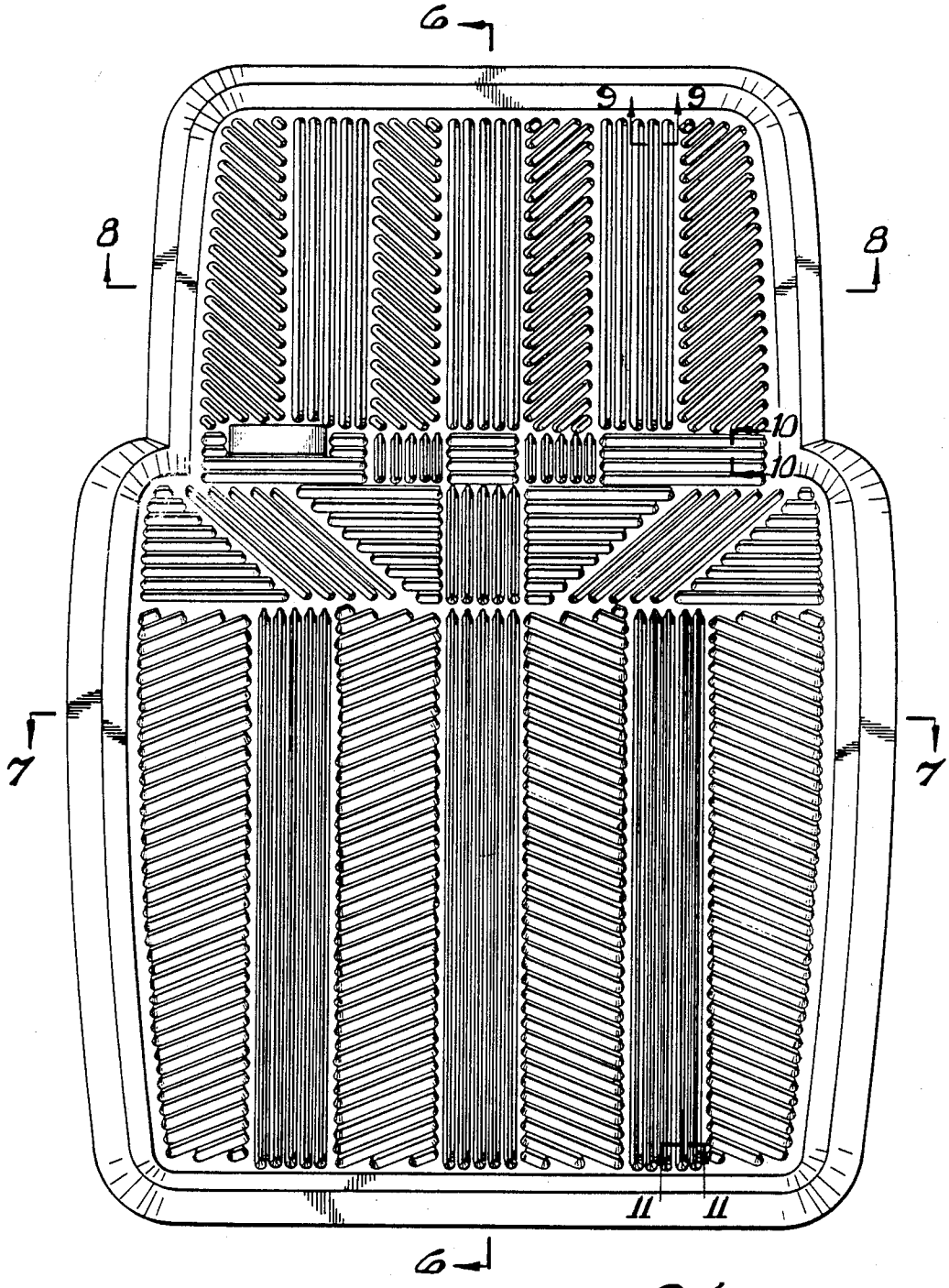

FIG. 1.

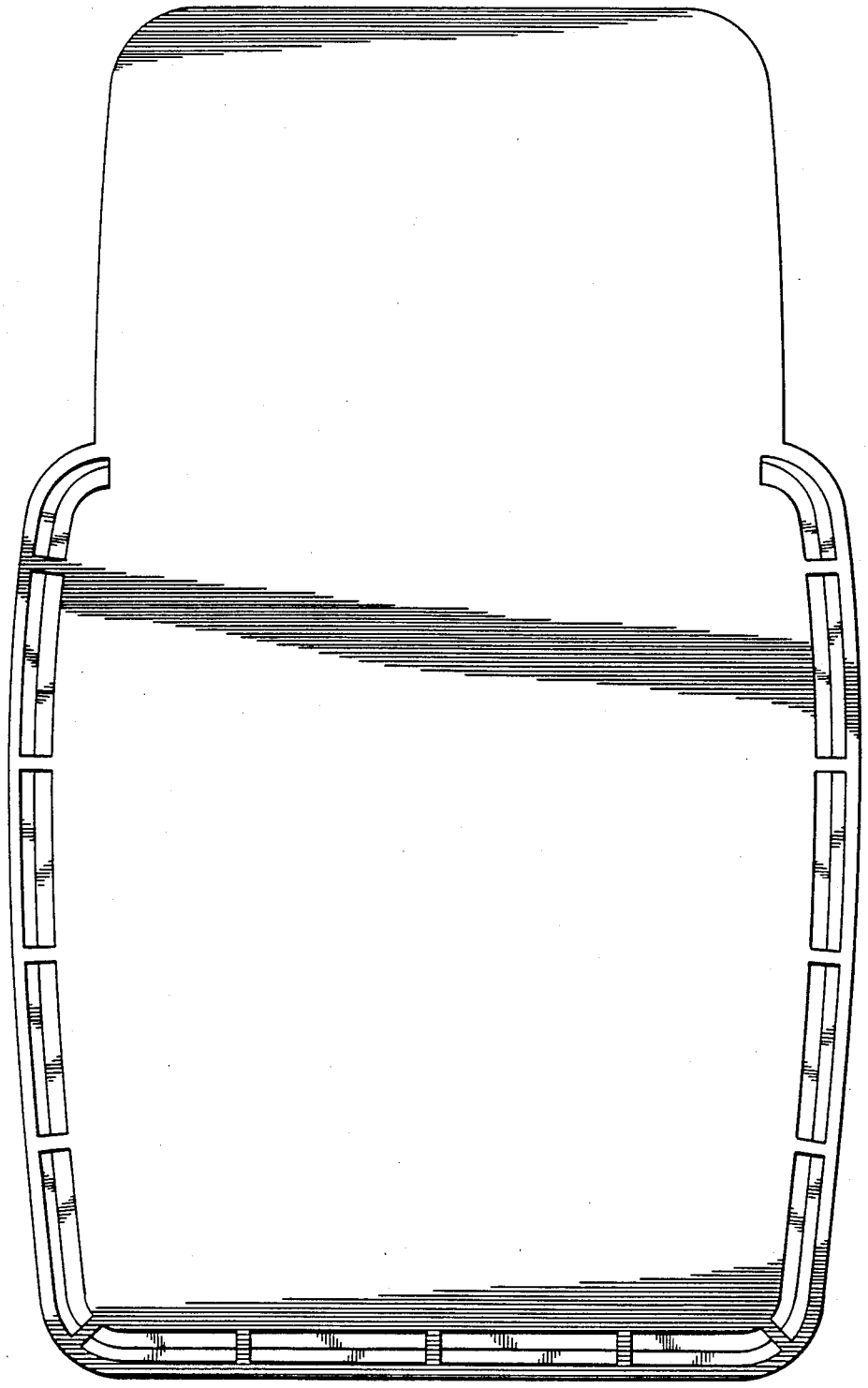

FIG. 2.

FIG.3.

FIG.4.

FIG.5.

FIG.6.

FIG.7.

FIG.8.

FIG.9.

FIG.10.

FIG.11.