L. C. BURNS.

MARINE STEERING GEAR.

APPLICATION FILED AUG. 29, 1912.

1,073,954. Patented Sept. 23, 1913.

Fig. 1.

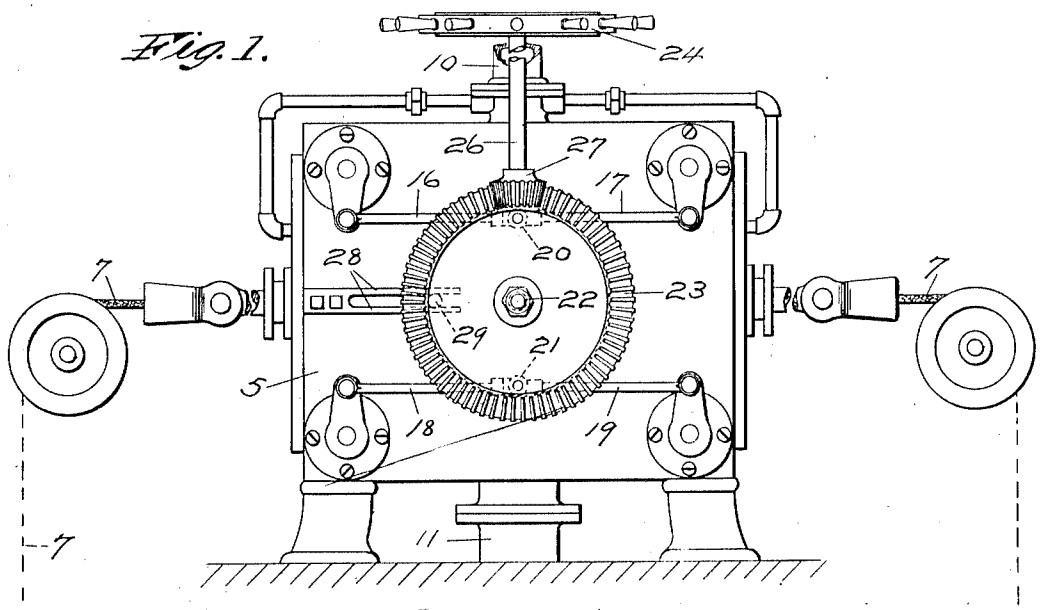

Fig. 2.

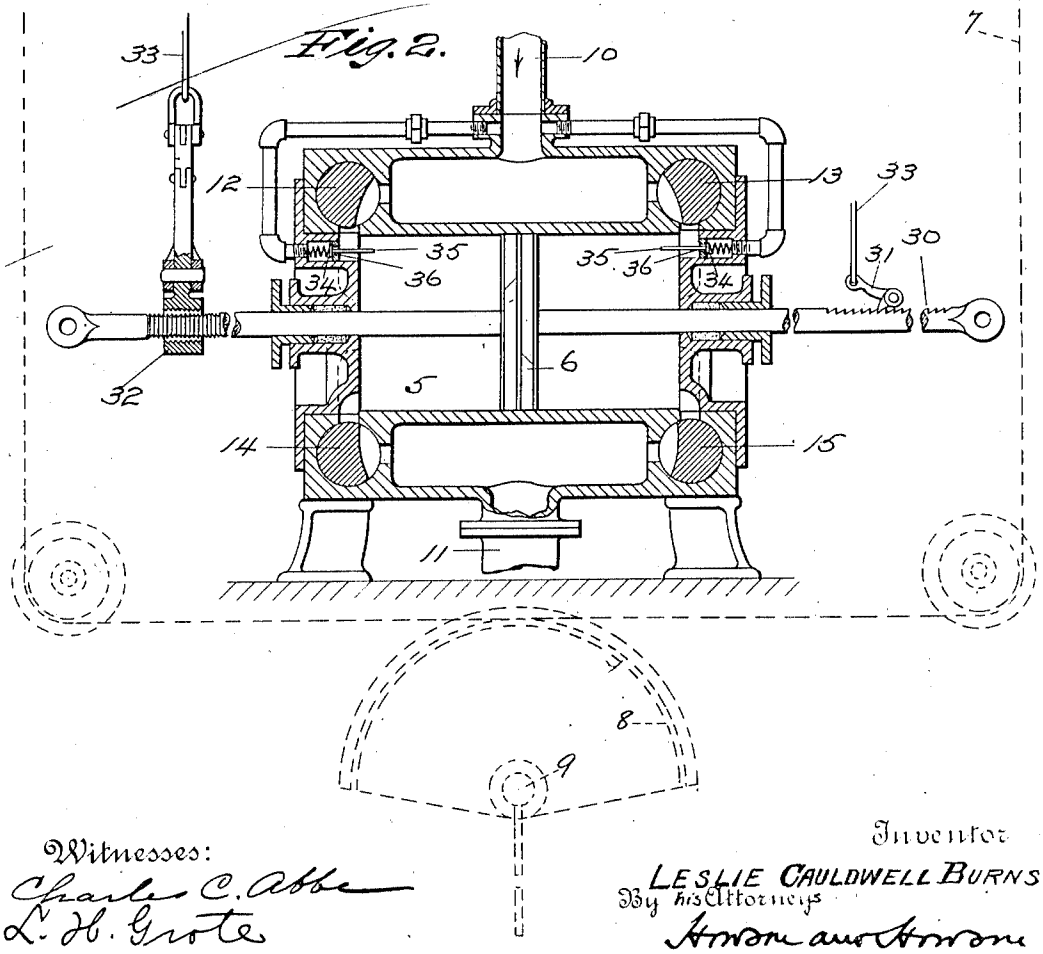

Witnesses:

Charles C. Abbe

L. H. Grote

Inventor

LESLIE CAULDWELL BURNS

By his Attorneys

Howson and Howson

UNITED STATES PATENT OFFICE.

LESLIE CAULDWELL BURNS, OF UNION HILL, NEW JERSEY, ASSIGNOR OF ONE-HALF TO CYRUS J. WALTERS BURNS, OF NEW BRUNSWICK, NEW JERSEY.

MARINE STEERING-GEAR.

1,073,954. Specification of Letters Patent. Patented Sept. 23, 1913.

Application filed August 29, 1912. Serial No. 717,784.

To all whom it may concern:

Be it known that I, LESLIE CAULDWELL BURNS, a citizen of the United States of America, and residing at Union Hill, in the county of Hudson and State of New Jersey, have invented a certain new and useful Improvement in Marine Steering-Gear, of which the following is a specification.

The present invention relates to steering gear and particularly to a power operated gear, the object of my invention being to provide a simple, pressure fluid driven apparatus for operating the tiller, which may be easily controlled from the pilot room.

In the accompanying drawing, Figure 1 is a side elevation of an apparatus embodying my invention in one form, with a diagrammatic connector to the tiller; and Fig. 2 is a vertical section through the pressure cylinder.

In the form shown, the present apparatus is particularly adapted for operation by steam pressure. The power cylinder 5 may be of ordinary type for steam pressure, and is provided with a piston 6, the rod of which extends through both heads of the cylinder and is connected at opposite ends through a suitable harness 7 of ropes, chains, rods, etc. and any suitable multiplying gear, if desired, to the tiller 8 of the rudder stem 9. Steam is led into the cylinder through the port 10 and exhausted through outlet port 11. Two valves 12 and 13 control the admission of the steam to the piston chamber and corresponding valves 14—15 control the exhaust.

The four valves are interconnected through links 16, 17, 18 and 19, pivoted in pairs at 20 and 21 on opposite sides of the axis 22 of a suitable oscillating member, such as bevel pinion 23. The latter receives its motion, by any desired operative connection, from a manually controlled member in the pilot-chamber, for example, from a common steering hand-wheel 24, which transmits its motion through rod 26 and bevel gear 27, to the pinion 23. Any suitable means, such as spring arms 28 embracing a stud 29 on the pinion 23, tend to return the latter to normal position after deflection.

In normal position, the inlet valves 12 and 13 are both open so that the steam is freely admitted to the opposite faces of the piston 6, while the outlet valves 14 and 15 are both closed. Should it be desired to move the piston to the right, the hand wheel is operated to rotate the pinion 23 clockwise. This rotates the four valves on their respective axes in such manner as to open further the valve 12, simultaneously closing valve 13. At the same time valve 14, while rotated, remains closed, whereas 15 opens. Steam is thus cut off from the portion of the chamber to the right of the piston 6 and this portion exhausted, while steam is fully admitted to the left hand face of the piston, with the result that the piston travels toward the right hand end of the piston cylinder and actuates the tiller through the harness 7.

As soon as the desired course is set, the hand wheel 24 is released, whereupon the spring 28 returns the valves to normal position admitting steam to both sides of the piston 6, and closing the exhaust 15. The piston 6 then returns to mid-position under the influence of the water pressure against the rudder acting through the harness 7.

Under ordinary circumstances, the position of the rudder will be shown to the helmsman by an indicator of well known character. Should it be desired to lock the rudder in any angular position, this can readily be accomplished by any suitable gripping device engaging the piston rod. For simplicity of illustration I have shown a ratchet 30 formed in each end of the piston rod beyond the portion which passes through the stuffing box and engaged by a pawl 31 (or gripping jaws 32, as illustrated on the left hand side of the cylinder) which may be controlled by the helmsman through a lever rod 33. Obviously this mechanism is merely illustrative of the invention which contemplates any suitable device for gripping the piston rod so as to lock the rudder in the position to which it has been shifted by the piston 6.

While under ordinary circumstances the piston 6 will be moved at relatively slow speed toward the end of the cylinder, it is advisable to provide cushioning means to prevent injury to the piston in case it should be forced suddenly into end position, as for example when in rough weather the rudder is lifted clear out of the water. For such purpose, I arrange in each end of the cylinder a valve 34 with stem 35 projecting into the piston chamber and normally closing a passage 36 leading to the steam inlet

or other convenient point in advance of the valves 12 and 13. Should the piston advance far enough to press the projecting valve stem 35, the valve 34 is opened and steam admitted which forms a cushion preventing injury to the piston.

The apparatus shown is to be regarded merely as an exemplary embodiment of my invention.

I claim as my invention:—

1. A motor for actuating steering gear of the character described, comprising a fluid pressure cylinder, a piston working therein, a piston rod extending beyond each end of the cylinder to afford means for an operative connection to a rudder, inlet and outlet valves opening to each end of the piston cylinder, and a geared disk, connecting rods therefrom to each of said valves and a manually controlled pinion for rotating said disk to simultaneously actuate said valves, substantially as described.

2. A motor for actuating steering gear of the character described, comprising a fluid pressure cylinder, a piston working therein, a piston rod extending beyond each end of the cylinder to afford means for an operative connection to the rudder, inlet and outlet valves opening to each end of the piston cylinder, said inlet valves being normally in the open position to admit fluid to the opposite faces of the piston and said outlet valves in normal position being both closed, in combination with a geared disk, connecting rods therefrom to each of said valves and a manually controlled pinion for rotating said disk to simultaneously close the inlet valve and open the exhaust valve on one side of the piston while maintaining the exhaust valve closed and the inlet valve open on the opposite side of the piston, substantially as described.

3. A motor for actuating steering gear of the character described, comprising a fluid pressure cylinder, a piston working therein, a piston rod extending beyond each end of the cylinder to afford means for an operative connection to a rudder, inlet and outlet valves opening to each end of the piston cylinder, said inlet valves being normally in the open position to admit fluid to the opposite faces of the piston and said outlet valves in normal position being both closed, in combination with manually controlled means for simultaneously closing the inlet valve and opening the exhaust valve on one side of the piston while maintaining the exhaust valve closed and the inlet valve open on the opposite side of the piston, together with spring means for automatically returning said valves to normal position upon release of the manual controlling means, substantially as described.

4. A motor for actuating steering gear of the character described, comprising a fluid pressure cylinder, a piston working therein, a piston rod extending beyond each end of the cylinder to afford means for an operative connection to the rudder, inlet and outlet valves opening to each end of the piston cylinder, said inlet valves being normally in the open position to admit fluid to the opposite faces of the piston and said outlet valves in normal position, being both closed, in combination with an oscillating member to which said valves are pivotally connected and manually controlled means for rotating said oscillating member on its pivot, together with spring means engaging said oscillating member for automatically returning the same to normal position upon release of the hand controlling means, substantially as described.

5. A motor for actuating steering gear of the character described, comprising a fluid pressure cylinder, a piston working therein, a piston rod extending beyond each end of the cylinder to afford means for an operative connection to a rudder, valve means for distributing the pressure fluid to opposite faces of the piston and means independent of the valves for holding said piston rod in any desired position while the valves are permitted to return to normal position, for the purpose described.

6. A motor for actuating steering gear of the character described, comprising a fluid pressure cylinder, a piston working therein, a piston rod extending beyond each end of the cylinder to afford means for an operative connection to the rudder, valve means for distributing the pressure fluid to opposite faces of said piston, together with means independent of the valves for engaging said piston rod to hold the same in any desired position while the valves are permitted to return to normal position, for the purpose described.

In testimony whereof I have signed my name to this specification, in the presence of two subscribing witnesses.

LESLIE CAULDWELL BURNS.

Witnesses:
L. H. GROTE,
WILLIAM ABBE.