(12) INTERNATIONAL APPLICATION PUBLISHED UNDER THE PATENT COOPERATION TREATY (PCT)

(19) World Intellectual Property Organization
International Bureau

(43) International Publication Date
08 November 2018 (08.11.2018)

WIPO | PCT

(10) International Publication Number
WO 2018/201178 A1

(51) International Patent Classification:
A47J 31/44 (2006.01) *A01J 11/04* (2006.01)
A47J 43/09 (2006.01) *B01F 7/16* (2006.01)

(21) International Application Number:
PCT/AU2017/050409

(22) International Filing Date:
04 May 2017 (04.05.2017)

(25) Filing Language: English

(26) Publication Language: English

(71) Applicant: **AIRFLO DISTRIBUTORS PTY LTD** [AU/AU]; 45 Lakeside Drive, Broadmeadows, Victoria 3047 (AU).

(72) Inventor: **DELEO, Joseph**; 45 Lakeside Drive, Broadmeadows, Victoria 3047 (AU).

(74) Agent: **WULFF, Steven**; K&L Gates, Level 25 South Tower, 525 Collins Street, Melbourne, Victoria 3000 (AU).

(81) Designated States *(unless otherwise indicated, for every kind of national protection available)*: AE, AG, AL, AM, AO, AT, AU, AZ, BA, BB, BG, BH, BN, BR, BW, BY, BZ, CA, CH, CL, CN, CO, CR, CU, CZ, DE, DJ, DK, DM, DO, DZ, EC, EE, EG, ES, FI, GB, GD, GE, GH, GM, GT, HN, HR, HU, ID, IL, IN, IR, IS, JP, KE, KG, KH, KN, KP, KR, KW, KZ, LA, LC, LK, LR, LS, LU, LY, MA, MD, ME, MG, MK, MN, MW, MX, MY, MZ, NA, NG, NI, NO, NZ, OM, PA, PE, PG, PH, PL, PT, QA, RO, RS, RU, RW, SA, SC, SD, SE, SG, SK, SL, SM, ST, SV, SY, TH, TJ, TM, TN, TR, TT, TZ, UA, UG, US, UZ, VC, VN, ZA, ZM, ZW.

(84) Designated States *(unless otherwise indicated, for every kind of regional protection available)*: ARIPO (BW, GH, GM, KE, LR, LS, MW, MZ, NA, RW, SD, SL, ST, SZ, TZ, UG, ZM, ZW), Eurasian (AM, AZ, BY, KG, KZ, RU, TJ, TM), European (AL, AT, BE, BG, CH, CY, CZ, DE, DK, EE, ES, FI, FR, GB, GR, HR, HU, IE, IS, IT, LT, LU, LV, MC, MK, MT, NL, NO, PL, PT, RO, RS, SE, SI, SK, SM, TR), OAPI (BF, BJ, CF, CG, CI, CM, GA, GN, GQ, GW, KM, ML, MR, NE, SN, TD, TG).

Published:
— *with international search report (Art. 21(3))*

(54) Title: APPARATUS AND METHOD FOR STEAMING LIQUIDS

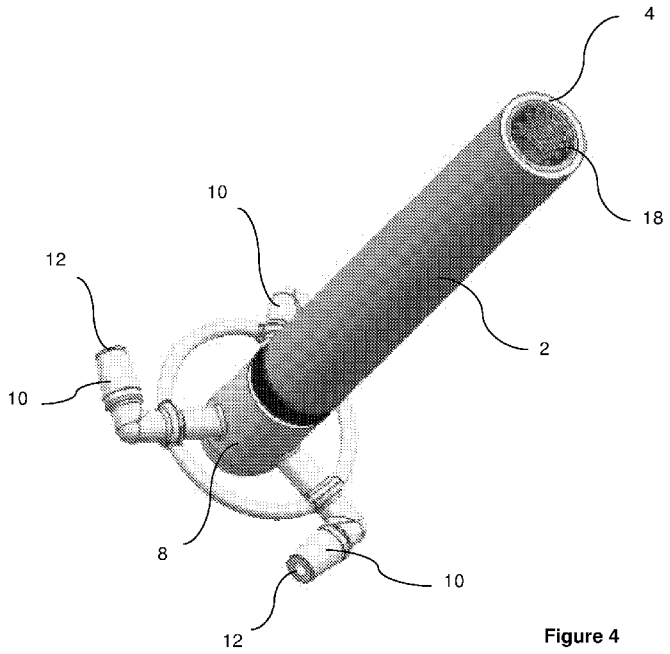

Figure 4

(57) Abstract: Apparatus for mixing a liquid comprising: a hollow tube configured to allow passage of fluid from an inlet end to an outlet end; a rotatable head in fluid connection with the outlet end of the hollow tube; and at least one nozzle in fluid connection with the rotatable head and positioned such that fluid exiting an outlet of the nozzle drives the rotatable head to rotate about a longitudinal axis of the hollow tube.

WO 2018/201178 A1

APPARATUS AND METHOD FOR STEAMING LIQUIDS

Field

[0001] The present invention relates to apparatus and methods for steaming liquids, in particular beverages.

Background

[0002] Creating specialty beverages such as lattes, cappuccinos and hot chocolates requires milk to be frothed to produce a stable and creamy texture. One method of frothing milk involves mixing it with a whisk or other mixing device to aerate the milk. The motor-driven whisk needs to be powered separately from the home coffee machine. Some conventional milk frothers include a heater to simultaneously heat the milk while it is being whisked, otherwise the milk has to be heated in a separate step. This method of frothing milk without steam is more accessible to the average home user but creates a lower quality texture compared to milk frothed using a conventional steam wand

[0003] Milk steamed using a steam wand (as typically found on professional espresso machines) has a more uniform, silky texture known as "microfoam" and sweeter, creamier flavour, since pressurised steam more evenly heats sugars and breaks down fat in the milk. However, this method of steaming milk requires skill and experience. For example, the steam wand needs to be held at a particular angle relative to the container of milk and at a particular depth relative to the surface of the milk, in order to create and maintain a vortex in the milk, to thoroughly and continuously mix steam into the milk. Inexperienced users will typically create bubbles that are too large and unstable.

[0004] In this context, there is a need for improved apparatus and methods for steaming liquids, in particular for frothing milk.

Summary

[0005] According to the present invention, there is provided apparatus for mixing a liquid comprising:

a hollow tube configured to allow passage of fluid from an inlet end to an outlet end;

a rotatable head in fluid connection with the outlet end of the hollow tube; and

at least one nozzle in fluid connection with the rotatable head and positioned such that fluid exiting an outlet of the nozzle drives the rotatable head to rotate about a longitudinal axis of the hollow tube.

[0006] The apparatus may comprise three nozzles spaced in radial symmetry about the longitudinal axis of the hollow tube.

[0007] The rotatable head may further comprise a stirring element.

[0008] The stirring element may comprise an annular spring, one or more paddles, one or more whisks, or a combination thereof.

[0009] The fluid may be pressurised steam.

[0010] The inlet end of the hollow tube may be sized and configured to be connected to a steam wand of a coffee machine.

[0011] The rotatable head may further comprises one or more blades.

[0012] According to a second aspect of the present invention, there is provided a method of heating a liquid using the apparatus described.

[0013] According to a third aspect of the present invention, there is provided a method of steaming and/or frothing milk using the apparatus described.

[0014] According to a fourth aspect of the present invention, there is provided a method of blending a soft food substance while mixing the blended liquid, using the apparatus described.

[0015] According to a fifth aspect of the present invention, there is provided a coffee machine comprising:

a steam generator;

a hollow tube attached to the steam generator and configured to allow passage of steam to an outlet end of the tube;

a rotatable head in fluid connection with the outlet end of the hollow tube; and

at least one nozzle in fluid connection with the rotatable head and positioned such that steam exiting an outlet of the nozzle drives the rotatable head to rotate about a longitudinal axis of the hollow tube.

[0016] According to a sixth aspect of the present invention, there is provided a milk frother comprising:

a pressurisable vessel configured for generating steam;

a hollow tube attached to the pressurisable vessel and configured to allow passage of steam from the vessel to an outlet end of the tube;

a rotatable head in fluid connection with the outlet end of the hollow tube; and

at least one nozzle in fluid connection with the rotatable head and positioned such that steam exiting an outlet of the nozzle drives the rotatable head to rotate about a longitudinal axis of the hollow tube.

Brief Description of Drawings

[0017] Embodiments of the invention will now be described by way of example only with reference to the accompanying drawings, in which:

Figure 1 is a perspective view of an apparatus for mixing a liquid according to one embodiment;

Figure 2 is a bottom view of an apparatus for mixing a liquid according to another embodiment;

Figure 3 is a cross-sectional view of the apparatus of Figure 2, taken from line A-A; and

Figure 4 is a perspective view of the apparatus of Figure 2.

Description of Embodiments

[0018] Referring to the drawings, apparatus 100 for mixing a liquid according to preferred embodiments comprises a hollow tube 2 configured to allow passage of fluid from an inlet end 4 to an outlet end 6 of the tube, a rotatable head 8 in fluid connection with the outlet end 6 of the tube 2, and at least one nozzle 10 in fluid connection with the rotatable head 8. The nozzle 10 is positioned such that fluid exiting the nozzle outlet 12 drives the rotatable head 8 to rotate about a longitudinal axis 13 of the hollow tube. In preferred embodiments, the fluid exiting the nozzle outlet 12 follows a flow path that is radially spaced from the rotatable head and substantially orthogonal to the longitudinal axis 13, in order to spin the nozzle 10 around the longitudinal axis 13.

[0019] The apparatus 100 is therefore powered by steam or other pressurised fluid, eliminating the need for a motor for drive the rotatable head 8. When used to steam milk

for a beverage, steam flowing through apparatus 100 rotates the rotatable head 8 to create and maintain a vortex within the milk, resulting in uniform, fine-textured "microfoam", similar in effect to professionally steamed milk produced with a steam wand. In this way, the untrained user may easily create café-quality specialty beverages at home.

[0020] In some embodiments, rotatable head 8 may be held between hollow tube 2 and a non-rotatable end cap 16. The end cap 16 may function to space the nozzles 10 a predetermined distance away from the bottom of the container of milk, so that the vortex is formed at the ideal depth below the surface of the milk. In other embodiments, the end cap 16 is integral with rotatable head 8.

[0021] In one embodiment, the apparatus 100 comprises three nozzles 10, preferably spaced in radial symmetry about the longitudinal axis 13 of the hollow tube. Fewer or more nozzles may be provided. Apparatus 100 is preferably constructed of a heat-resistant and food-grade material, such as stainless steel or heat-resistant plastics.

[0022] The rotatable head 8 may further comprise a stirring element, such as an annular spring 14, one or more paddles, one or more whisks, or a combination thereof. As shown in Figure 1, the spring 14 may comprise a coiled spring in an annular arrangement between the nozzles 10. The spring 14 may further improve or speed up mixing/frothing of the liquid. However, as shown in the embodiment of Figures 2 to 4, the rotatable head 8 need not comprise a stirring element in cases where the rotating nozzles 10 themselves can provide sufficient mixing ability.

[0023] In preferred embodiments, the fluid that is input into apparatus 100 is pressurised steam. Apparatus 100 may be attached to a steam generator which outputs steam at a sufficient pressure to rotate the rotatable head 8 at a sufficient speed for mixing and/or frothing the liquid. For example, the inlet end 4 of the hollow tube 2 may be sized and configured to be connected to a steam wand of a coffee machine (not shown). In preferred embodiments, apparatus 100 may be installed or retrofitted to a steam wand or other steam-generating device on the coffee machine, via for example, threaded connector 18. Since apparatus 100 is steam-powered, there is no need to drive a separate motor. Further, since the liquid is simultaneously heated by the steam, there is no need for a separate heating element. Apparatus 100 therefore provides a compact

and energy-efficient frothing device that may be easily integrated with existing coffee machine designs.

[0024] Fluid preferably exits through nozzles 10 at sufficient pressure such that the liquid to be mixed does not enter into the nozzles. Further, steam passing through hollow tube 2, rotatable head 8 and nozzles 10 clears and sterilises the internal cavities of these components. Accordingly, apparatus 100 provides a hygienic and easy-to-clean mixing and/or frothing device.

[0025] In other embodiments, the rotatable head 8 may alternatively or additionally comprise one or more blades, so that apparatus 100 may be used to heat and blend soft foods (eg solid chocolate for a hot chocolate drink, soft foods to make baby food, protein shakes, soups, etc). In some embodiments, rotatable head 8 may be detachable from hollow tube 2, for swapping between different rotatable heads.

[0026] In some embodiments, other types of pressurised fluid such as compressed air, unheated water, pressurised carbon dioxide, etc may be input into apparatus 100 to drive the rotating head 8.

[0027] The present invention may alternatively be embodied in a standalone milk steamer (not shown). The milk frother may comprise a pressurisable vessel configured for generating steam eg by heating water on a stove, a hollow tube attached to the pressurisable vessel and configured to allow passage of steam from the vessel to an outlet end of the tube, a rotatable head in fluid connection with the outlet end of the hollow tube and at least one nozzle in fluid connection with the rotatable head and positioned such that steam exiting an outlet of the nozzle drives the rotatable head to rotate about a longitudinal axis of the hollow tube. Alternatively, apparatus 100 may be installed or retrofitted to a standalone steamer such as a stovetop milk frothing device.

[0028] In some embodiments, the apparatus 100 or the standalone milk steamer (not shown) may comprise a thermometer to allow the user to easily monitor the temperature of the milk being steamed.

[0029] Embodiments of the present invention provide apparatus and methods for steaming liquids, which are useful for enabling the untrained user to froth milk and create specialty beverages at home. Embodiments of the present invention additionally or alternatively provide apparatus for steaming liquids that may be integrated with and

powered by steam generators on coffee machines, resulting in a compact, energy-efficient design.

[0030] For the purpose of this specification, the word “comprising” means “including but not limited to”, and the word "comprises" has a corresponding meaning.

[0031] The above embodiments have been described by way of example only and modifications are possible within the scope of the claims that follow.

Claims

1. Apparatus for mixing a liquid comprising:

a hollow tube configured to allow passage of fluid from an inlet end to an outlet end;

a rotatable head in fluid connection with the outlet end of the hollow tube; and

at least one nozzle in fluid connection with the rotatable head and positioned such that fluid exiting an outlet of the nozzle drives the rotatable head to rotate about a longitudinal axis of the hollow tube.

2. The apparatus of claim 1, comprising three nozzles spaced in radial symmetry about the longitudinal axis of the hollow tube.

3. The apparatus of claim 1 or 2, wherein the rotatable head further comprises a stirring element.

4. The apparatus of claim 3, wherein the stirring element comprises an annular spring, one or more paddles, one or more whisks, or a combination thereof.

5. The apparatus of any one of the preceding claims, wherein the fluid is pressurised steam.

6. The apparatus of claim 5, wherein the inlet end of the hollow tube is sized and configured to be connected to a steam wand of a coffee machine.

7. The apparatus of any one of the preceding claims, wherein the rotatable head further comprises one or more blades.

8. A method of heating a liquid using the apparatus of claim 5 or 6.

9. A method of steaming and/or frothing milk using the apparatus of claim 5 or 6.

10. A method of blending a soft food substance while mixing the blended liquid, using the apparatus of claim 7.

11. A coffee machine comprising:

a steam generator;

a hollow tube attached to the steam generator and configured to allow passage of steam to an outlet end of the tube;

a rotatable head in fluid connection with the outlet end of the hollow tube; and

at least one nozzle in fluid connection with the rotatable head and positioned such that steam exiting an outlet of the nozzle drives the rotatable head to rotate about a longitudinal axis of the hollow tube.

12. A milk frother comprising:

a pressurisable vessel configured for generating steam;

a hollow tube attached to the pressurisable vessel and configured to allow passage of steam from the vessel to an outlet end of the tube;

a rotatable head in fluid connection with the outlet end of the hollow tube; and

at least one nozzle in fluid connection with the rotatable head and positioned such that steam exiting an outlet of the nozzle drives the rotatable head to rotate about a longitudinal axis of the hollow tube.

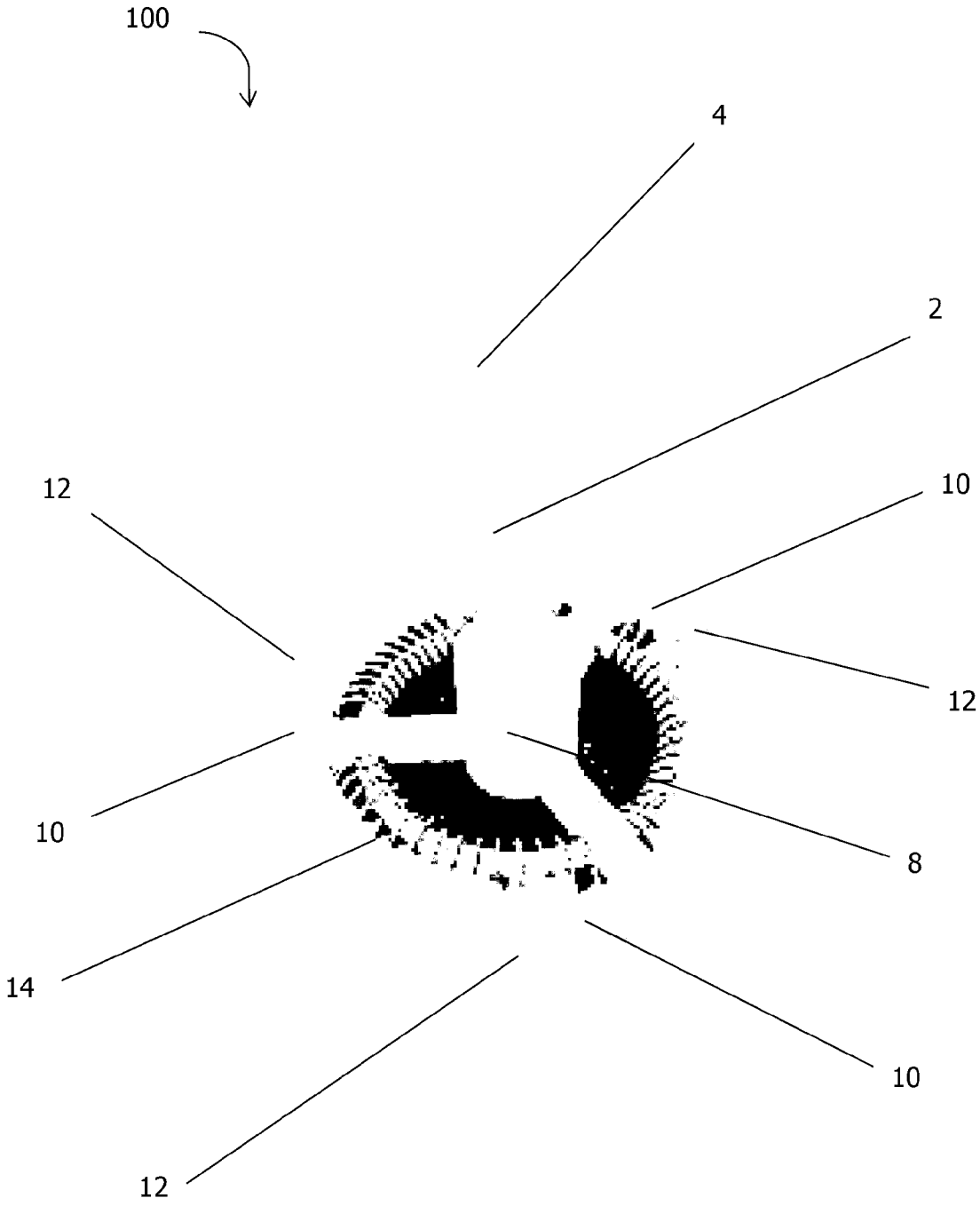

Figure 1

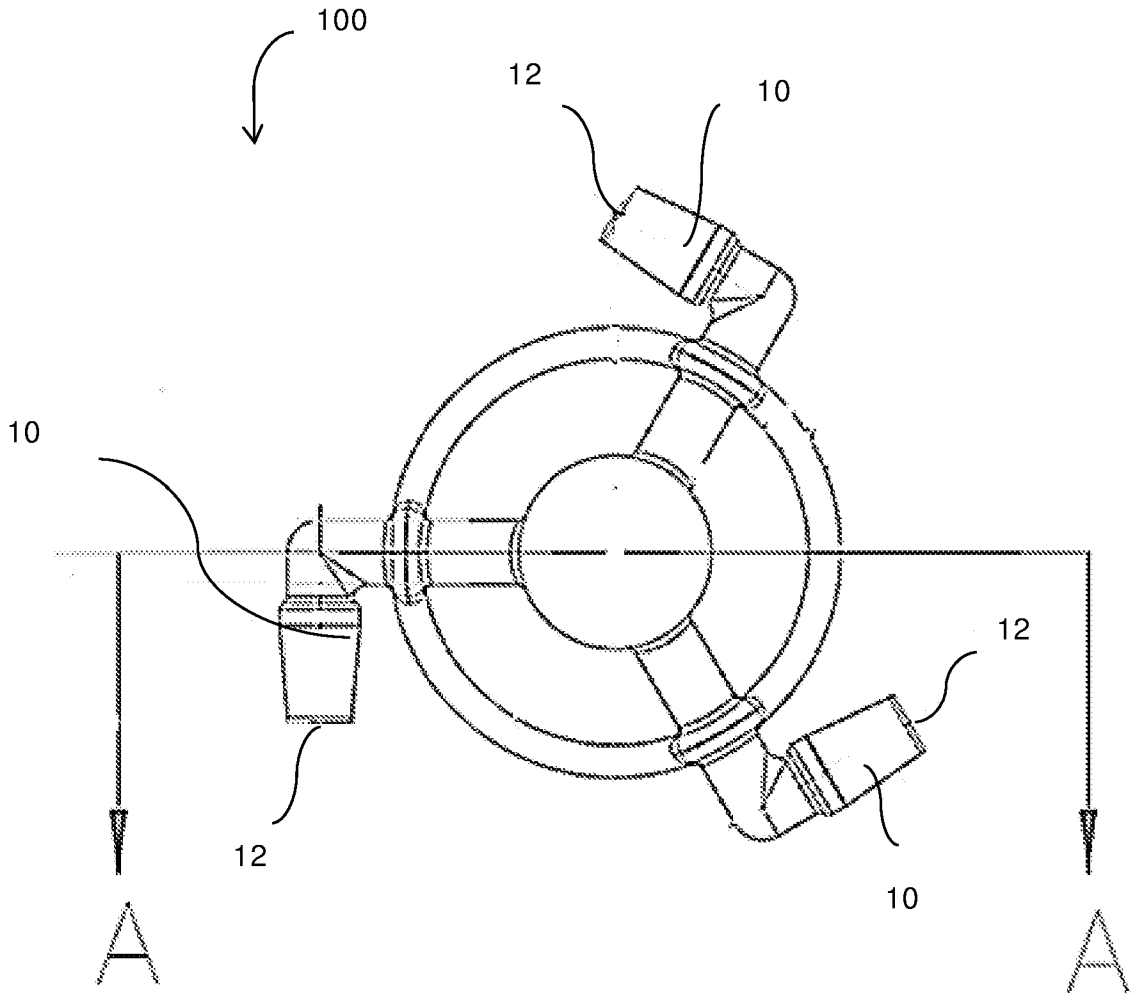

Figure 2

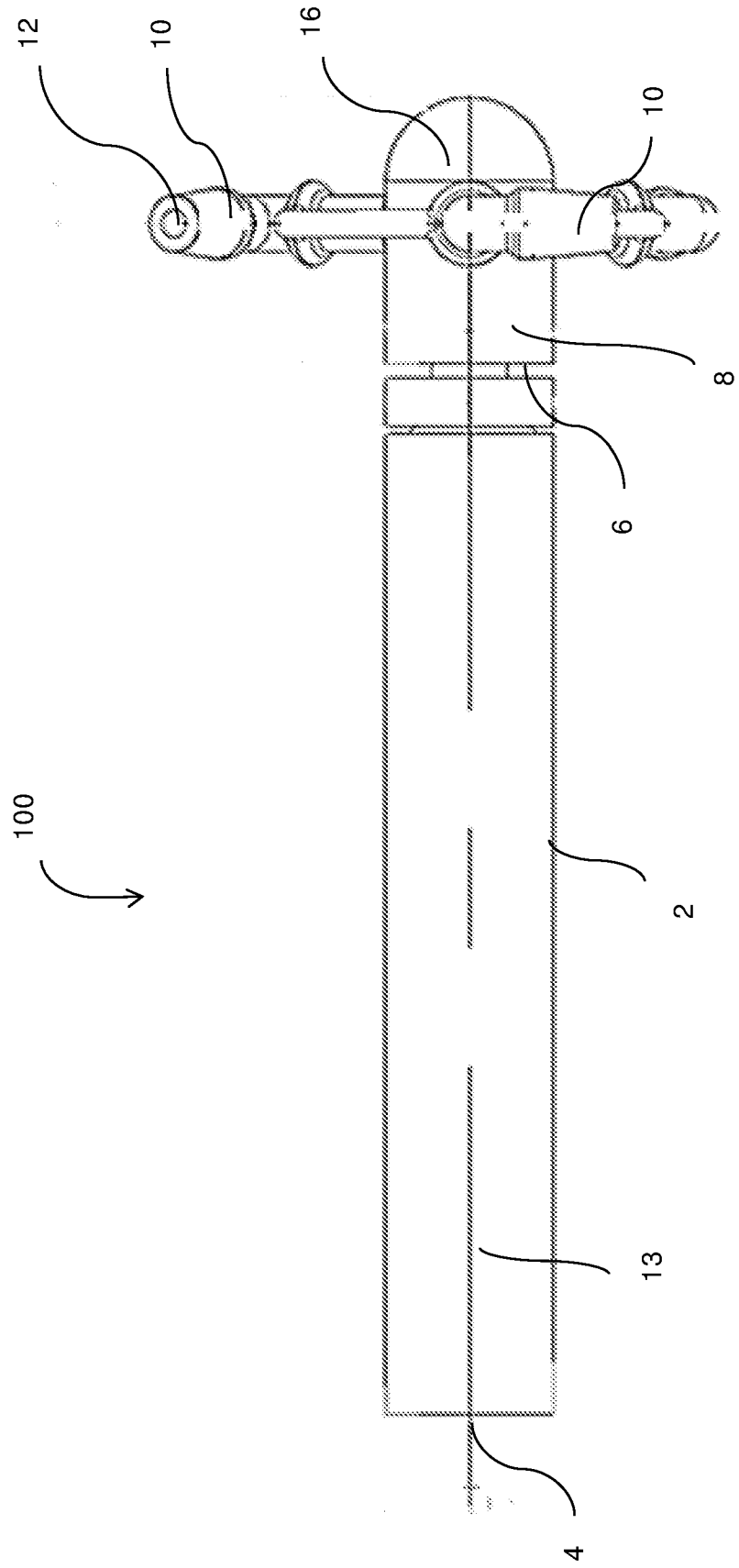

Figure 3

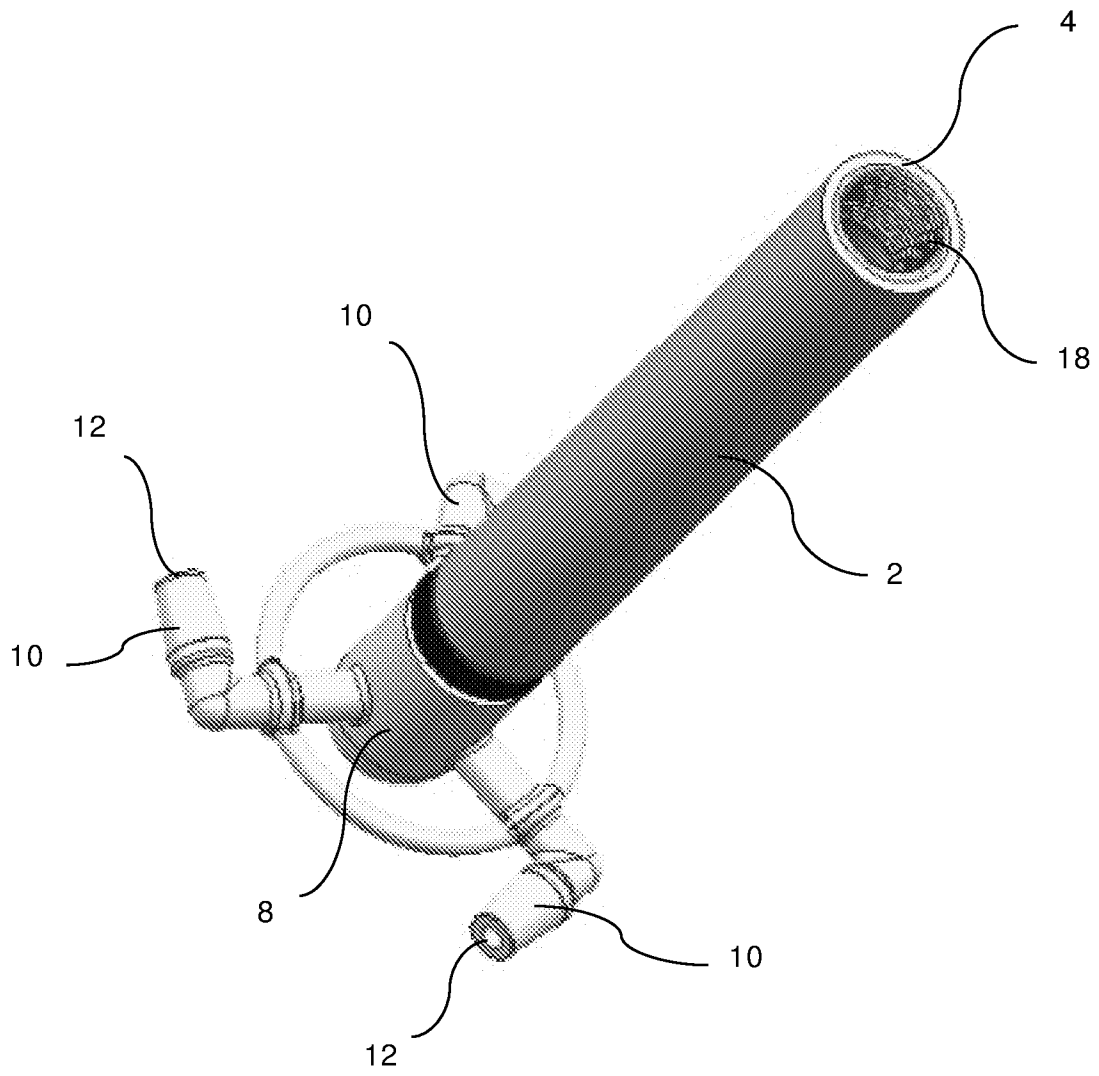

Figure 4

INTERNATIONAL SEARCH REPORT

International application No.
PCT/AU2017/050409

A. CLASSIFICATION OF SUBJECT MATTER

A47J 31/44 (2006.01) A47J 43/09 (2006.01) A01J 11/04 (2006.01) B01F 7/16 (2006.01)

According to International Patent Classification (IPC) or to both national classification and IPC

B. FIELDS SEARCHED

Minimum documentation searched (classification system followed by classification symbols)

Documentation searched other than minimum documentation to the extent that such documents are included in the fields searched

Electronic data base consulted during the international search (name of data base and, where practicable, search terms used)

Databases: Espacenet, AUSPAT, PATENW. IPCs/CPCs: A47J31/4489, A47J31/44, A01J11/04, B01F7/00, B01F2215/0006, A47J43/127, A47J43/09. Keywords: ROTATE, SWIVEL, SPIN, SWIRL, STIR, NOZZLE, HEAD, OUTLET, FROTHER, PADDLE, MIX, STEAM, WAND, SPOUT, THREE, TRIPLE, PLURAL, MULTIPLE and similar terms.

Applicant/Inventor name search carried out in ESPACENET, AUSPAT and internal databases provided by IP Australia.

C. DOCUMENTS CONSIDERED TO BE RELEVANT

Category*	Citation of document, with indication, where appropriate, of the relevant passages	Relevant to claim No.
	Documents are listed in the continuation of Box C	

[X] Further documents are listed in the continuation of Box C [X] See patent family annex

* Special categories of cited documents:

"A" document defining the general state of the art which is not considered to be of particular relevance

"E" earlier application or patent but published on or after the international filing date

"L" document which may throw doubts on priority claim(s) or which is cited to establish the publication date of another citation or other special reason (as specified)

"O" document referring to an oral disclosure, use, exhibition or other means

"P" document published prior to the international filing date but later than the priority date claimed

"T" later document published after the international filing date or priority date and not in conflict with the application but cited to understand the principle or theory underlying the invention

"X" document of particular relevance; the claimed invention cannot be considered novel or cannot be considered to involve an inventive step when the document is taken alone

"Y" document of particular relevance; the claimed invention cannot be considered to involve an inventive step when the document is combined with one or more other such documents, such combination being obvious to a person skilled in the art

"&" document member of the same patent family

Date of the actual completion of the international search	Date of mailing of the international search report
29 June 2017	29 June 2017
Name and mailing address of the ISA/AU	**Authorised officer**
AUSTRALIAN PATENT OFFICE PO BOX 200, WODEN ACT 2606, AUSTRALIA Email address: pct@ipaustralia.gov.au	Tom Banks AUSTRALIAN PATENT OFFICE (ISO 9001 Quality Certified Service) Telephone No. 0262832742

INTERNATIONAL SEARCH REPORT C (Continuation). DOCUMENTS CONSIDERED TO BE RELEVANT		International application No. **PCT/AU2017/050409**
Category*	Citation of document, with indication, where appropriate, of the relevant passages	Relevant to claim No.
X	EP 1197175 A1 (TCHIBO FRISCH-ROEST-KAFFEE GMBH) 17 April 2002, English translation obtained from Google Patents Title, Fig 2, para 0007, 0017, claim 1,	1-12
X	CA 2048631 A1 (BRAUN AKTIENGESELLSCHAFT) 14 September 1990 Abstract, Figs 1-11, pg 3, 6,	1-12
X	US 2005/0259508 A1 (ROHDE) 24 November 2005 Figs 1-6, para 0002, 0006, 0024, 0025, 0028	1, 3-12
X	WO 2007/017342 A1 (ARIETE S.P.A) 15 February 2007 Abstract, Figs 1-4, pg 2, lines 28-29, pg 3, lines 1-3, lines 8-12, lines 16-22, pg 4, lines 2-6	1-10, 12
X	WO 2006/072484 A1 (BSH BOSCH UND SIEMENS HAUSGERATE GMBH) 13 July 2006, English translation obtained from Google Patents Title, Abstract, Figs 1-2, Description - second paragraph	1, 3-12
A	NL 1019534 C1 (BOB ANDRIESSE) 13 June 2003, English translation obtained from Google Patents Figs 1-3, Abstract, Pg 2, line 26 to Pg 3, line 15	1-12

INTERNATIONAL SEARCH REPORT Information on patent family members	International application No. **PCT/AU2017/050409**

This Annex lists known patent family members relating to the patent documents cited in the above-mentioned international search report. The Australian Patent Office is in no way liable for these particulars which are merely given for the purpose of information.

Patent Document/s Cited in Search Report		**Patent Family Member/s**	
Publication Number	**Publication Date**	**Publication Number**	**Publication Date**
EP 1197175 A1	17 April 2002	EP 1197175 A1	17 Apr 2002
		DE 10050719 A1	25 Apr 2002
CA 2048631 A1	14 September 1990	CA 2048631 A1	14 Sep 1990
		EP 0520980 A1	07 Jan 1993
		IT 1228370 B	14 Jun 1991
		JP H04501970 A	09 Apr 1992
		JP H0579323 B2	02 Nov 1993
		WO 9010411 A1	20 Sep 1990
US 2005/0259508 A1	24 November 2005	US 2005259508 A1	24 Nov 2005
		US 7264232 B2	04 Sep 2007
		BR PI0501719 A	10 Jan 2006
		BR PI0501719 B1	03 Nov 2015
		CA 2507208 A1	19 Nov 2005
		DE 102004024721 A1	15 Dec 2005
		EP 1597992 A1	23 Nov 2005
		EP 1597992 B1	02 Sep 2009
		JP 2005329241 A	02 Dec 2005
		JP 4808993 B2	02 Nov 2011
WO 2007/017342 A1	15 February 2007	WO 2007017342 A1	15 Feb 2007
		CN 101257821 A	03 Sep 2008
		IT GE20050064 A1	06 Feb 2007
WO 2006/072484 A1	13 July 2006	WO 2006072484 A1	13 Jul 2006
		CN 101106928 A	16 Jan 2008
		DE 102004063285 A1	13 Jul 2006
		EP 1833338 A1	19 Sep 2007
		EP 1833338 B1	25 Feb 2009
NL 1019534 C1	13 June 2003		

End of Annex

Due to data integration issues this family listing may not include 10 digit Australian applications filed since May 2001.