March 28, 1950 H. RADFORD 2,502,061

VEHICLE SEAT

Filed Aug. 7, 1947

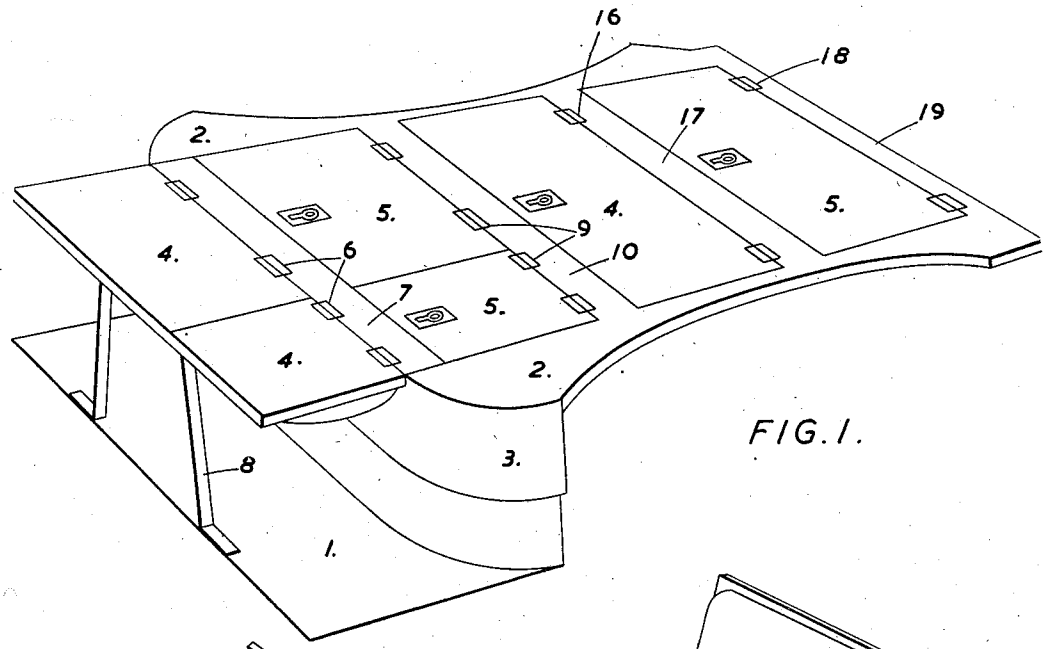

FIG. 1.

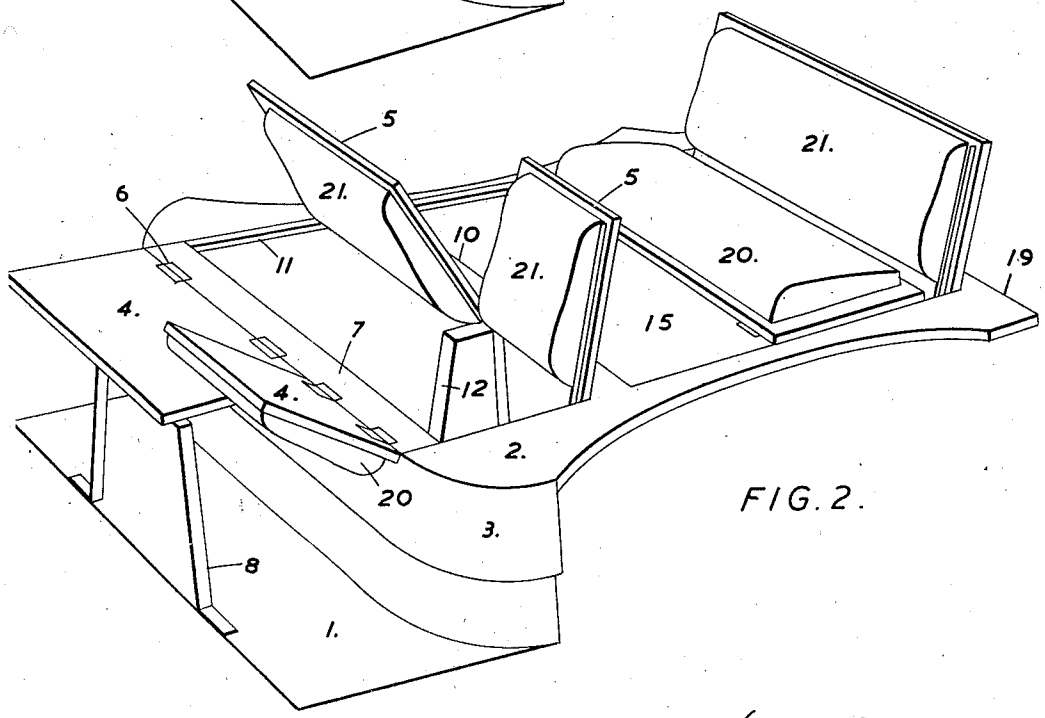

FIG. 2.

Harold Radford
INVENTOR
by Ernest L. Mechlin
his ATTORNEY

Patented Mar. 28, 1950 2,502,061

UNITED STATES PATENT OFFICE

2,502,061

VEHICLE SEAT

Harold Radford, London, England, assignor to Harold Radford & Company Limited, London, England, a body corporate of Great Britain

Application August 7, 1947, Serial No. 767,191
In Great Britain May 14, 1947

1 Claim. (Cl. 296—66)

1

This invention relates to vehicle seats with more especial reference to seating arrangements for dual purpose, station wagon or utility bodied motor vehicles convertible for passenger carrying or for the transport of goods or livestock.

One object of the invention is to provide an improved instantly convertible arrangement affording comfortable seating on the one hand and an extended continuous flat surface on the other when goods or livestock are to be carried. Further and favourable objects will appear from the following description.

In the improved vehicle seating arrangement according to the invention, the seat squab foundation is formed with a flat underface and is pivoted at its front edge while the back squab is similarly formed with a flat rear face and is pivotally mounted at its lower edge so that when the seat squab has been swung forwardly about its pivot the back squab may be pivotally moved or folded to take its place.

In a preferred embodiment of folding seat arrangement for a dual purpose utility body, two benches or rows of seats are mounted in the decking aforementioned, each adapted to take three persons abreast.

The seat squab panels and back panels are rectangular and of equal size for each bench, those for the front bench being divided so that an individual seat may remain erected while the remainder is folded or vice versa. When the front bench is swung forwardly about its pivotal axis, it leaves a well in the deck into which the back squab may then be swung to take its place, and similarly when the seat squab of the back bench is swung forwardly it covers in the foot well and the aperture it leaves in the deck is then filled by swinging the back forwardly about its pivotal mounting, the whole arrangement when folded providing a flat load carrying surface or deck.

The seat frames may be constructed of wood, metal or other appropriate material, and the squabs may be sprung and upholstered in leather or other suitable material.

Reference will now be had to the accompanying drawings where Figs. 1 and 2 are perspective views of the preferred embodiment respectively in the folded goods carrying condition, and partly open in the process of conversion to passenger carrying.

In the drawings 1 represents the floor of the vehicle body behind the driving seat or bench and 2 is a horizontal decking of wood carried within the body and having a curved front wall 3 also of wood depending to the floor 1.

The decking 2 mounts front and rear folding

2

benches, the front bench being divided and its seats being independently foldable. Each seat or bench consists of a hinged seat squab panel or foundation 4 and a hinged back squab panel or foundation 5. The front bench seat foundations are hinged at 6 to the front edge of a transom 7 level with the decking at the top of the front wall 3 and in the folded position shown in Fig. 1 rest on a support 8 to form a horizontal continuation of the decking.

The front bench back squab foundations 5 are hinged at 9 to a transom 10 at deck level and between the transoms 7 and 10 is a rectangular well in the decking which, in the goods carrying condition shown in Fig. 1, is closed by the rectangular seat back foundations 5, the latter folding flush with the decking and resting on flanges 11.

The transom 10 is centrally supported by a metal frame 12 and behind it there is a rectangular well 15 in the decking to accommodate the legs of the rear passengers, as is clearly shown in Fig. 2.

The back bench seat squab foundation 4 is hinged at 16 to a transom 17 and, as shown in Fig. 1, folds flush with the deck to form a hatch or cover for the well 15, while in rear of the transom 17 is another rectangular well in the decking which in the folded condition of the body is closed by the back squab foundation 5 pivoted at 18 to a rear transom 19, and in the passenger carrying condition shown in Fig. 2, is covered by the back bench seat foundation 4 which is hinged at 16 in the manner aforementioned.

20 represents the seat squabs and 21 the back squabs, which in the folded position pass into the wells, so that a continuous, uninterrupted load carrying surface or deck is provided as shown in Fig. 1. On the other hand, by opening up the squab foundations 4 and 5 about their hinges, the body is instantly converted for passenger carrying.

It will be appreciated that single bench or multibench units may be produced according to the body space available and that a continuous flat load carrying surface or deck is obtained in all cases.

By the present invention an improved and convenient seating arrangement for dual purpose vehicle bodies is obtained which can be instantly converted to an extended flat load carrying deck.

What I claim is:

A seating arrangement for dual purpose station wagons of the kind defined, comprising a decking having side components and longitudinally spaced transoms extending between and flush with said side components with wells in the decking between the transoms, seat squabs

hingedly connected to alternate transoms, and back squabs hingedly connected to intermediate transoms, each of said squabs being supported in seating position entirely on the transom connected thereto, said squabs being forwardly pivotable from said seating position to a position in which they cover the wells, and support means for the squabs in said well covering position so that foundations of said squabs form with the transoms and side components of the decking a continuous flat load carrying surface, said support means being below said surface.

HAROLD RADFORD.

REFERENCES CITED

The following references are of record in the file of this patent:

UNITED STATES PATENTS

Number	Name	Date
534,019	Stratton	Feb. 12, 1895
538,842	McLean	May 7, 1895
914,334	Buff	Mar. 2, 1909
1,415,209	Troke	May 2, 1922
2,254,193	Augustine	Aug. 26, 1941