May 2, 1950 H. M. ZYWIECKA 2,506,324

COMBINED GARMENT AND REMOVABLE PANTY

Filed Nov. 10, 1947

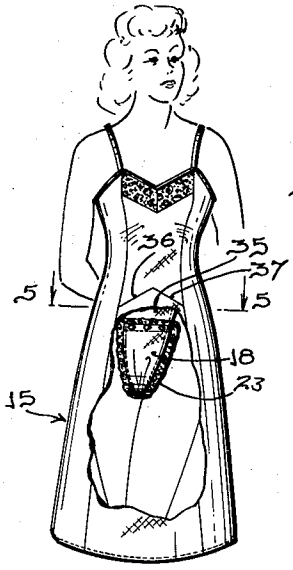


FIG. 1.

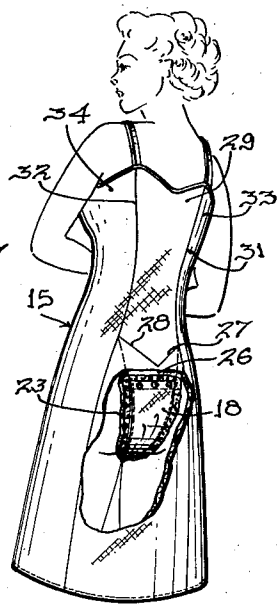


FIG. 2.

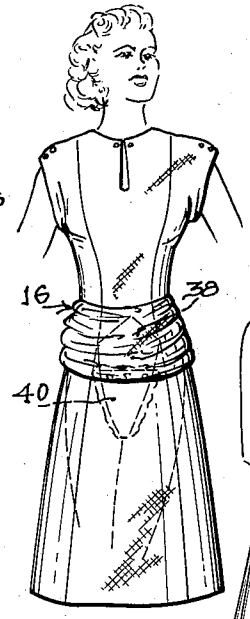


FIG. 3.

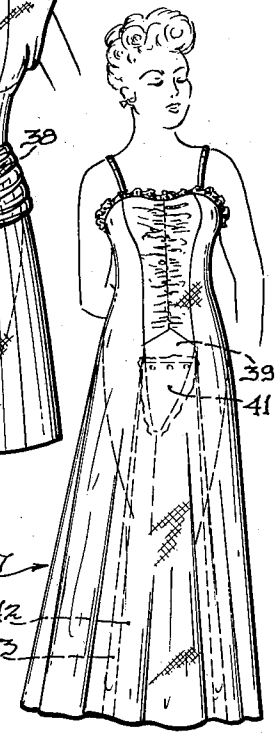


FIG. 4.

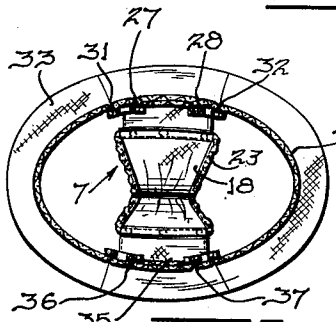


FIG. 5.

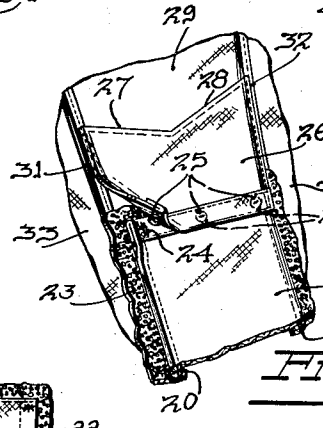


FIG. 7.

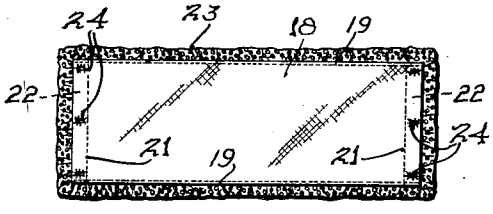


FIG. 6.

INVENTOR.
HELEN M. ZYWIECKA
BY Julian Plocheky
ATTORNEY

Patented May 2, 1950 2,506,324

# UNITED STATES PATENT OFFICE

2,506,324

## COMBINED GARMENT AND REMOVABLE PANTY

Helen M. Zywiecka, New York, N. Y.

Application November 10, 1947, Serial No. 784,981

1 Claim. (Cl. 2—73)

1

This invention relates to new and useful improvements in women's apparel, and, more particularly, provides a novel and useful combination garment one portion of which is a removable panty.

For slimming the lines of the figure when the new garment in its entirety is worn, the panty is carried by the main portion of the garment by detachable securement within and to the latter solely at the back and front thereof.

To meet this situation, and at the same time to provide a panty adapted to serve perfectly as a comfortably fitting yet adequately protective element, the same, in its preferred form, is a rectangular piece of material of somewhat greater length than width. Thereby, incidentally, there is a maximum saving of material, and a commensurate reduction in labor cost.

The main garment portion which detachably carries the panty of the invention may be of any kind or style, for instance, a slip, or a dress for street or evening wear.

The new panty, being detachably connected merely at its opposite ends, may be readily completely removed, for laundering, or quickly and conveniently disconnected at either end, for other purposes.

A feature of the invention, particularly important is a main garment portion, such as a street or evening dress, which is worn as the outer garment and without a slip, has the provision, on the inside of the main garment portion, at the front and back thereof, of extra elements for direct connection thereto of the ends of the panty.

Another feature of the invention is that, in an evening dress, shadow proof panels are stitched in the front and rear of the garment from the top of the panty along the length of the skirt portion to eliminate the use of a slip.

A further feature of the invention is that said extra elements are so constituted that they may be stitched in place on the main garment portion but in such manner that such stitching is not additional to other stitching employed in making the main garment portion, so that the presence of such extra elements is not betrayed by a special seam or seams visible from the exterior of the main garment portion.

Still a further feature of the invention is that said extra elements are swingably suspended flaps stitched solely at their upper portions to the main garment portion.

While only one such flap may be used, at the back or front of the main garment portion, preferably two such flaps are provided, one at the back and the other at the front of the main garment portion.

2

Still another feature of the invention is that the new panty, at each end thereof, is connected to the appropriate flap, as by buttons and buttonholes, snap fasteners or the like, so as to lie against that side of said flap which is remote from the body of the wearer. Then the buttons, when on the flaps, as is preferred, or the snap fasteners or the like, are cushioned relative to the body of the wearer by the sum of the thicknesses of the panty and of the flap, and this without interfering with perfect drape of the main garment portion.

For further comprehension of the invention, and of the objects and advantages thereof, reference will be had to the following description and accompanying drawing, and to the appended claim in which the various novel features of the invention are more particularly set forth.

In the accompanying drawing forming a material part of this disclosure:

Fig. 1 is a frontal perspective view showing a woman wearing a combination garment according to the invention, comprising a slip and a panty of a now approved form within the invention; the slip being shown as partially broken away in the vicinity of the front end of the panty.

Fig. 2 is a similar view, looking toward the back of the wearer.

Fig. 3 is a perspective view, showing the invention applied to a street dress; this view being similar to Fig. 1, except that such dress is not shown broken away.

Fig. 4 is a view similar to Fig. 3, but showing the invention applied to an evening dress.

Fig. 5 is a section taken, on a somewhat enlarged scale, on the line 5—5 of Fig. 1.

Fig. 6 shows the panty, removed and laid flat, and looking down on the side thereof which is its underside in Fig. 5.

Fig. 7 is a enlarged fragmentary perspective view, looking in the direction of the arrow 7 of Fig. 5, showing the rear end of the panty in course of being connected to or disconnected from the rear flap.

Referring to the drawings more in detail, in Figs. 1 and 2 the slip illustrated is as a whole marked 15, in Fig. 3 the street dress illustrated is marked 16, and in Fig. 4 the evening gown illustrated is marked 17.

Considering more particularly to Figs. 1, 2 and 5–7, the panty 18, of band form and shown as of rectangular outline, may be, as indicated in Figs.

6 and 7, suitably finished along its sides by stitchings 19 for laying edge folds 20, and along its ends by stitchings 21 for laying edge folds 22 wider than the folds 20. All around the same the panty may be further finished by providing, for instance, a lace edging 23, held in place by the stitchings 19 and 21.

The attaching means for both ends of the panty 18 are shown in the present case as buttons and buttonholes, the latter marked 24, and as illustrated most clearly in Fig. 6 carried by the panty. The cooperant buttons 25 are on the flaps.

The front and back flaps are shown as substantially identical, and so it will suffice to describe the rear flap, 26, this shown best in Fig. 7 when taken together with Fig. 5. The flap 26 is illustrated as a single piece of material swingably suspended at its bottom portion from the inside of the slip 15. Above such swingable bottom portion, said material piece is shown as having downwardly converging top edges which dip to a point central to the width of said piece. The front flap differs from the rear flap in that it has upwardly converged top edges.

By virtue of this shaping of the upper portion of the flap 26, two lines of stitches 27 and 28 are employed for stitching the upper inverted V-shaped portion of the flap 26 permanently to anchor said portion to the slip. Examples of said usual two-ply seams are shown best at 31 and 32 in Figs. 7 and 5, for stitching together the panel 29 and the side panels 33 and 34 of the slip 15.

Below the seams 27 and 28, the flap 26 may be suitably finished along its two side edges and along its bottom edge, as indicated in Figs. 5 and 7.

Referring to Fig. 1, the front flap corresponding to the rear flap 26 will be noted at 35, and the seams corresponding to the seams 27 and 28 will be noted at 36 and 37.

In Fig. 3, the flap corresponding to the front flap 35 may be readily located by reference to the broken-line leader from the number 38; and in Fig. 4 the flap corresponding to said front flap 35 may be readily located by reference to the broken-line leader from the numeral 38. In Fig. 3 the panty is indicated at 40, and in Fig. 4 at 41.

In Fig. 4, another feature of the invention is included. In this figure the evening dress 17 is shown to be provided with shadowproof panels 42 and 43 stitched respectively at the front and



rear of the garment from the top of the panty to the bottom along the length of the skirt portion. This arrangement will eliminate the need of a slip to shadow-proof the gown.

When the main garment portion is worn, the panty becomes naturally arranged as indicated in Fig. 5. While the main garment is being worn, the panty is comfortable and gives adequate coverage, and this entirely without bulging effect at the hips. Both ends of the panty are readily connected to and disconnected from the main garment portion, and so disconnected for laundering; and either end of the panty may be disconnected for other purposes. When the panty is removed for laundering, the buttons 25 form no part thereof, to be broken or torn off during washing.

While I have illustrated and described the preferred embodiments of my invention, it is to be understood that I do not limit myself to the precise constructions herein disclosed and the right is reserved to all changes and modifications coming within the scope of the invention as defined in the appended claim.

Having thus described my invention, what I claim as new, and desire to secure by United States Letters Patent is:

In an evening gown, front and rear flaps located within the gown at about the waist area, a panty removably connected between the bottom ends of said front and rear flaps, front and rear shadow-proofing panels located within the gown and extended from the top edges of said flaps to the bottom of the gown, said flaps and panels being of equal width at their top ends, and a single line of stitches securing the top end of each of said flaps and its respective panel in position within the gown with the top end of each panel located between the top end of its respective flap and the inner face of the gown.

HELEN M. ZYWIECKA.

## REFERENCES CITED

The following references are of record in the file of this patent:

UNITED STATES PATENTS


| Number | Name | Date |
|---|---|---|
| 1,238,686 | Kimball | Aug. 28, 1917 |
| 1,566,109 | McKeefrey | Dec. 15, 1925 |
| 1,729,601 | Ansley | Sept. 24, 1929 |
| 1,827,147 | Hall | Oct. 13, 1931 |
| 2,288,905 | Jackson | July 7, 1942 |
| 2,931,770 | Cangelose | Dec. 25, 1945 |