(12) INTERNATIONAL APPLICATION PUBLISHED UNDER THE PATENT COOPERATION TREATY (PCT)

(19) World Intellectual Property Organization
International Bureau

(43) International Publication Date
12 November 2020 (12.11.2020)

WIPO | PCT

(10) International Publication Number
WO 2020/227162 A1

(51) International Patent Classification:
A61K 38/37 (2006.01) *A61P 7/04* (2006.01)
A61K 9/22 (2006.01) *C07K 14/55* (2006.01)
A61K 38/36 (2006.01)

(21) International Application Number:
PCT/US2020/031197

(22) International Filing Date:
01 May 2020 (01.05.2020)

(25) Filing Language: English

(26) Publication Language: English

(30) Priority Data:
62/843,221 03 May 2019 (03.05.2019) US
62/845,209 08 May 2019 (08.05.2019) US

(71) Applicant: **RANI THERAPEUTICS, LLC** [US/US]; 2051 Ringwood Avenue, San Jose, California 95131 (US).

(72) Inventors: **IMRAN, Mir A.**; 12894 Brendel Drive, Los Altos Hills, California 94022 (US). **ANSALONI, Sara**; c/o InCube Labs, 2051 Ringwood Avenue, San Jose, California 95131 (US). **KORUPOLU, Radhika**; 43694 Skye Road, Fremont, California 94539 (US). **HARRIS, Joel**; 1027 Solana Drive, Mountain View, California 94040 (US). **HASHIM, Mir**; 3265 Winding Vista Common, Fremont, California 94539 (US). **GARAPATY, Anusha**; c/o InCube Labs, 2051 Ringwood Avenue, San Jose, California 95131 (US). **DASARI, Anvesh**; c/o InCube Labs, 2051 Ringwood Avenue, San Jose, California 95131 (US).

(74) Agent: **HESLIN, James M.**; Wilson Sonsini Goodrich & Rosati, 650 Page Mill Road, Palo Alto, California 94304-1050 (US).

(54) Title: CLOTTING FACTOR PREPARATIONS FOR DELIVERY INTO TISSUE OF THE INTESTINAL TRACT USING A SWALLOWABLE DRUG DELIVERY DEVICE

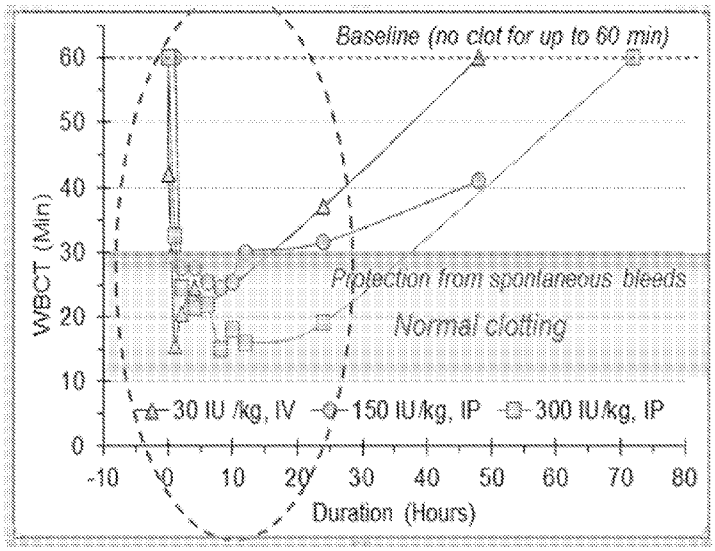

FIG. 28A

(57) Abstract: Embodiments provide devices, preparations and methods for delivering therapeutic agents (TAs) such as clotting factors (CFs), e.g., Factor VIII (FVIII) including PEGylated and other forms of stabilized FVIII, within the GI tract. Many embodiments provide a swallowable device e.g., a capsule for delivering TAs into the intestinal wall (IW). Embodiments also provide TA preparations configured to be contained within the capsule, advanced from the capsule into the IW and/or surrounding tissue (ST) and degrade to release the TA into the bloodstream to produce a therapeutic effect (e.g., improved clotting). The preparation can be operably coupled to delivery means having a first configuration where the preparation is contained in the capsule and a second configuration where the preparation is advanced out of the capsule into the IW or ST (e.g., the peritoneal cavity). Embodiments are particularly useful for delivery

WO 2020/227162 A1

[Continued on next page]

(81) Designated States *(unless otherwise indicated, for every kind of national protection available)*: AE, AG, AL, AM, AO, AT, AU, AZ, BA, BB, BG, BH, BN, BR, BW, BY, BZ, CA, CH, CL, CN, CO, CR, CU, CZ, DE, DJ, DK, DM, DO, DZ, EC, EE, EG, ES, FI, GB, GD, GE, GH, GM, GT, HN, HR, HU, ID, IL, IN, IR, IS, JO, JP, KE, KG, KH, KN, KP, KR, KW, KZ, LA, LC, LK, LR, LS, LU, LY, MA, MD, ME, MG, MK, MN, MW, MX, MY, MZ, NA, NG, NI, NO, NZ, OM, PA, PE, PG, PH, PL, PT, QA, RO, RS, RU, RW, SA, SC, SD, SE, SG, SK, SL, ST, SV, SY, TH, TJ, TM, TN, TR, TT, TZ, UA, UG, US, UZ, VC, VN, WS, ZA, ZM, ZW.

(84) Designated States *(unless otherwise indicated, for every kind of regional protection available)*: ARIPO (BW, GH, GM, KE, LR, LS, MW, MZ, NA, RW, SD, SL, ST, SZ, TZ, UG, ZM, ZW), Eurasian (AM, AZ, BY, KG, KZ, RU, TJ, TM), European (AL, AT, BE, BG, CH, CY, CZ, DE, DK, EE, ES, FI, FR, GB, GR, HR, HU, IE, IS, IT, LT, LU, LV, MC, MK, MT, NL, NO, PL, PT, RO, RS, SE, SI, SK, SM, TR), OAPI (BF, BJ, CF, CG, CI, CM, GA, GN, GQ, GW, KM, ML, MR, NE, SN, TD, TG).

Published:

— *with international search report (Art. 21(3))*

of CFs for treatment of clotting disorders (e.g., hemophilia) where such CFs are poorly absorbed and/or degraded within the GI tract.

CLOTTING FACTOR PREPARATIONS FOR DELIVERY INTO TISSUE OF THE INTESTINAL TRACT USING A SWALLOWABLE DRUG DELIVERY DEVICE

CROSS-REFERENCES TO RELATED APPLICATIONS

[0001] This application claims priority to, and the benefit of, U.S. Provisional Patent Application Serial Nos. 62/843,221 filed on May 3, 2019 and 62/845,209 filed on May 8, 2019, both of which are incorporated herein by reference in their entireties for all purposes.

BACKGROUND OF THE INVENTION

[0002] Field of the Invention. Embodiments of the invention relate to orally deliverable drug and other therapeutic agent formulations and swallowable drug delivery devices for delivery of those formulations into a wall of the lumen of the GI-tract such as the wall of the small intestine or surrounding tissue. More specifically, embodiments of the invention relate to orally deliverable drug formulations for the treatment of coagulation disorders. Still more specifically, embodiments of the invention relate to orally deliverable solid drug formulations for the treatment of hemophilia and von Willebrand's disease including coagulation proteins as clotting Factors VII, VIII, IX and X, particularly including stabilized forms of Factor VIII.

[0003] In the last ten years, there has been an increasing development of new drugs for the treatment of a variety of diseases including, for example, various clotting disorders. Unfortunately, many have limited application because they cannot be given orally. This is due to a number of reasons including: poor oral toleration with complications including gastric irritation and bleeding; breakdown/degradation of the drug compounds in the stomach; and poor, slow or erratic absorption of the drug. Conventional alternative drug delivery methods such as intravenous and intramuscular delivery have a number of drawbacks including pain and risk of infection from a needle stick, requirements for the use of sterile technique and the requirement and associated risks of maintaining an IV line in a patient for an extended period of time. While other drug delivery approaches have been employed such as implantable drug delivery pumps, these approaches require the semi-permanent implantation of a device and can still have many of the limitations of IV delivery. Thus, there is a need for improved and/or alternate methods for the delivery of drugs and other therapeutic agents.

[0004] There are several inherited bleeding disorders in the human population which can be fatal if left untreated. These include hemophilia A and B which are the most common and are caused by decreased levels of clotting factors in the patient's peripheral blood. They also include Factor VII deficiency and Factor X deficiency also called Stuart-Prower factor deficiency and Von Willebrand's disease caused by deficiency in von Willebrand Factor which binds Factor VIII. Hemophilia A, the most common form of hemophilia, is caused by deficiency in Factor VIII (FVIII). Hemophilia B is caused by decreased

synthesis of Factor IX (F IX) or synthesis of defective Factor IX having reduced activity. Current forms of Hemophilia treatment involve replacing the missing or defective clotting factor with recombinant or plasma-derived clotting factors such as FVIII or FIX. Typically these factors are injected, usually intravenously.

[0005] However, there are a number of issues and shortcomings with the current forms of hemophilia treatments. In particular, a number of patients develop antibodies to the replacement clotting factors diminishing their effectiveness and potentially resulting in serious complications as is discussed below. Other issues include the requirements to come into the doctor's office/clinic to have the injection done and the requirement that the injection be done very slowly into a vein. Also as the clotting factors are usually administered via peripheral intravenous injection, people with small veins or children can have a difficult time receiving the injections in that veins are hard to find and can easily collapse. This issue can be especially problematic in the case of children who require more frequent injections. Also, the injection itself can cause bleeding.

[0006] Many patients develop antibodies (known as "inhibitors" or "inhibitory antibodies") in response to receiving various clotting factors which inhibit or otherwise impede the action of the clotting factor. The development of inhibitor antibodies to Factor VIII is a serious complication in the management of patients with hemophilia A. Inhibitory antibodies develop in approximately 20% of patients with Hemophilia A in response to therapeutic infusions of Factor VIII. This is due to the higher doses of Factor VIII or other clotting factor administered. In previously untreated patients with hemophilia A who develop inhibitors, the inhibitors usually develop within one year of treatment. Additionally, autoantibodies that inactivate factor VIII occasionally develop in individuals with previously normal factor VIII levels. If the inhibitors titer is low enough, patients can be managed by increasing the dose of factor VIII though there are potential complications. However, it is often the case that the inhibitors titer is so high that it cannot be overwhelmed by increasing the dose of Factor VIII. While therapies are available to eliminate or reduce the titer of these antibodies, they are costly (e.g., on the order of a $1 million per patient per year), time consuming and involve regular intravenous administration of coagulation factors. Also, these treatments work in only about three-quarters of patients.

[0007] While other administration routes for factor VIII replacement therapies have been investigated in the past, they have not had much success. Sub-cutaneous (SC) administration is limited by the amount of active drug that can be administered at once, which cannot reach therapeutic levels for these factors. It is also limited by the susceptibility of these factors to protease mediated degradation. Another concern is the increased immunogenicity of the SC route compared to IV which may result in the increased or more rapid production of inhibitory antibodies compared to the IV injection route. What is needed therefore, are compositions and methods for delivering clotting factors such as factors VII, VIII, IX and X without the need for injection and to do so in a manner which does not cause the development of inhibitor antibodies or other immunogenic reaction against the clotting factor.

[0008] Listing of Related Cases. This application incorporates by reference in their entirety for all purposes the following patent applications and patents,: U.S. Provisional Patent Application Serial No. 62/582,857, filed November 7th, 2017, titled "Clotting Factor Preparations For Delivery Into Tissue Of The Intestinal Tract Using A Swallowable Drug Delivery Device"; U.S. Patent Application Serial No. 16/183,573 filed November 7th 2018, titled "Clotting Factor Preparations For Delivery Into Tissue Of The Intestinal Tract Using A Swallowable Drug Delivery Device"; U.S. Provisional Application Serial No. 62/786,831, filed December 31, 2018, titled "Therapeutic Agent Preparations And Methods For Drug Delivery Into A Lumen Of The Intestinal Tract Using A Swallowable Drug Delivery Device"; U.S. Provisional Application Serial No. 62/818,053, filed March 13, 2019, titled "Therapeutic Agent Preparations And Methods For Drug Delivery Into A Lumen Of The Intestinal Tract Using A Swallowable Drug Delivery Device"; U.S. Provisional Application Serial No. 62/820,174, filed March 18, 2019, titled "Therapeutic Agent Preparations And Methods For Drug Delivery Into A Lumen Of The Intestinal Tract Using A Swallowable Drug Delivery Device" U.S. Patent Application Serial No. 15/260,260 filed September 8, 2016 titled "PCSK9 Antibody Preparations For Delivery Into A Lumen Of The Intestinal Tract Using A Swallowable Drug Delivery Device"; U.S. Provisional Patent Application Serial No. 61/571,642 filed June 30, 2011 titled "Therapeutic Agent Preparations for Delivery Into a Lumen of The Intestinal Tract Using a Swallowable Drug Delivery Device"; U.S. Provisional Patent Application Serial No. 61/571,641 filed June 29, 2011 titled "Device, System and Method for the Oral Delivery of Therapeutic Compounds"; U.S. Patent Application Serial No. 12/978,233 filed December 23, 2010 titled "Swallowable Drug Delivery Device and Methods of Drug Delivery"; U.S. Patent Application Serial No. 12/978,164 filed December 23, 2010 titled "Therapeutic Agent Preparations for Delivery Into a Lumen of The Intestinal Tract Using a Swallowable Drug Delivery Device"; U.S. Patent Application Serial No. 12/978,301 December 23, 2010 titled "Swallowable Drug Delivery Device and Method of Delivery"; U.S. Patent Application Serial No. 13/532,589 filed June 25, 2012 titled "Device, System And Methods For The Oral Delivery Of Therapeutic Compounds"; U.S. Patent No. 8,809,269 titled "Therapeutic Agent Preparations Comprising Insulin for Delivery into a Lumen of the Intestinal Tract using a Swallowable Drug Delivery Device"; U.S. Provisional Patent Application Serial No. 61/993,907 filed May 15, 2014 titled "Pharmaceutical Compositions And Methods For Fabrication Of Solid Masses Comprising Polypeptides And/Or Proteins"; U.S. Provisional Patent Application Serial No. 62/156,105 filed May 1, 2015 titled "Pharmaceutical Compounds And Methods For Fabrication Of Solid Masses Comprising Polypeptides And/Or Proteins; U.S. Provisional Patent Application Serial No. 62/159,134 filed May 8, 2015 titled "Anti-Interleukin Antibody Preparations For Delivery Into A Lumen Of The Intestinal Tract Using A Swallowable Drug Delivery Device"; US Provisional Application Serial No. 62/215,586 filed September 8, 2015 titled "PCSK9 Antibody Preparations For Delivery Into A Lumen Of The Intestinal Tract Using A Swallowable Drug Delivery Device".

SUMMARY OF THE INVENTION

[0009] In one aspect, the present invention provides a therapeutic preparation for treatment of a clotting disorder in a patient, the preparation comprising a solid, stabilized form of Factor VIII (FVIII) at a dosage above 75 IU/kg body weight of the patient. The preparation is typically provided with a tissue-penetrating feature, such as a tapered or pointed end, and is configured for oral delivery into the patient's intestines and insertion in solid form through the patient's intestinal wall and into the patient's peritoneal cavity. After entering the peritoneal cavity, the preparation is degraded in serosal fluids of the peritoneal cavity to release the stabilized form of FVIII into the blood stream to produce a therapeutically effective plasma concentration of FVIII. Unexpectedly, it has been found that intraperitoneal (IP) delivery of a dosage of at least the 75 IU/kg body weight threshold level of stabilized, typically PEGylated, FVIII, provides a therapeutic result at least equal to, and in some instances better than that achieved by intravascular (IV) delivery of commonly used dosages of stabilized FVIII.

[0010] As used herein and in the claims, "Factor VIII" refers to all biologically active forms of Factor VIII, specifically including Factor VIIIA. For convenience, all biologically active forms of Factor VIII will be referred to herein as "Factor VIII" or FVIII.

[0011] In particular embodiments of the therapeutic preparations of the present invention, the stabilized Factor VIII may comprise PEGylated factor VIII. In further embodiments, the PEGylated factor VIII may be present in the therapeutic preparation in a range from 75 IU/kg body weight to 400 IU/kg body weight, often being in a range from100 IU/kg body weight to 350 IU/kg body weight, and often in range from from150 IU/kg body weight to 300 IU/kg body. Typically, but not necessarily, the preparation is shaped as a solid tissue-penetrating member configured to penetrate an intestinal wall by the application of force on the tissue penetrating member in a direction that engages a tissue-penetrating end or feature of the solid preparation against the inner surface of the intestinal wall and into the peritoneal cavity.

[0012] The therapeutic preparations of the present invention, when delivered intraperitoneally to a patient, will be able to achieve one or more of a number of target endpoints, including one or more of a T_{max} in a range from 8 to 10 hours, a C_{max} in a range from about 2.5 IU/ml to 3.5 IU/ml, an area under the curve (AUC) in a range from 60 (IU*h)/mL to 70 (IU*h)/mL, and a ratio of a rising curve portion to a falling curve portion in a range from 1:4 to 1:8.

[0013] While the stabilized form of FVIII present in the therapeutic preparations of the present invention will typically comprise PEGylated FVIII (as described in more detail below), in other instances, the stabilized FVIII may be chemically complexed with Von Willebrand factor and/or be modified by Fc-fusion, optionally in place of or in addition to a PEGylated form of FVIII, e.g., two or more forms of stabilized and/or unstabilized FVIII may be combined into mixed compositions.

[0014] In another aspect, the present invention provides methods for treating a clotting disorder in a patient. The method typically comprises providing stabilized Factor VIII (FVIII), typically but not necessarily PEGylated FVIII, formed as a solid tissue penetrating member, which may be in any of the forms described above with respect to the preparations of the present invention. The solid tissue

penetrating member is caused to penetrate through the patient's intestinal wall and into the patient's peritoneal cavity, typically after oral ingestion in a protected form that prevents both premature penetration into the esophagus, stomach, and pylorus and degradation of the stabilized FVIII, by the application of force on the tissue penetrating member such that the tissue penetrating member is delivered into the peritoneal cavity. After entering the peritoneal cavity, the preparation typically dissolves in the serosal fluids to release a therapeutically effective dosage of stabilized FVIII above 75 IU/kg body weight into the blood stream to treat the clotting disorder.

[0015] In particular instances, the FVIII is released into the blood stream to produce a plasma concentration-time curve characterized by at least one pharmacokinetic parameter selected from the group consisting of T½ (elimination half-life), C_{max} (the highest concentration of a drug in the blood), T_{max} (the time to reach C_{max}), area under the curve (AUC-a measure of the exposure to the drug), bioavailability, or a ratio of a rising curve portion to falling curve portion. The T_{max} is typically in a range from 8 to 10 hours, while the C_{max} may be in a range from about 2.5 IU/ml to 3.5 IU/ml, the area under the curve (AUC) may be in a range from 60 (IU*h)/mL to 70 (IU*h)/mL, and the ratio of a rising curve portion to a falling curve portion in a range from 1:4 to 1:8.

[0016] Preferred stabilized FVIII forms and concentrations include PEGylated factor VIII at a concentration in a range from 75 IU/kg body weight to 400 IU/kg body weight and PEGylated factor VIII at a concentration in a range from150 IU/kg body weight to 300 IU/kg body weight.

[0017] Embodiments of the invention provide devices, systems, kits and methods for delivering drugs and other therapeutic agents to various locations in the body. Many embodiments provide a swallowable device for delivering drugs such as coagulation proteins and other therapeutic agents within the Gastrointestinal (GI) tract and surrounding tissue such as the peritoneal cavity. Particular embodiments of the invention provide a swallowable device such as a capsule for delivering coagulating proteins and other therapeutic agents into the wall of the small intestine and/or surrounding tissue (e.g., the peritoneal wall or cavity) as well as into the wall of the stomach. Such coagulating proteins (CP) can include various coagulating factors (AKA clotting factors) including one or more of factors VII, VIII, IX, X and von Willebrand Factor. Embodiments of the invention are particularly useful for the oral delivery of coagulating proteins and other therapeutic agents, which are poorly absorbed, poorly tolerated and/or degraded within the GI tract so that their biological activity is lost or diminished. Also, embodiments of the invention are particularly useful for the oral delivery of clotting factors and other coagulating proteins for the treatment of Hemophilia and other coagulation disorders which were previously only capable of being delivered by intravascular injection. Further, embodiments of the invention are particularly useful for delivering clotting factors such as Factor VIII, with minimal or no production of inhibitory antibodies which destroy or reduces the efficacy of the clotting factor. Further still, embodiments of the invention are particularly useful for delivering clotting factor and other coagulating proteins into the intestinal wall and peritoneal cavity for rapid uptake into the blood stream with reduced loss in bioactivity during transit through the peritoneal wall(s) and/or lymphatic tissue.

[0018] In one aspect, the invention provides therapeutic agent preparations for delivery into the wall of the small intestine and/or surrounding tissue (e.g., the peritoneal cavity) or other location in the intestinal tract, comprising a therapeutically effective dose of at least one clotting factor for the treatment of a clotting disorder such as hemophilia A. The clotting factor may comprise one more of Factor VII, VIII, IX, X, von Willebrand factor, etc. along with their respective analogues and derivatives and fragments. The preparation may have a shape and material consistency to be contained in an embodiment of the swallowable capsule (or like device) and delivered from the capsule into the intestinal wall or surrounding tissue (e.g., the peritoneal wall and/or peritoneal cavity) to release the dose of Clotting Factor (CF) from within the intestinal wall or surrounding tissue such as the peritoneal cavity. Such shapes may correspond to various tissue penetrating structures including those having a pointed end such as various dart-like, or needle like shapes or other like structures. For embodiments of the preparation delivered into the peritoneal cavity, the needle or other pointed end desirably has a straight or symmetrical vertical point or dart shape so as to be able to penetrate through the intestinal wall and into the peritoneal cavity without being deflected by any asymmetries in the needle shape. The preparation may be in solid, liquid, or powder form or a combination thereof. Preferably, the preparation including the CF is in solid form allowing the preparation to be stored for extended periods of time, as well as to be shaped (e.g., into a tissue penetrating shape such as a needle shape) and have a mechanical force or other force exerted against the preparation to insert it into intestinal wall and/or surrounding tissue such as the peritoneal cavity and/or peritoneal wall. According to various embodiments, the coagulation factor may be selected from clotting factors including one or more of Factor VII, VIII, IX, X and Von Willebrand Factor and/or their functional variants (e.g., analogues and derivatives) thereof known in the art, with such variants retaining the characteristic property of the clotting factors.

[0019] In particular embodiments, the invention provides therapeutic preparations for the treatment of a clotting disorder comprising a stabilized form of Factor VIII (or other clotting factor), so as to increase the circulatory half-life of the drug (also described as T½). The stabilization may be achieved by one or both of the following approaches: i) chemical complexing the Factor VIII (or other clotting factor) with a stabilizing agent or ii) including in the therapeutic preparation comprising Factor VIII an excipient comprising a stabilizing agent which is also described herein as a stabilizing excipient. Examples of chemical complexing methods and agents include PEGylation (where the FVIII molecule is complexed with a PEG molecule) or via Fc-fusion, both of which are described in more detail herein. Examples of stabilizing excipients include protease inhibitors such as heparin and FTP, Von Willebrand Factor, Albumin and calcium. In use, delivery of a stabilized form of Factor VIII, advantageously reduces one or both of the dosage amount and frequency of dosing of drug.

[0020] In another aspect, the invention provides methods for treating hemophilia or other clotting disorders comprising orally administering to a patient a preparation comprising a therapeutically effective amount of a clotting factor (e.g., Factor VIII) using one or more embodiments of the swallowable capsule described herein, thereby treating the clotting disorder. In particular embodiments, the invention provides

methods for the oral delivery of one or more of i) a therapeutic amount of Factor VII for the treatment of one or more of Factor VII deficiency, congenital hemophilia with inhibitors, acquired hemophilia or Glanzmann's Thrombasthenia; ii) a therapeutic amount of Factor VIII for the treatment of Hemophilia A; iii) a therapeutic amount of Factor IX for the treatment of Hemophilia B; iv) a therapeutic amount of Factor X for the treatment of Factor X deficiency; and v) a therapeutic amount of von Willebrand Factor for the treatment of Von Willebrand's disease. Also, in particular embodiments, described in more detail below, the swallowable capsule, can be configured to deliver the clotting factor preparation to a section of the small intestine without Peyer's Patches. Such targeted delivery to a desired section of the small intestine results in a suppressed immune response to the clotting factor including suppressed or minimized production of general antibodies such as IgG and specific inhibitor antibodies to the clotting factor. In use, embodiments of this approach provides the benefit of improved long-term tolerance to and efficacy of the delivered clotting factor and in turn better long-term control of the patients clotting disorder without the need for expensive treatments to eliminate the inhibitor antibodies.

[0021] The invention also provides methods for treating a clotting disorder comprising selecting a patient having hemophilia or other clotting disorder and administering to the patient a therapeutically effective amount of a clotting factor or other coagulation protein using one or more embodiments of the swallowable capsule described herein. Clotting time (e.g., prothrombin times or whole blood clotting time (WBCT)) can then be measured and monitored using methods knows in the art to determine the efficacy of treatment. That information can then be used to make adjustments in the dosage (e.g., increase or decrease) and/or dosing regimen (e.g., dose frequency of the administered clotting factor). In alternative or additional embodiments, solid forms of the clotting factors described herein may be delivered by other swallowable devices as well.

[0022] In other aspects, the invention provides a method for delivering therapeutic agents into the wall of the small intestine and/or surrounding tissue such as the peritoneal wall and peritoneal cavity comprising swallowing a drug delivery device comprising a capsule, an actuator and an embodiment of the therapeutic agent preparation such as a Clotting Protein or Clotting Factor preparation (e.g., a preparation comprising one or more clotting factors). The actuator is responsive to a condition in the small intestine such as pH so as to actuate delivery of the therapeutic agent preparation into the wall of the small intestine and/or surrounding tissue such as the wall of the peritoneum. In specific embodiments, the actuator can comprise a release element or coating on the capsule which is degraded by a selected pH in the small intestine. Once degraded, the element or coating initiates delivery of the therapeutic agent preparation by one or more delivery means such as the by expansion of one or more balloons that are operably coupled to one or more tissue penetrating members that contain the therapeutic agent preparation and are configured to penetrate and be advanced into the intestinal wall or surrounding tissue upon expansion of the balloon. In particular embodiments, the balloon or other advancement means is configured to advance the tissue penetrating member(s) through intestinal wall into the peritoneal cavity where it is retained. Once the tissue penetrating members are positioned the intestinal wall or surrounding

tissue such as the peritoneal cavity, they degrade to release the therapeutic agent into the bloodstream. In particular embodiments where tissue penetrating members are positioned and retained in the peritoneal cavity, the tissue penetrating member(s) including the therapeutic agent preparation are configured to be degraded by tissue fluids within the peritoneal cavity.

[0023] In related embodiments, the invention provides clotting factor preparations or other therapeutic preparations and associated methods for delivery into the intestinal wall or surrounding tissue where one or more pharmacokinetic parameters of delivery can be achieved. Such parameters may include, for example, one or more of absolute bioavailability (also referred as F, which is expressed in per cent), T_{max}, T½, C_{max} and area under the curve (or AUC). Absolute" bioavailability is the amount of drug from a formulation that reaches the systemic circulation relative to an intravenous (IV) dose, where the IV dose is assumed to be 100% bioavailable. T_{max} is the time period for the therapeutic agent (e.g., clotting factor) to reach its maximum concentration in the blood stream, C_{max}, and T½ being the time period required for the concentration of the therapeutic agent in the bloodstream (or other location in the body) to reach half its original C_{max} value after having reached C_{max}. Because the therapeutic agent preparation is delivered directly into the wall of the small intestine or surrounding tissue such as the peritoneal wall or cavity, the T_{max} is faster (e.g., shorter) than a corresponding T_{max} when the therapeutic agent is non-vascularly injected into the body such as by intramuscular or subcutaneous injection. In various embodiments, the T_{max} achieved by insertion of therapeutic preparation comprising clotting factor or other therapeutic agents into the intestinal wall using one or more embodiments of the invention (such as an embodiment of the swallowable device) can be 80%, 50%, 30%, 20 or even 10% of T_{max} achieved through the use of a non-vascular injection of the therapeutic agent. As used herein the term "about" generally refers to within 5% of the stated value of a number, but in some cases may be larger or smaller. In specific embodiments where the therapeutic comprises a clotting factor such as Factor VIII, the T_{max} can be in a range from about 5 to 13 hours. For example, for ESPEROCT, T_{max} can be in range from about 5.4 to 9 hours with a specific embodiment of about 7.2 hours. For other PEGylated FVIII, the T_{max} can be in a range from about 7.8 to 13 hours with a specific embodiment of about 10.4 hours. For antibodies, for example, IgG, the T_{max} can be about 24 hours while the T½ can be in range from about 40.7 to 128 hours, with a specific value of about 87.7 hours.

[0024] Depending upon the drug, the T½ may be in range from 5 to 50 hours. For particular embodiments, involving PEGylated Factor VIII or other form of Factor VIII that is stabilized (e.g., by being chemically complexed with (e.g., conjugated or linked to) a stabilizing agent such as PEG), the T½ can be in the range of about 15.7 to 27.1 hours. For ESPEROCT the T½ can be in the range from 16.3 to 27.1 with a specific embodiment of 21.7 and for other PEGylated FVIII, 11.25 to 18.75 hours with a specific embodiment of 15 hours. Still other ranges and specific values are contemplated. For embodiments where the Factor VIII is complexed with von Willebrand factor even greater values for T½ are contemplated.

[0025] In particular embodiments, including those, for example, where the therapeutic preparation comprises a clotting factor such as various forms of Factor VIII including a PEGylated or other stabilized form of Factor VIII, the absolute bioavailability of therapeutic agent delivered by embodiments of the invention can be in the range of about 11 to 60%. For PEGylated FVIII, the bioavailability can be in the range from about 11 to 60%. Still other values are contemplated as well. For embodiments using stabilizing excipients such as calcium, von Willebrand factor, heparin, diisopropyl fluorophosphate (DFP) or other protease inhibitor, even greater levels of bioavailability are contemplated as the Factor VIII will be stabilized during transit across the peritoneal wall into the vasculature.

[0026] Also in related embodiments, the therapeutic preparation and associated methods for their delivery into the wall of the small intestine or surrounding tissue can be configured to produce plasma/blood concentration vs time profiles (also described has plasma-time profiles or plasma-time curves) of the therapeutic agent having a selected shape with C_{max} or T_{max} as reference points. For example, the plasma concentration vs time profile may have a rising portion and falling portion with selected ratios of the time it takes to go from pre-delivery concentration of therapeutic agent to a C_{max} level during the rising portion (known as rise time), to the time it takes during the falling portion to go from the C_{max} level back to the pre-delivery concentration (known as fall time). In various embodiments, the ratio of the rising portion to the falling portion can be in the range of about 1 to 20, 1 to 10 and 1 to 5. In specific embodiments of therapeutic preparation comprising a stabilized form of Factor VIII (e.g., by PEGylation), the ratio of rise time to fall time in the profile can be about 1 to 5 (e.g., for ADYNOVATE) and about 1 to 11 (for ESPEROCT). In specific embodiments of therapeutic preparation comprising an antibody such as IgG, the ratio of rise time to fall time in the profile can be about 1 to 9.

[0027] In another aspect, the invention provides a swallowable device for delivering a drug or other therapeutic agent preparation into the wall of the small or large intestine, peritoneum or other organ of the gastro-intestinal tract. The device comprises a capsule sized to be swallowed and pass through the gastro-intestinal tract, a deployable aligner positioned within the capsule for aligning a longitudinal axis of the capsule with a longitudinal axis of the small intestine, a delivery mechanism for delivering the therapeutic agent into the intestinal wall and a deployment member for deploying at least one of the aligner or the delivery mechanism. The capsule wall is degradable by contact with liquids in the GI tract but also may include an outer coating or layer which only degrades in the higher pH found in the small intestine, and serves to protect the underlying capsule wall from degradation within the stomach before the capsule reaches the small intestine at which point the drug delivery is initiated by degradation of the coating. In use, such materials allow for the targeted delivery of a therapeutic agent in a selected portion of the intestinal tract such as the small intestine. Suitable outer coatings can include various enteric coatings such as various co-polymers of acrylic acid (a particular example including EUDRAGIT available from EVONIK industries), Methacrylic Acid and Ethyl Acrylate. In particular embodiments, the outer coating can be configured to degrade in the pH found in the upper portion of the small intestine (e.g., the duodenum) or mid portions (jejunum) such that therapeutic agent preparation is delivered into that

respective portion and avoids the lower portion of the small intestine (the ileum) containing the Peyer's patches which are aggregated lymphoid nodules which produce macrophages, and other immune related cells. An example of such a coating which degrades in the pH of the duodenum or jejunum can include EUDRAGIT. By delivering the therapeutic agent to a location in the small intestine without Peyer's patches, the subsequent immune response including the generation of various antibodies to the particular therapeutic agent such as inhibitor antibodies to Factor VIII, is suppressed or otherwise minimized. Thus in use, such controlled placement or delivery of the therapeutic agent into the upper, mid or other select portions of the small intestines, can suppress the immune response of the patient to a particular therapeutic agent (e.g., Factor VIII or other clotting factor) resulting in increased efficacy and tolerance to a dose of a given therapeutic agent delivered orally vs that delivered via intravenous or subcutaneous injection.

[0028] Another embodiment of the capsule includes at least one guide tube, one or more tissue penetrating members positioned in at least one guide tube, a delivery member and an actuating mechanism. The tissue penetrating member will typically comprise a hollow needle or other like structure and will have a lumen and a tissue penetrating end for penetrating a selectable depth into the intestinal wall. In various embodiments, the device can include a second and a third tissue penetrating member with additional numbers contemplated. Each tissue penetrating member can include the same or a different drug. In preferred embodiments having multiple tissue penetrating members, the tissue penetrating members can be symmetrically distributed around the perimeter of the capsule so as to anchor the capsule onto the intestinal wall during delivery of drug. In some embodiments, all or a portion of the tissue penetrating member (e.g., the tissue penetrating end) can be fabricated from the drug preparation itself. In these and related embodiments, the drug preparation can have a needle, dart-like or other elongated structure with a pointed end (with or without barbs) configured to penetrate and be retained in the intestinal wall.

[0029] The tissue penetrating member can be fabricated from various biodegradable materials so as to degrade within the small intestine (or other GI-lumen) and thus provide a fail-safe mechanism for detaching the tissue penetrating member from the intestinal wall should this component become retained in the intestinal wall. Such biodegradable materials may correspond to one or more of, poly(glycolide-co-lactide) (PGLA), polylactic-co-glycolic acid (PLGA), maltose or other sugar, polyethylene, polyethylene oxide or other biodegradable polymer known in the art. Additionally, in these and related embodiments, selectable portions of the capsule can be fabricated from such biodegradable materials so as to allow the entire device to controllably degrade into smaller pieces. Such embodiments facilitate passage and excretion of the devices through the GI tract. In particular embodiments, the capsule can include seams of biodegradable material which controllably degrade to produce capsule pieces of a selectable size and shape to facilitate passage through the GI tract. The seams can be pre-stressed, perforated or otherwise treated to accelerate degradation. The concept of using biodegradable seams to produce controlled degradation of a swallowable device in the GI tract can also be applied to other swallowable devices such

as swallowable cameras to facilitate passage through the GI tract and reduce the likelihood of a device becoming stuck in the GI tract.

[0030] The delivery member is configured to advance the drug from the capsule through the tissue penetrating member lumen and into the intestinal wall. Typically, at least a portion of the delivery member is advanceable within the tissue penetrating member lumen. The delivery member can have a piston or like structure sized to fit within the delivery member lumen. The distal end of the delivery member (the end which is advanced into tissue) can have a plunger element which advances the drug within tissue penetrating member lumen and also forms a seal with the lumen. The plunger element can be integral or attached to the delivery member. Preferably, the delivery member is configured to travel a fixed distance within the needle lumen so as to deliver a fixed or metered dose of drug into the intestinal wall. This can be achieved by one or more of the selection of the diameter of the delivery member (e.g., the diameter can be distally tapered), the diameter of the tissue penetrating member (which can be narrowed at its distal end), use of a stop and/or the actuating mechanism. For embodiments of the device having a tissue penetrating member fabricated from drug (e.g., a drug dart), the delivery member is adapted to advance the dart out of the capsule and into tissue.

[0031] The delivery member and tissue penetrating member can be configured for the delivery of liquid, semi-liquid or solid forms of drug or all three. Solid forms of drug can include both powder and pellet. Semi liquid can include a slurry or paste. The drug can be contained within a cavity of the capsule, or in the case of the liquid or semi-liquid, within an enclosed reservoir. In some embodiments, the capsule can include a first, second, or a third drug (or more). Such drugs can be contained within the tissue penetrating member lumen (in the case of solids or powder) or in separate reservoirs within the capsule body.

[0032] The actuating mechanism can be coupled to at least one of the tissue penetrating member or the delivery member. The actuating mechanism is configured to advance the tissue penetrating member a selectable distance into the intestinal wall as well as advance the delivery member to deliver the drug and then withdraw the tissue penetrating member from the intestinal wall. In various embodiments, the actuating mechanism can comprise a preloaded spring mechanism which is configured to be released by the release element. Suitable springs can include both coil (including conical shaped springs) and leaf springs with other spring structures also contemplated. In particular embodiments, the spring can be cone shaped to reduce the length of the spring in the compressed state even to the point where the compressed length of the spring is about the thickness of several coils (e.g., two or three) or only one coil.

[0033] In particular embodiments, the actuating mechanism comprises a spring, a first motion converter, and a second motion converter and a track member. The release element is coupled to the spring to retain the spring in a compressed state such that degradation of the release element releases the spring. The first motion converter is configured to convert motion of the spring to advance and withdraw the tissue penetrating element in and out of tissue. The second motion converter is configured to convert motion of the spring to advance the delivery member into the tissue penetrating member lumen. The motion

converters are pushed by the spring and ride along a rod or other track member which serves to guide the path of the converters. They engage the tissue penetrating member and/or delivery member (directly or indirectly) to produce the desired motion. They are desirably configured to convert motion of the spring along its longitudinal axis into orthogonal motion of the tissue penetrating member and/or delivery member though conversion in other directions is also contemplated. The motion converters can have a wedge, trapezoidal or curved shape with other shapes also contemplated. In particular embodiments, the first motion converter can have a trapezoidal shape and include a slot which engages a pin on the tissue penetrating member that rides in the slot. The slot can have a trapezoidal shape that mirrors or otherwise corresponds to the overall shape of the converter and serves to push the tissue penetrating member during the upslope portion of the trapezoid and then pull it back during the down slope portion. In one variation, one or both of the motion converters can comprise a cam or cam like device which is turned by the spring and engages the tissue penetrating and/or delivery member.

[0034] In other variations, the actuating mechanism can also comprise an electro-mechanical device/mechanism such as a solenoid or a piezoelectric device. In one embodiment, the piezoelectric device can comprise a shaped piezoelectric element which has a non-deployed and deployed state. This element can be configured to go into the deployed state upon the application of a voltage and then return to the non-deployed state upon the removal of the voltage. This and related embodiments allow for a reciprocating motion of the actuating mechanism so as to both advance the tissue penetrating member and then withdraw it.

[0035] The release element is coupled to at least one of the actuating mechanism or a spring coupled to the actuating mechanism. In particular embodiments, the release element is coupled to a spring positioned within the capsule so as to retain the spring in a compressed state. Degradation of the release element releases the spring to actuate the actuation mechanism. In many embodiments, the release element comprises a material configured to degrade upon exposure to chemical conditions in the small or large intestine such as pH. Typically, the release element is configured to degrade upon exposure to a selected pH in the small intestine, e.g., about 7.0, 7.1, 7.2, 7.3, 7.4, 8.0 or greater. However, it can also be configured to degrade in response to other conditions in the small intestine e.g., osmolality, fluid content of the small intestine contents, viscosity of contents, flora, compressive forces, presence and/or concentration of various bile salts and the like. In particular embodiments, the release element can be configured to degrade in response to particular chemical conditions in the fluids in the small intestine such as those which occur after ingestion of a meal (e.g., a meal high in fats or proteins).

[0036] Biodegradation of the release element from one or more conditions (e.g., pH, osmolality, presence of bile salts, etc.) in the small intestine (or other location in the GI tract) can be achieved by selection of the materials for the release element, the amount of cross linking of those materials as well as the thickness and other dimensions of the release elements. Lesser amounts of cross linking and or thinner dimensions can increase the rate of degradation and vice versa. Suitable materials for the release element can comprise biodegradable materials such as various enteric materials which are configured to degrade

upon exposure to the higher pH or other condition in the small intestine. The enteric materials can be copolymerized or otherwise mixed with one or more polymers to obtain a number of particular material properties in addition to biodegradation. Such properties can include without limitation stiffness, strength, flexibility and hardness.

[0037] In particular embodiments, the release element can comprise a film or plug that fits over or otherwise blocks the guide tube and retains the tissue penetrating member inside the guide tube. In these and related embodiments, the tissue penetrating member is coupled to a spring-loaded actuating mechanism such that when the release element is degraded sufficiently, it releases the tissue penetrating member which then springs out of the guide tube to penetrate into the intestinal wall. In other embodiments, the release element can be shaped to function as a latch which holds the tissue penetrating element in place. In these and related embodiments, the release element can be located on the exterior or the interior of the capsule. In the interior embodiments, the capsule and guide tubes are configured to allow for the ingress of intestinal fluids into the capsule interior to allow for the degradation of the release element.

[0038] In some embodiments, the actuating mechanism can be actuated by means of a sensor, such as a pH or other chemical sensor which detects the presence of the capsule in the small intestine and sends a signal to the actuating mechanism (or to an electronic controller coupled to the actuating mechanism to actuate the mechanism). Embodiments of a pH sensor can comprise an electrode-based sensor or a mechanical-based sensor such as a polymer which shrinks or expands upon exposure to the pH or other chemical conditions in the small intestine. In related embodiments, an expandable/contractible sensor can also comprise the actuating mechanism itself by using the mechanical motion from the expansion or contraction of the sensor.

[0039] According to another embodiment for detecting that the device is in the small intestine (or other location in the GI tract), the sensor can comprise a strain gauge or other pressure/force sensor for detecting the number of peristaltic contractions that the capsule is being subject to within a particular location in the intestinal tract. In these embodiments, the capsule is desirably sized to be gripped by the small intestine during a peristaltic contraction). Different locations within the GI tract have different number of peristaltic contractions. The small intestine has between 12 to 9 contractions per minute with the frequency decreasing down the length of the intestine. Thus, according to one or more embodiments detection of the number of peristaltic contractions can be used to not only determine if the capsule is in the small intestine but the relative location within the intestine as well.

[0040] As an alternative or supplement to internally activated drug delivery, in some embodiments, the user may externally activate the actuating mechanism to deliver drug by means of RF (radio frequency), magnetic or other wireless signaling means known in the art. In these and related embodiments, the user can use a handheld device (e.g., a hand-held RF device) which not only includes signaling means, but also means for informing the user when the device is in the small intestine or other location in the GI tract. The later embodiment can be implemented by including an RF transmitter on the swallowable device to

signal to the user when the device is in the small intestine or other location (e.g., by signaling an input from the sensor). The same handheld device can also be configured to alert the user when the actuating mechanism has been activated and the selected drug(s) delivered. In this way, the user is provided confirmation that the drug has been delivered. In another approach an external acoustical sensor can be used to detect when the actuating mechanism has been activated by detecting sounds unique to the actuating mechanism be activated, for example, by detecting one or more eigen frequency sounds which can occur for embodiments using a chamber including a piston and cylinder mechanism operably coupled to the tissue penetrating member. One or more of the preceding approaches allow the user to take other appropriate drugs/therapeutic agents as well as make other related decisions (e.g., for diabetics to eat a meal or not and what foods should be eaten). The handheld device can also be configured to send a signal to the swallowable device to over-ride the actuating mechanism and so prevent, delay or accelerate the delivery of drug. In use, such embodiments allow the user to intervene to prevent, delay or accelerate the delivery of drug based upon other symptoms and/or patient actions (e.g., eating a meal, deciding to go to sleep, taking other medication, exercise etc.).

[0041] The user may also externally activate the actuating mechanism at a selected time period after swallowing the capsule. The time period can be correlated to a typical transit time or range of transit times for food moving through the user's GI tract to a particular location in the tract such as the small intestine. External activation can be done by any number of means including radio control means (e.g., using an RF communication device), magnetic means (e.g., by use of miniature magnetic switch or release built into the swallowable device that the user activates with an external magnetic) or acoustic means (e.g., via an ultrasonic transmission device and an acoustical receive and/or switch built into the swallowable device).

[0042] Another aspect of the invention provides therapeutic agent preparations such as various clotting factors for delivery into the wall of the small intestine (including surrounding tissue such as the peritoneal wall or peritoneal cavity) or other wall in the intestinal tract using embodiments of the swallowable device described herein. The preparation comprises a therapeutically effective dose of at least one therapeutic agent such as a clotting factor or other coagulation protein. Also, it may comprise a solid, liquid or combination of both and can include one or more pharmaceutical excipients. The preparation has a shape and material consistency to be contained in embodiments of the swallowable capsule, delivered from the capsule into the intestinal wall, peritoneum, peritoneal cavity wall or other surrounding tissue and degrade within the intestinal wall or surrounding tissue such as the peritoneum or peritoneal cavity and release the dose of therapeutic agent. In particular embodiments, the preparation is configured to degrade within the fluids of the peritoneum or peritoneal cavity such that the clotting factor or other therapeutic agent is dispersed along the serous membranes of the visceral and/or parietal peritoneum. The preparation may also have a selectable surface area to volume ratio so as enhance or otherwise control the rate of degradation of the preparation in the wall of the small intestine or surrounding tissue such as the peritoneum (e.g., the visceral peritoneum) and peritoneal cavity or other body lumen. In various

embodiments, the preparation can be configured to be coupled to an actuator such as a release element or actuation mechanism which has a first configuration in which the preparation is contained in the capsule and a second configuration in which the preparation is advanced out of the capsule and into the wall of the small intestine and/or peritoneum. The dose of the drug or other therapeutic agent in the preparation can be titrated downward from that which would be required for conventional oral delivery methods so that potential side effects from the drug can be reduced.

[0043] Typically, though not necessarily, the preparation will be shaped and otherwise configured to be contained in the lumen of a tissue penetrating member, such as a hollow needle, which is configured to be advanced out of the capsule and into the wall of the small intestine and/or peritoneum (e.g., the visceral peritoneum) or peritoneal cavity. The preparation itself may comprise a tissue penetrating member configured to be advanced into the wall of the small intestine and/or peritoneal wall, or other lumen in the intestinal tract. Such configurations of the tissue penetrating member may include various shapes having a pointed tip including for example, needles, darts, and other like shapes. In particular embodiments the tissue penetrating member comprises various elongated shapes having a pointed end. It may also comprise various isometric shapes having a pointed end, such as a triangle, square with pointed end, conical with a pointed end, or hemispherical with a pointed end.

[0044] Another aspect of the invention provides methods for the delivery of drugs and the therapeutic agents into the walls of the GI tract using embodiments of the swallowable drug delivery devices. Such methods can be used for the delivery of therapeutically effective amounts of a variety of drugs and other therapeutic agents. These include a number of large molecule peptides and proteins which would otherwise require injection due to chemical breakdown in the stomach e.g., clotting factors, antibodies, growth hormone, parathyroid hormone, insulin, interferons and other like compounds. Suitable drugs and other therapeutic agents which can be delivered by embodiments of invention include various clotting factors (e.g., Factor VIII) antibodies (TNF inhibiting class of antibodies, chemotherapeutic agents, (e.g., interferon), antibiotics, antivirals, insulin and related compounds, glucagon like peptides (e.g., GLP-1, Exenatide), parathyroid hormones, growth hormones (e.g., IGF and other growth factors), anti-seizure agents, immune suppressant agents and anti-parasitic agents such as various anti-malarial agents. The dosage of the particular drug can be titrated for the patient's weight, age, condition or other parameter.

[0045] In various method embodiments of the invention, embodiments of the drug swallowable drug delivery device can be used to deliver a plurality of drugs for the treatment of multiple conditions or for the treatment of a particular condition (e.g., a mixture of protease inhibitors for treatment of HIV/AIDS). In use, such embodiments allow a patient to forgo the necessity of having to take multiple medications for a particular condition or conditions. Also, such embodiments provide a means for ensuring that a regimen of two or more drugs is delivered and absorbed into the small intestine and thus, the blood stream at about the same time. Due to differences in chemical makeup, molecular weight, etc., drugs can be absorbed from the intestine through the intestinal wall at different rates, resulting in different pharmacokinetic distribution curves. Embodiments of the invention address this issue by injecting the desired drug

mixtures directly into the intestinal wall at about the same time. This in turn improves (e.g., by substantially synchronizing e.g., within 5% in time) the pharmacokinetic parameters for the mixture of the selected drugs (e.g., by achieving similar T½'s for different drugs) and thus, the efficacy of the selected mixture of drugs.

[0046] In another aspect, various embodiments of the invention provide pharmaceutical compositions comprising solid shaped masses comprising a drug such as a clotting factor or antibody having a biological in the body of a mammal wherein at least a portion of the biological activity of the clotting factor (or other coagulation protein) is maintained after formation of the shaped mass from a precursor material such as powder. For the case of clotting factors, the biological activity may correspond to promotion or acceleration of the clotting process including promoting the activation of one or more clotting factors (e.g., promotion of Factor X activation as is the case for Factor VIII). For the case of an antibody, the biological activity may correspond to binding affinity to an antigen. The biological activity may be correlated to the structural integrity of the clotting factor (e.g., not having cleavage of any functional groups) or other coagulation protein or other drug post formation (e.g., by correlating bioactivity assays to chemical assays), such that on a compositional level, a selected percentage of the clotting factor or other coagulation protein (e.g., on a weight basis) is maintained post formation relative to that in the precursor material. Typically, the shape will be formed by a compression process (e.g., compression molding), though other processes are also contemplated such as non-compressive molding or 3-D printing. The drug may correspond to a peptide, clotting factor or other coagulation protein, immunoglobulin or other protein wherein the biological activity of the drug in the shaped mass is at least 70% to that prior to compression and more preferably, at least 90 % to that prior to compression and still more preferably, at least 95%. These numbers may also correspond to a weight percentage of the drug remaining in the shaped mass relative to that in the precursor material (e.g., by correlating biological activity assays to chemical assays for weight composition as described above). In these and related embodiments, the shaped mass can have a density in a range of about 1.00 and 1.15 mg/mm^3 and in more preferred embodiments, 1.02 and 1.06 mg/mm^3. The shape will typically comprise a pellet shape but may also have a tablet, conical, cylindrical, cube, sphere or other like shape. Typically the pellet or other form of the shaped mass will then be inserted into an embodiment of the tissue penetrating member described herein.

[0047] Embodiments of the invention also provide methods for forming solid shaped masses comprising immunoglobulins, clotting factors, or other clotting proteins where the shaped masses are formed by the shaping of a precursor material and where at least a portion of the biological activity (e.g., antigen binding affinity, specificity, etc.) of the peptide, clotting factor or other coagulation protein in the shaped mass is preserved after formation. In many embodiments, the shaping is done by compression of the precursor material where the compressive forces are selected to minimize degradation of the biological activity of the protein or polypeptide. Other shaping methods are also contemplated such as non-compression molding and 3-D printing. Typically, the precursor material will comprise a powder mixture

comprising the drug and one or more excipients. The precursor material may also comprise a liquid, slurry or paste. The excipients may include one more of a lubricant, a binder, bulking agent, etc. The shaped mass may be in the form of a tablet, micro-tablet, pill or slug shape. According to one or more embodiments, the shaped masses produced using embodiments of the formation process can have another property such as density or particle grain size (of the powder used to formulate the shaped mass) which is correlated to minimum level of bioactivity of the protein or peptide. Also, that correlated property may be consistently maintained within a selected range within a given lot of shaped masses as well as from lot to lot. Embodiments of the solid masses described herein can be configured to be used in combination with any suitable drug delivery system to be administered via any appropriate route of administration for the condition to be treated. Such routes of administration can include without limitation, oral, sublingual, parenteral, intravenous, intramuscular, transdermal, intra-ventricular, intra-cardiac, or intracranial. For example, according to one embodiment, clotting factor containing micro-tablets (e.g., a microtablet containing Factor VII, VIII, etc.) can be taken orally and delivered into the small intestine where the clotting factor is delivered into the wall of the small intestine and subsequently into the peritoneum and peritoneal cavity where the tablet(s) dissolves to release the clotting factor. In another embodiment, micro tablets can be injected or otherwise placed subcutaneously (e.g., intramuscularly) where they dissolve to release clotting factor or other coagulation protein into the bloodstream.

[0048] The following numbered clauses describe other examples, aspects, and embodiments of the inventions described herein:

[0049] 1. A therapeutic preparation for treatment of a clotting disorder in a patient, the preparation comprising a 100IU/kg body weight dosage of a stabilized form of Factor VIII (FVIII) or Factor VIII analogue (FVIIIA) in solid form, the preparation shaped as a solid tissue penetrating member configured to penetrate an intestinal wall of the patient and be inserted into a peritoneal cavity of the patient after oral ingestion by the application of force on the tissue penetrating member, wherein after insertion, the tissue penetrating member is retained in the peritoneal cavity where it is degraded in the serosal fluids of peritoneal cavity to release the stabilized form of FVIII or FVIIIA into the blood stream so as to produce a plasma concentration-time curve characterized by at least one pharmacokinetic parameter selected from the group consisting of $T_{½}$, T_{max}, area under the curve (AUC), bioavailability, or a ratio of a rising curve portion to falling curve portion.

[0050] 2. The preparation of clause 0, wherein the $T_{½}$ is in a range of about 14 to 18.75 hours.

[0051] 3. The preparation of clause 2, wherein the $T_{½}$ is in a range of about 14 to 16 hours.

[0052] 4. The preparation of clause 3, wherein the $T_{½}$ is about 15 hours.

[0053] 5. The preparation of clause 1, wherein the $T_{½}$ is in a range of about 16.25 to 27.13 hours.

[0054] 6. The preparation of clause 5, wherein the $T_{½}$ is in a range of about 21 to 22 hours.

[0055] 7. The preparation of clause 6, wherein the $T_{½}$ is about 21.7 hours.

[0056] 8. The preparation of clause 1, wherein the T_{max} is in a range of about 10 to 11 hours.

[0057] 9. The preparation of clause 8, wherein the T_{max} is about 10.4 hours.

[0058] 10. The preparation of clause 1, wherein the AUC is in a range of about 11 to 39 (IU*h)/mL.

[0059] 11. The preparation of clause 10, wherein the AUC is about 20 (IU*h)/mL.

[0060] 12. The preparation of clause 1, wherein the AUC is in a range of about 17 to 60 (IU*h)/mL.

[0061] 13. The preparation of clause 12, wherein the AUC is about 20 (IU*h)/mL.

[0062] 14. The preparation of clause 1, wherein a ratio of the rising portion to the falling portion of the curve is about 1:5.

[0063] 15. The preparation of clause 1, wherein a ratio of the rising portion to the falling portion of the curve is about 1:11.

[0064] 16. The preparation of clause 1, wherein the FVIII or FVIIIA in the stabilized form has been chemically modified.

[0065] 17. The preparation of clause 16, wherein the FVIII or FVIIIA in the stabilized form has been modified by PEGylation.

[0066] 18. The preparation of clause 16, wherein the FVIII or FVIIIA in the stabilized form has been chemically complexed with Von Willebrand factor.

[0067] 19. The preparation of clause 16, wherein the FVIII or FVIIIA in the stabilized form has been modified by Fc-fusion.

[0068] 20. The preparation of clause 1, further comprising a stabilizing excipient.

[0069] 21. The preparation of clause 20, wherein the stabilizing excipient comprises at least one of calcium, Von Willebrand factor (VWF), heparin, albumin, DFP.

[0070] 22. The preparation of clause 20, wherein the stabilizing excipient comprises Von Willebrand factor present in a 1:1 molar ratio with the dosage of Factor VIII.

[0071] 23. The preparation of clause 1, further comprising an anti-aggregation agent.

[0072] 24. The preparation of clause 23, wherein a production of inhibitor antibodies to the released FVIII or FVIIIA is minimized due to reduced aggregation of FVIII or FVIIIA molecules.

[0073] 25. The preparation of clause 23, wherein at least one of the bioavailability, AUC, or C_{max} is increased due to reduced aggregation of FVIII or FVIIIA molecules.

[0074] 26. The preparation of clause 25, wherein the at least one of said pharmacokinetic parameters is increased by at least about 10%.

[0075] 27. The preparation of clause 23, wherein the anti-aggregation agent comprises at least one of arginine, glutamic acid, leucine, trehalose or Pluronic F68.

[0076] 28. The preparation of clause 27, wherein the anti-aggregation agent comprises trehalose and a weight ratio of the anti-aggregation to the FVIII or FVIIIA is in a range of about of 1:25 to 25:1.

[0077] 29. The preparation of clause 23, wherein the anti-aggregation agent comprises an arginine, glutamic acid, leucine and a weight ratio of the anti-aggregation to the FVIII or FVIIIA is in a range of about of 1:15 to 15:1.

[0078] 30. The preparation of clause 23, wherein the anti-aggregation agent comprises Pluronic F68 and a weight ratio of the anti-aggregation to the FVIII or FVIIIA is in a range of about of 1:5.

[0079] 31. The preparation of clause 1, wherein the preparation comprises an agent configured to enhance a permeability of a peritoneal wall to the FVIII or FVIIIA.

[0080] 32. The preparation of clause 32, wherein the permeability enhancing agent is hyaluronidase.

[0081] 33. The preparation of clause 32, wherein a weight ratio of hyaluronidase to the FVIII or FVIIIA is in a range of about 1:50 to 50:1.

[0082] 34. The preparation of clause 32, wherein the permeability enhancing agent enhances uptake of the FVIII or FVIIIA into the patient's lymphatic tissue.

[0083] 35. The preparation of clause 32, wherein at least one of a bioavailability, AUC, or C_{max} is increased due to the increased permeability of the peritoneal wall.

[0084] 36. The preparation of clause 35, wherein the at least one of said pharmacokinetic parameters is increased in a range of about 8 to 12%.

[0085] 37. The preparation of clause 36, wherein the at least one of said pharmacokinetic parameters is increased at least about 10%

[0086] 38. The preparation of clause 1, wherein the FVIII or FVIIIA is recombinantly modified FVIII or FVIIIA.

[0087] 39. The preparation of clause 38, wherein the recombinantly modified FVIII or FVIIIA is modified from a wild type version of FVIII.

[0088] 40. The preparation of clause 38, wherein the recombinantly modified FVIII or FVIIIA includes deletions in the B-domain of the FVIII or FVIIIA molecule.

[0089] 41. The preparation of clause 1, wherein the FVIII or FVIIIA in the stabilized form has been modified by via Fc fusion.

[0090] 42. The preparation of clause 1, wherein the tissue penetrating member is structured as a shaft having a pointed end.

[0091] 43. The preparation of clause 42, wherein the tissue penetrating member has a dart like or needle like structure.

[0092] 44. The preparation of clause 1, wherein the force is a mechanical force.

[0093] 45. A therapeutic preparation for treatment of a clotting disorder in a patient, the preparation comprising a clotting factor in solid form, the preparation shaped as a tissue penetrating member at least a portion of a surface of the tissue penetrating member including a coagulant promoting coating, the tissue penetrating member configured to penetrate an intestinal wall of the patient and be inserted into a peritoneal cavity of the patient after oral ingestion by the application of force on the tissue penetrating member, wherein the coagulant promoting coating dissolves to reduce or prevent bleeding at a site of tissue penetration and wherein the tissue penetrating member is retained in the peritoneal cavity where it is degraded in the serosal fluids of the peritoneal cavity to release the clotting factor into the blood stream to treat the clotting disorder.

[0094] 46. The preparation of clause 45, wherein the coagulating promoting coating comprises the clotting factor.

[0095] 47. The preparation of clause 45, wherein the tissue penetrating member is structured as a shaft having a pointed end.

[0096] 48. The preparation of clause 45, wherein the clotting factor comprises Factor VIII or a Factor VIII analogue.

[0097] 49. A method for treating a clotting disorder in a patient, the method comprising: providing in solid form, a 100IU/kg body weight dosage of a stabilized form of Factor VIII (FVIII) or Factor VIII analogue (FVIIIA), the solid form dosage of FVIII or FVIIIA shaped as a tissue penetrating member; penetrating the solid dosage of FVIII or FVIIIA through an intestinal wall and into the peritoneal cavity after oral ingestion by the application of force on the tissue penetrating member such that the tissue penetrating member is delivered into the peritoneal cavity; releasing a therapeutically effective dose of FVIII or FVIIIA into the blood stream from the solid dosage CF in the peritoneal cavity to treat the clotting disorder; and wherein the release of the FVIII or FVIIIA into the blood stream produces a plasma concentration-time curve characterized by at least one pharmacokinetic parameter selected from the group consisting of $T_{½}$, T_{max}, C_{max}, area under the curve (AUC), bioavailability, or a ratio of a rising curve portion to falling curve portion.

[0098] 50. The method of clause 49, wherein the $T_{½}$ is in a range of about 14 to 18.75 hours.

[0099] 51. The method of clause 50, wherein the $T_{½}$ is in a range of about 14 to 16 hours.

[0100] 52. The method of clause 51, wherein the $T_{½}$ is about 15 hours.

[0101] 53. The method of clause 49, wherein the $T_{½}$ is in a range of about 16.25 to 27.125 hours.

[0102] 54. The method of clause 53, wherein the $T_{½}$ is in a range of about 21 to 22 hours.

[0103] 55. The method of clause 54, wherein the $T_{½}$ is about 21.7 hours.

[0104] 56. The method of clause 49, wherein the T_{max} is in a range of about 10 to 11 hours.

[0105] 57. The method of clause 56, wherein the T_{max} is about 10.4 hours.

[0106] 58. The method of clause 49, wherein the AUC is in a range of about 11 to 39 (IU*h)/mL.

[0107] 59. The method of clause 58, wherein the AUC is about 20 (IU*h)/mL.

[0108] 60. The method of clause 49, wherein the AUC is in a range of about 17 to 60 (IU*h)/mL.

[0109] 61. The method of clause 60, wherein the AUC is about 20 (IU*h)/mL.

[0110] 62. The method of clause 49, wherein a ratio of the rising portion to the falling portion of the curve is about 1:5.

[0111] 63. The method of clause 49, wherein a ratio of the rising portion to the falling portion of the curve is about 1:11.

[0112] 64. The method of clause 49, wherein the FVIII or FVIIIA in the stabilized form has been chemically modified.

[0113] 65. The method of clause 64, wherein the FVIII or FVIIIA in the stabilized form has been modified by PEGylation.

[0114] 66. The method of clause 49, wherein the FVIII or FVIIIA in the stabilized form has been chemically complexed with Von Willebrand factor.

[0115] 67. The method of clause 49, wherein the FVIII or FVIIIA in the stabilized form has been modified by Fc-fusion.

[0116] 68. The method of clause 49, wherein the AUC is about 20 (IU*h)/mL.

[0117] 69. The method of clause 49, wherein a ratio of the rising portion to the falling portion of the curve is about 1:5.

[0118] 70. The method of clause 49, wherein a ratio of the rising portion to the falling portion of the curve is about 1:11.

[0119] 71. The method of clause 49, wherein the FVIII or FVIIIA in the stabilized form has been chemically modified.

[0120] 72. The method of clause 71, wherein the FVIII or FVIIIA in the stabilized form has been modified by PEGylation.

[0121] 73. The method of clause 71, wherein the FVIII or FVIIIA in the stabilized form has been chemically complexed with Von Willebrand factor.

[0122] 74. The method of clause 71, wherein the FVIII or FVIIIA in the stabilized form has been modified by Fc-fusion.

[0123] 75. The method of clause 49, wherein the therapeutically effective dose of FVIII or FVIIIA is released into the blood stream by degradation of the solid dosage of FVIII or FVIIIA in the serosal fluids of the peritoneal cavity.

[0124] 76. The method of clause 49, wherein the tissue penetrating member includes a degradation feature configured to enhance a rate of degradation of the tissue penetrating member in the serosal fluids of the peritoneal cavity.

[0125] 77. The method of clause 49, wherein the surrounding tissue is a peritoneal wall or peritoneal cavity.

[0126] 78. The method of clause 49, wherein the surrounding tissue is the peritoneal cavity, the method further comprising: releasing the FVIII or FVIIIA into the blood stream from peritoneal cavity.

[0127] 79. The method of clause 49, further comprising: monitoring a clotting time in the patient.

[0128] 80. The method of clause 79, further comprising: adjusting a dose of the FVIII or FVIIIA in a subsequent solid form dosage response to the monitored clotting time in the patient.

[0129] 82. The method of clause 80, wherein the clotting time test is monitored using a prothrombin time test.

[0130] 84. The method of clause 79 further comprising: decreasing a dose of the orally ingested clotting factor when the clotting time in the patient falls below a threshold level.

[0131] 85. The method of clause 84, wherein the threshold level is in a range of about 25 to 30 seconds.

[0132] 86. The method of clause 49, further comprising delivering the solid dosage clotting factor to a section of the small intestine wherein an immune response in the patient to the delivered clotting factor is reduced.

[0133] 87. The method of clause 86, wherein said section of the small intestine includes that without Peyer's Patches.

[0134] 88. The method of clause 86, wherein a production of inhibitor antibodies to the released FVIII or FVIIIA is minimized or eliminated.

[0135] 89. The method of clause 86, wherein said section of the small intestine is the duodenum or jejunum.

[0136] 90. The method of clause 86, wherein a serum titer of patient inhibitor antibodies to the clotting factor is increased by no more than about 10% in response to release of the clotting factor into the patient's blood stream.

[0137] 91. The method of clause 86, wherein a serum titer of interleukin-7 is increased by no more than about 10% in response to release of the clotting factor into the patient's blood stream.

[0138] 92. The method of clause 49, wherein an immune response in the patient to the clotting factor is reduced as compared to delivery of the clotting factor by an intramuscular or sub-dermal injection.

[0139] 93. The method of clause 92, wherein the immune response in the patient to the clotting factor is reduced by an amount in the range of about two to thirty times as compared to an intramuscular or sub-dermal injection.

[0140] 94. The method of clause 49, wherein the preparation comprises an anti-aggregation agent.

[0141] 95. The method of clause 94, wherein a production of inhibitor antibodies to the released FVIII or FVIIIA is minimized due to reduced aggregation of FVIII or FVIIIA molecules.

[0142] 96. The method of clause 94, wherein at least one of the bioavailability, AUC, or C_{max} is increased due to reduced aggregation of FVIII or F molecules.

[0143] 97. The method of clause 96, wherein the at least one of said pharmacokinetic parameters is increased by at least about 10%.

[0144] 98. The method of clause 96, wherein the anti-aggregation agent comprises at least one of arginine, glutamic acid, leucine, trehalose or Pluronic F68.

[0145] 99. The method of clause 49, wherein the preparation incudes an agent configured to enhance a permeability of a peritoneal wall to the FVIII or FVIIIA.

[0146] 100. The method of clause 99, wherein the permeability enhancing agent is hyaluronidase

[0147] 101. The method of clause 99, wherein the permeability enhancing agent enhances uptake of the FVIII or FVIIIA into the patient's lymphatic tissue.

[0148] 102. The method of clause 99, wherein at least one of a bioavailability, AUC, or C_{max} is increased due to the increased permeability of the peritoneal wall.

[0149] 103. The method of clause 102, wherein the at least one of said pharmacokinetic parameters is increased by at least about 10%.

[0150] 104. The method of clause 103, wherein the at least one of said pharmacokinetic parameters is increased in a range of about 8 to 12%.

[0151] Further details of these and other embodiments and aspects of the invention are described more fully below, with reference to the attached drawing figures.

BRIEF DESCRIPTION OF THE DRAWINGS

[0152] Fig. 1A is a lateral viewing showing an embodiment of a swallowable drug delivery device.

[0153] Fig. 1B is a lateral viewing showing an embodiment of a system including a swallowable drug delivery device.

[0154] Fig. 1C is a lateral viewing showing an embodiment of a kit including a swallowable drug delivery device and a set of instructions for use.

[0155] Fig. 1D is a lateral viewing showing an embodiment of a swallowable drug delivery device including a drug reservoir.

[0156] Fig. 2 is a lateral view illustrating an embodiment of the swallowable drug delivery device having a spring-loaded actuation mechanism for advancing tissue penetrating members into tissue.

[0157] Fig. 3 is a lateral view illustrating an embodiment of the swallowable drug delivery device having a spring-loaded actuation mechanism having a first motion converter.

[0158] Fig. 4 is a lateral view illustrating an embodiment of the swallowable drug delivery device having a spring-loaded actuation mechanism having first and a second motion converter.

[0159] Fig. 5 is a perspective view illustrating engagement of the first and second motion converters with the tissue penetrating member and delivery members.

[0160] Fig. 6 is a cross sectional view illustrating an embodiment of the swallowable drug delivery device having a single tissue penetrating member and an actuating mechanism for advancing the tissue penetrating member.

[0161] Fig. 7A is a cross sectional view illustrating an embodiment of the swallowable drug delivery device having multiple tissue penetrating members and an actuating mechanism for advancing the tissue penetrating members.

[0162] Fig. 7B is a cross sectional view illustrating deployment of the tissue penetrating members of the embodiment of Fig. 7A to deliver medication to a delivery site and anchor the device in the intestinal wall during delivery.

[0163] Figs. 8A-8C are side views illustrating positioning of the drug delivery device in the small intestine and deployment of the tissue penetrating members to deliver drug; Fig. 8A shows the device in the small intestine prior to deployment of the tissue penetrating members with the release element in tact; Fig. 8B shows the device in the small intestine with the release element degraded and the tissue penetrating elements deployed; and Fig. 8C shows the device in the small intestine with the tissue penetrating elements retracted and the drug delivered.

[0164] Fig. 9A shows an embodiment of a swallowable drug delivery device including a capsule having bio-degradable seams positioned to produce controlled degradation of the capsule in the GI tract.

[0165] Fig. 9B shows the embodiment of Fig. 9A after having been degraded in the GI tract into smaller pieces.

[0166] Fig. 10 shows an embodiment of a capsule having biodegradable seams including pores and/or perforations to accelerate biodegradation of the capsule.

[0167] Fig. 11 is a lateral viewing illustrating use of an embodiment of a swallowable drug delivery device including transit of device in the GI tract and operation of the device to deliver drug.

[0168] Fig. 11A-11E are lateral views illustrating delivery of the tissue penetrating member through the wall of the small intestine and into peritoneal cavity so as to release clotting factor or other drug into the blood stream.

[0169] Figs. 12A and 12B are lateral views illustrating an embodiment of a capsule for the swallowable drug delivery device including a cap and a body coated with pH sensitive biodegradable coatings, Fig. 12A shows the capsule in an unassembled state and Fig. 12B in an assembled state.

[0170] Figs. 13A and 13B illustrate embodiments of unfolded multi balloon assemblies containing a deployment balloon, an aligner balloon, a delivery balloon and assorted connecting tubes; Fig. 13A shows an embodiment of the assembly for a single dome configuration of the deployment balloon; and Fig. 13B shows an embodiment of the assembly for dual dome configuration of the deployment balloon.

[0171] Figs. 13C is a perspective views illustrating embodiments of a nested balloon configuration which can be used for one or more embodiments of the balloons described herein including the aligner balloon.

[0172] Figs. 14A-14C are lateral views illustrating embodiments of a multi compartment deployment balloon; Fig. 14A shows the balloon in a non-inflated state with the separation valve closed; Fig. 14B shows the balloon with valve open and mixing of the chemical reactants; and Fig. 14C shows the balloon in an inflated state.

[0173] Figs. 15A-15G are lateral views illustrating a method for folding of the multiple balloon assembly, the folding configuration in each figure applies to both single and dual dome configurations of the deployment balloon, with the exception that Fig. 15C, pertains to a folding step unique to dual dome configurations; and Fig. 15D, pertains to the final folding step unique to dual dome configurations; Fig. 15E, pertains to a folding step unique to single dome configurations; and Figs. 15F and 15G are orthogonal views pertaining to the final folding step unique to single dome configurations.

[0174] Figs. 16A and 16B are orthogonal views illustrating embodiments of the final folded multi balloon assembly with the attached delivery assembly.

[0175] Figs. 17A and 17B are orthogonal transparent views illustrating embodiments of the final folded multi balloon assembly inserted into the capsule.

[0176] Fig. 18A is a side view of an embodiment of the tissue penetrating member.

[0177] Fig. 18B is a bottom view of an embodiment of the tissue penetrating member illustrating placement of the tissue retaining features.

[0178] Fig. 18C is a side view of an embodiment of the tissue penetrating member having a trocar tip and inverted tapered shaft.

[0179] Fig. 18D is a side view of an embodiment of the tissue penetrating member having a separate drug containing section.

[0180] Figs. 18E and 18F are side views showing assembly of an embodiment of a tissue penetrating member having a shaped drug containing section. Fig. 18E shows the tissue penetrating member and shaped drug section prior to assembly; and Fig. 18F after assembly.

[0181] Figs. 18G-18I illustrate embodiments of the tissue penetrating member having degradation/dissolution feature for enhancing degradation and/or dissolution of the tissue penetrating member in tissue fluids; Fig18G is a perspective view illustrating a degradation/dissolution feature in the form of one or more apertures going partly or all the way through the tissue penetrating member; Fig 18H and18I are side and cross sectional views respectively, illustrating a degradation/dissolution feature in the form of one more grooves or channels on the surface of the tissue penetrating member; Fig. 18H also illustrates an embodiment of the tissue penetrating member with a coating of clotting factor placed on at least a portion of its surface so as to rapidly dissolve and prevent or reduce bleed at the tissue site where the tissue penetrating member penetrates.

[0182] Fig. 19 provides assorted views of the components and steps used to assemble an embodiment of the delivery assembly.

[0183] Figs. 20A– 20I provide assorted views illustrating a method of operation of an embodiment of the swallowable device to delivery medication to the intestinal wall.

[0184] Fig. 21 is a graph of plasma concentration vs time, illustrating pharmacokinetic parameters and the shape of a plasma concentration-time curve (also referred to as a plasma concentration-time profile or plasma concentration-time curve) for the delivery of a therapeutic agent using an embodiment of the swallowable capsule described herein.

[0185] Fig. 22 is a predictive plasma concentration-time profile for delivery of PEGylated FVIII (100 IU/kg body weight) using an embodiment of the swallowable device described herein.

[0186] Fig. 23 is a predictive plasma concentration-time profile for delivery of ESPEROCT (100 IU/kg body weight) using an embodiment of the swallowable capsule described herein.

[0187] Figs. 24A and 24B are predictive plasma concentration-time profile for Alirocumab delivered daily by embodiments of the swallowable capsule (Fig. 24B); and monthly by injection using conventional means (Fig. 24A).

[0188] Fig. 25A is a plot of FVIII activity vs time for intraperitoneal (IP) delivery of PEGylated FVIII at dosages of 150 IU/kg body weight and 300 IU/kg body weight, compared with FVIII activity vs time achieved by IV delivery at dosage of 30 IU//kg body weight.

[0189] Fig. 25B is an enlarged view of the circled area in Fig. 25A.

[0190] Figs 26A-26C are plots of PEGylated FVIII concentration and PEGylated FVIII activity vs time for IP delivery at a dosage of 300 IU/kg at day 0 (Fig 26A), 150 IU/kg at day 10 (Fig 26B), and for IV delivery at day 5 at a dosage of 30 IU/kg (Fig 26C).

[0191] Fig. 27A is a plot of PEGylated FVIII concentration vs time for IP delivery of at dosages of 150 IU/kg and 300 IU/kg and for an IV route of delivery at dosage of 30 IU/kg.

[0192] Fig. 27B is an enlarged view of the circled area in Fig. 27A.

[0193] Fig. 28A is a plot of a whole blood clotting time (WBCT) vs time for IP delivery of PEGylated FVIII at dosages of 150 IU/kg and 300 IU/kg and for an IV route of delivery at dosage of 30 IU//kg.

[0194] Fig. 28B is an enlarged view of the circled area in Fig. 28A.

[0195] Fig. 29 is a plot of activated partial thromboplastin time (aPTT) vs time for IP delivery of PEGylated FVIII at IP dosages of 150 IU/kg and 300 IU/kg and for an IV route of delivery at dosage of 30 IU//kg.

[0196] Figs 30A-30C are PD-PK plots of activated partial thromboplastin times (PD) and PEGylated FVIII activity (PK) at IP dosages of 150 IU/kg and 300 IU/kg and for an IV route of delivery at dosage of 30 IU/kg.

[0197] Fig. 31 is a plot of immunogenicity.

DETAILED DESCRIPTION

[0198] Embodiments of the invention provide devices, systems and methods for delivering medications in to various locations in the body as well as therapeutic compositions comprising the medication. As used herein, the term “medication” refers to a medicinal preparation in any form which can include one more drugs or other therapeutic agent as well as one or more pharmaceutical excipients. Many embodiments provide a swallowable device for delivering medication within the GI tract including into the wall of the small intestine. Particular embodiments provide a swallowable device such as a capsule for delivering medications such as a clotting factor for the treatment of a clotting disorder into the wall of the small intestine and/or peritoneum and/or peritoneal cavity or other GI organ. As used herein, “GI tract” refers to the esophagus, stomach, small intestine, large intestine and anus, while “Intestinal tract” refers to the small and large intestine. Also, as used herein the term “peritoneum” refers to one or both of the visceral peritoneum and parietal peritoneum and is interchangeable with the term peritoneal wall. Further as used herein, the term peritoneal cavity refers to the space between the parietal peritoneum and the visceral peritoneum. Also, as used herein, the term “about” means within 10% of a given stated numerical value for a parameter, variable, dimension, and the like (e.g., a pharmacokinetic parameter such as $T_{½}$, T_{max}, C_{max}, etc.), and more preferably, though necessarily, within 5%.

[0199] Referring now to Figs. 1-11, an embodiment of a device 10 for the delivery of medication 100 to a delivery site DS in the intestinal tract such as the wall of the small intestine and/or peritoneal wall or peritoneal cavity, comprises a capsule 20 including at least one guide tube 30, one or more tissue penetrating members 40 positioned or otherwise advanceable in the at least one guide tube, a delivery

member 50, an actuating mechanism 60 and release element 70. Medication 100, also described herein as preparation 100, typically comprises at least one drug or therapeutic agent 101 and may include one or more pharmaceutical excipients known in the art. Collectively, one or more of delivery member 50 and mechanism 60 may comprise a means for delivery of medication 100 into a wall of the intestinal tract. Other delivery means contemplated herein include one or more expandable balloons (e.g., delivery balloon 172) or other expandable device/member described herein.

[0200] Device 10 can be configured for the delivery of liquid, semi-liquid or solid forms of medication 100 or all three. Solid forms of medication/preparation 100 can include both powder and pellet. Semi liquid forms can include a slurry or paste. Whatever the form, preparation 100 desirably has a shape and material consistency allowing the medication to be advanced out of the device, into the intestinal wall (or other luminal wall in the GI tract) and then degrade in the intestinal wall to release the drug or other therapeutic agent 101 which in various embodiments may correspond to one or more clotting factors for the treatment of Hemophilia or other clotting disorders as described herein. For example Factor VIII, for the treatment of Hemophilia A and Factor IX for the treatment of Hemophilia B. The material consistency of the preparation can include one or more of the hardness, porosity and solubility of the preparation (in body fluids) as well its shape, having a tissue penetrating end for penetrating through the intestinal wall and into the peritoneal cavity. The material consistency can be achieved by one or more of the following: i) the compaction force used to make the preparation; ii) the use of one or more pharmaceutical disintegrants known in the art; iii) use of other pharmaceutical excipients; iv) the particle size and distribution of the preparation (e.g., micronized particles); and v) use of micronizing and other particle formation methods known in the art. Suitable shapes for preparation 100 can include cylindrical, cubical, rectangular, conical, spherical, hemispherical and combinations thereof. Also, the shape can be selected so as to define a particular surface area and volume of preparation 100 and thus, the ratio between the two. The ratio of surface area to volume can in turn, be used to achieve a selected rate of degradation within the intestinal or other lumen wall within the GI tract. Larger ratios (e.g., larger amounts of surface area per unit volume) can be used to achieve faster rates of degradation and vice versa. In particular embodiments, the surface area to volume ratio can be in the range of about 1:1 to 100:1, with specific embodiments of 2:1, 5:1, 20:1, 25:1, 50:1 and 75:1 (about being within 5%). Preparation/medication 100 will typically be pre-packed within a lumen 44 of tissue penetrating members 40, but can also be contained at another location within an interior 24 of capsule 20, or in the case of a liquid or semi-liquid, within an enclosed reservoir 27. The medication can be pre-shaped to fit into the lumen or packed for example, in a powder form. Typically, the device 10 will be configured to deliver a single drug 101 as part of medication 100. However in some embodiments, the device 10 can be configured for delivery of multiple drugs 101 including a first second, or a third drug which can be compounded into a single or multiple medications 100. For embodiments having multiple medications/drugs, the medications can be contained in separate tissue penetrating members 40 or within separate compartments or reservoirs 27 within capsule 20. In another embodiment, a first dose 102 of medication 100 containing a first drug 101

can be packed into the penetrating member(s) 40 and a second dose 103 of medication 100 (containing the same or a different drug 101) can be coated onto the surface 25 of capsule as is shown in the embodiment of Fig. 1B. The drugs 101 in the two doses of medication 102 and 103 can be the same or different. In this way, a bimodal pharmacokinetic release of the same or different drugs can be achieved. The second dose 103 of medication 100 can have an enteric coating 104 to ensure that it is released in the small intestine and achieve a time release of the medication 100 as well. Enteric coating 104 can include one or more enteric coatings described herein or known in the art.

[0201] A system 11 for delivery of medication 100 into the wall of the small intestine and/or peritoneal wall or other location within the GI tract, may comprise device 10, containing one or more medications 100 for the treatment of a selected condition or conditions. In some embodiments, the system may include a hand-held device 13, described herein for communicating with device 10 as is shown in the embodiment of Fig. 1B. System 11 may also be configured as a kit 14 including system 11 and a set of instructions for use 15 which are packaged in packaging 12 as is shown in the embodiment of Fig. 1C. The instructions can indicate to the patient when to take the device 10 relative to one or more events such as the ingestion of a meal or a physiological measurement such as blood glucose, cholesterol, etc. In such embodiments, kit 14 can include multiple devices 10 containing a regimen of medications 100 for a selected period of administration, e.g., a day, week, or multiple weeks depending upon the condition to be treated.

[0202] Capsule 20 is sized to be swallowed and pass through the intestinal tract. The size can also be adjusted depending upon the amount of drug to be delivered as well as the patient's weight and adult vs. pediatric applications. Capsule 20 includes an interior volume 24 and an outer surface 25 having one or more apertures 26 sized for guide tubes 30. In addition to the other components of device 10, (e.g., the actuation mechanism etc.) the interior volume can include one or more compartments or reservoirs 27. One or more portions of capsule 20 can be fabricated from various biocompatible polymers known in the art, including various biodegradable polymers which in a preferred embodiment can comprise PGLA. Other suitable biodegradable materials include various enteric materials described herein as well as lactide, glycolide, lactic acid, glycolic acid, para-dioxanone, caprolactone, trimethylene carbonate, caprolactone, blends and copolymers thereof. As is described in further detail herein, in various embodiments, capsule 20 can include seams 22 of bio-degradable material so as to controllably degrade into smaller pieces 23 which are more easily passed through the intestinal tract. Additionally, in various embodiments, the capsule can include various radio-opaque or echogenic materials for location of the device using fluoroscopy, ultrasound or other medical imaging modality. In specific embodiments, all or a portion of the capsule can include radio-opaque/echogenic markers 20m as is shown in the embodiment of Figs 1A and 1B. In use, such materials not only allow for the location of device 10 in the GI tract, but also allow for the determination of transit times of the device through the GI tract.

[0203] In preferred embodiments, tissue penetrating members 40 are positioned within guide tubes 30 which serve to guide and support the advancement of members 40 into tissue such as the wall of the small intestine and/or peritoneal wall or other portion of the GI tract. The tissue penetrating members 40 will

typically comprise a hollow needle or other like structure and will have a lumen 44 and a tissue penetrating end 45 for penetrating a selectable depth into the intestinal wall IW. Member 40 may also include a pin 41 for engagement with a motion converter 90 described herein. The depth of penetration can be controlled by the length of member 40, the configuration of motion converter 90 described herein as well as the placement of a stop or flange 40s on member 40 which can, in an embodiment, correspond to pin 41 described herein. Medication 100 will typically be delivered into tissue through lumen 44. In many embodiments, lumen 44 is pre-packed with the desired medication 100 which is advanced out of the lumen using delivery member 50 or other advancement means (e.g., by means of force applied to a collapsible embodiment of member 40). As an alternative, medication 100 can be advanced into lumen 44 from another location/compartment in capsule 20. In some embodiments, all or a portion of the tissue penetrating member 40 can be fabricated from medication 100 itself (e.g., clotting factors such as Factors VII, VIII, IX or X or other coagulation protein). In these and related embodiments, the medication can have a needle or dart-like structure (with or without barbs) or other elongated structure with a pointed end configured to penetrate and be retained in the intestinal wall (e.g., the wall of the small intestine) or surrounding tissue such as the peritoneal wall or peritoneal cavity) after insertion. The dart can be sized and shaped depending upon the medication, dose and desired depth of penetration into the intestinal wall. Medication 100 can be formed into darts, pellets or other shapes using various compression molding methods known in the pharmaceutical arts.

[0204] In various embodiments, device 10 can include a second 42 and a third 43 tissue penetrating member 40 as is shown in the embodiments of Figs. 7A and 7B., with additional numbers contemplated. Each tissue penetrating member 40 can be used to deliver the same or a different medication 100. In preferred embodiments, the tissue penetrating members 40 can be substantially symmetrically distributed around the perimeter 21 of capsule 20 so as to anchor the capsule onto the intestinal wall IW during delivery of medications 100. Anchoring capsule 20 in such a way reduces the likelihood that the capsule will be displaced or moved by peristaltic contractions occurring during delivery of the medication. In specific embodiments, the amount of anchoring force can be adjusted to the typical forces applied during peristaltic contraction of the small intestine. Anchoring can be further facilitated by configured some or all of tissue penetrating members 40 to have a curved or arcuate shape.

[0205] Delivery member 50 is configured to advance medication 100 through the tissue penetrating member lumen 44 and into the intestinal wall IW. Accordingly, at least a portion of the delivery member 50 is advanceable within the tissue penetrating member lumen 44 and thus member 50 has a size and shape (e.g., a piston like shape) configured to fit within the delivery member lumen 44.

[0206] In some embodiments, the distal end 50d of the delivery member (the end which is advanced into tissue) can have a plunger element 51 which advances the medication within the tissue penetrating member lumen 44 and also forms a seal with the lumen. Plunger element 51 can be integral or attached to delivery member 50. Preferably, delivery member 50 is configured to travel a fixed distance within the needle lumen 44 so as to deliver a fixed or metered dose of drug into the intestinal wall IW. This can be

achieved by one or more of the selection of the diameter of the delivery member (e.g., the diameter can be distally tapered), the diameter of the tissue penetrating member (which can be narrowed at its distal end), use of a stop, and/or the actuating mechanism. However in some embodiments, the stroke or travel distance of member 50 can be adjusted in situ responsive to various factors such as one or more sensed conditions in the GI tract. In situ adjustment can be achieved through use of logic resource 29 (including controller 29c) coupled to an electro-mechanical embodiment of actuating mechanism 60. This allows for a variable dose of medication and/or variation of the distance the medication is injected into the intestinal wall.

[0207] Actuating mechanism 60 can be coupled to at least one of the tissue penetrating member 40 or delivery member 50. The actuating mechanism is configured to advance tissue penetrating member 40 a selectable distance into the intestinal wall IW as well as advance the delivery member to deliver medication 100 and then withdraw the tissue penetrating member from the intestinal wall. In various embodiments, actuating mechanism 60 can comprise a spring-loaded mechanism which is configured to be released by release element 70. Suitable springs 80 can include both coil (including conical shaped springs) and leaf springs with other spring structures also contemplated. In particular embodiments, spring 80 can be substantially cone-shaped to reduce the length of the spring in the compressed state even to the point where the compressed length of the spring is about the thickness of several coils (e.g., two or three) or only one coil.

[0208] In particular embodiments actuating mechanism 60 can comprise a spring 80, a first motion converter 90, and a second motion converter 94 and a track member 98 as is shown in the embodiments of Figs. 2, 4 and 8A-8C. The release element 70 is coupled to spring 80 to retain the spring in a compressed state such that degradation of the release element releases the spring. Spring 80 may be coupled to release element 70 by a latch or other connecting element 81. First motion converter 90 is configured to convert motion of spring 80 to advance and withdraw the tissue penetrating member 40 in and out of the intestinal wall or other tissue. The second motion converter 94 is configured to convert motion of the spring 80 to advance the delivery member 50 into the tissue penetrating member lumen 44. Motion converters 90 and 94 are pushed by the spring and ride along a rod or other track member 98 which fits into a track member lumen 99 of converter 90. The track member 98 serves to guide the path of the converters 90. Converters 90 and 94 engage the tissue penetrating member 40 and/or delivery member 50 (directly or indirectly) to produce the desired motion. They have a shape and other characteristics configured to convert motion of the spring 80 along its longitudinal axis into orthogonal motion of the tissue penetrating member 40 and/or delivery member 50 though conversion in other directions is also contemplated. The motion converters can have a wedge, trapezoidal or curved shape with other shapes also contemplated. In particular embodiments, the first motion converter 90 can have a trapezoidal shape 90t and include a slot 93 which engages a pin 41 on the tissue penetrating member that rides in the slot as is shown in the embodiments of Figs. 2, 3 and 4. Slot 93 can also have a trapezoidal shape 93t that mirrors or otherwise corresponds to the overall shape of converter 90. Slot 93 serves to push the tissue

penetrating member 40 during the upslope portion 91 of the trapezoid and then pull it back during the down slope portion 92. In one variation, one or both of the motion converters 90 and 94 can comprise a cam or cam like device (not shown). The cam can be turned by spring 80 so as to engage the tissue penetrating and/or delivery members 40 and 50. One or more components of mechanism 60 (as well as other components of device 10) including motion converters 90 and 94 can be fabricated using various MEMS-based methods known in the art so as to allow for selected amounts of miniaturization to fit within capsule 20. Also as is described herein, they can be formed from various biodegradable materials known in the art.

[0209] In other variations, the actuating mechanism 60 can also comprise an electro-mechanical device/mechanism such as a solenoid or a piezoelectric device. In one embodiment, a piezoelectric device used in mechanism 60 can comprise a shaped piezoelectric element which has a non-deployed and deployed state. This element can be configured to go into the deployed state upon the application of a voltage and then return to the non-deployed state upon the removal of the voltage or other change in the voltage. This and related embodiments allow for a reciprocating motion of the actuating mechanism 60 so as to both advance the tissue penetrating member and then withdraw it. The voltage for the piezoelectric element can be obtained generated using a battery or a piezoelectric based energy converter which generates voltage by mechanical deformation such as that which occurs from compression of the capsule 20 by a peristaltic contraction of the small intestine around the capsule. Further description of piezoelectric based energy converters is found in U.S. Patent Application Serial No. 12/556,524 which is fully incorporated by reference herein for all purposes. In one embodiment, deployment of tissue penetrating members 40 can in fact be triggered from a peristaltic contraction of the small intestine which provides the mechanical energy for generating voltage for the piezoelectric element.

[0210] Release element 70 will typically be coupled to the actuating mechanism 60 and/or a spring coupled to the actuating mechanism; however, other configurations are also contemplated. In preferred embodiments, release element 70 is coupled to a spring 80 positioned within capsule 20 so as to retain the spring in a compressed state 85 as shown in the embodiment of Fig. 2. Degradation of the release element 70 releases spring 80 to actuate actuation mechanism 60. Accordingly, release element 70 can thus function as an actuator 70a (actuator 70 may also include spring 80 and other elements of mechanism 60). As is explained further below, release element 70 and actuator 70a have a first configuration where the therapeutic agent preparation 100 is contained within capsule 20 and a second configuration where the therapeutic agent preparation is advanced from the capsule into the wall of the small intestine and/or peritoneal wall or cavity or other luminal wall in the intestinal tract.

[0211] In many embodiments, release element 70 comprises a material configured to degrade upon exposure to chemical conditions in the small or large intestine such as pH. Typically, release element 70 is configured to degrade upon exposure to a selected pH in the small intestine, e.g., 7.0, 7.1, 7.2, 7.3, 7.4, 7.5, 7.6 8.0 or greater. The release element can also be configured to degrade within a particular range of pH such as, e.g., 7.0 to 7.5. In particular embodiments, the pH at which release element 70 degrades

(defined herein as the degradation pH) can be selected for the particular drug to be delivered so as to release the drug at a location in small intestine which corresponds to the selected pH. Further, for embodiments of device 10 having multiple medications 100, the device can include a first release element 70 (coupled to an actuating mechanism for delivering a first drug) configured to degrade at first pH and a second release element 70 (coupled to an actuating mechanism for delivering a second drug) configured to degrade at a second pH (with additional numbers of release elements contemplated for varying number of drugs).

[0212] Release element 70 can also be configured to degrade in response to other conditions in the small intestine (or other GI location). In particular embodiments, the release element 70 can be configured to degrade in response to particular chemical conditions in the fluids in the small intestine such as those which occur after ingestion of a meal (e.g., a meal containing fats, starches or proteins). In this way, the release of medication 100 can be substantially synchronized or otherwise timed with the digestion of a meal.

[0213] Various approaches are contemplated for biodegradation of release element 70. In particular embodiments, biodegradation of release element 70 from one or more conditions in the small intestine (or other location in the GI tract) can be achieved by one or more of the following approaches: i) selection of the materials for the release element, ii) the amount of cross linking of those materials; and iii) the thickness and other dimensions of the release element. Lesser amounts of cross linking and or thinner dimensions can increase the rate of degradation and vice versa. Suitable materials for the release element can comprise biodegradable materials such as various enteric materials which are configured to degrade upon exposure to the higher pH in the intestines. Suitable enteric materials include, but are not limited to, the following: cellulose acetate phthalate, cellulose acetate trimellitate, hydroxypropyl methylcellulose phthalate, polyvinyl acetate phthalate, carboxymethylethylcellulose, co-polymerized methacrylic acid/methacrylic acid methyl esters as well as other enteric materials known in the art. The selected enteric materials can be copolymerized or otherwise combined with one or more other polymers to obtain a number of other particular material properties in addition to biodegradation. Such properties can include without limitation stiffness, strength, flexibility and hardness.

[0214] In alternative embodiments, the release element 70 can comprise a film or plug 70p that fits over or otherwise blocks guide tubes 30 and retains the tissue penetrating member 40 inside the guide tube. In these and related embodiments, tissue penetrating member 40 is coupled to a spring-loaded actuating mechanism such that when the release element is degraded sufficiently, it releases the tissue penetrating member which then springs out of the guide tube to penetrate into the intestinal wall. In still other embodiments, release element 70 can be shaped to function as a latch which holds the tissue penetrating member 40 in place. In these and related embodiments, the release element can be located on the exterior or the interior of capsule 20. In the latter case, capsule 20 and/or guide tubes 30 can be configured to allow for the ingress of intestinal fluids into the capsule interior to allow for the degradation of the release element.

[0215] In some embodiments, actuating mechanism 60 can be actuated by means of a sensor 67, such as a pH sensor 68 or other chemical sensor which detects the presence of the capsule in the small intestine. Sensor 67 can then send a signal to actuating mechanism 60 or to an electronic controller 29c coupled to actuating mechanism 60 to actuate the mechanism. Embodiments of a pH sensor 68 can comprise an electrode-based sensor or it can be a mechanically-based sensor such as a polymer which shrinks or expands upon exposure to a selected pH or other chemical conditions in the small intestine. In related embodiments, an expandable/contractible sensor 67 can also comprise the actuating mechanism 60 itself by using the mechanical motion from the expansion or contraction of the sensor.

[0216] According to another embodiment for detecting that the device in the small intestine (or other location in the GI tract), sensor 67 can comprise pressure/force sensor such as strain gauge for detecting the number of peristaltic contractions that capsule 20 is being subject to within a particular location in the intestinal tract. In such embodiments capsule 20 is desirably sized to be gripped by the small intestine during a peristaltic contraction. Different locations within the GI tract have different number of peristaltic contractions. The small intestine has between 12 to 9 contractions per minute with the frequency decreasing down the length of the intestine. Thus, according to one or more embodiments, detection of the number of peristaltic contractions can be used to not only determine if capsule 20 is in the small intestine, but the relative location within the intestine as well. In use, these and related embodiments allow for release of medication 100 at a particular location in the small intestine.

[0217] As an alternative or supplement to internally activated drug delivery (e.g., using a release element and/or sensor), in some embodiments, the user may externally activate the actuating mechanism 60 to deliver medication 100 by means of RF, magnetic or other wireless signaling means known in the art. In these and related embodiments, the user can use a handheld communication device 13 (e.g., a hand-held RF device such as a cell phone) as is shown in the embodiment of Fig, 1B, to send a receive signals 17 from device 10. In such embodiments, swallowable device may include a transmitter 28 such as an RF transceiver chip or other like communication device/circuitry. Handheld device 13 may not only includes signaling means, but also means for informing the user when device 10 is in the small intestine or other location in the GI tract. The later embodiment can be implemented through the use of logic resources 29 (e.g., a processor 29) coupled to transmitter 28 to signal to detect and singe to the user when the device is in the small intestine or other location (e.g., by signaling an input from the sensor). Logic resources 29 may include a controller 29c (either in hardware or software) to control one or more aspects of the process. The same handheld device can also be configured to alert the user when actuating mechanism 60 has been activated and the selected medication 100 delivered (e.g., using processor 29 and transmitter 28). In this way, the user is provided confirmation that medication 100 has been delivered. This allows the user to take other appropriate drugs/therapeutic agents as well as make other related decisions (e.g., for diabetics to eat a meal or not and what foods should be eaten). The handheld device can also be configured to send a signal to swallowable device 10 to over-ride actuating mechanism 60 and so prevent delay or accelerate the delivery of medication 100. In use, such embodiments allow the user to intervene

to prevent, delay or accelerate the delivery of medication, based upon other symptoms and/or patient actions (e.g., eating a meal, deciding to go to sleep, exercise etc.). The user may also externally activate actuating mechanism 60 at a selected time period after swallowing the capsule. The time period can be correlated to a typical transit time or range of transit times for food moving through the user's GI tract to a particular location in the tract such as the small intestine.

[0218] In particular embodiments, the capsule 20 can include seams 22 of biodegradable material which controllably degrade to produce capsule pieces 23 of a selectable size and shape to facilitate passage through the GI tract as is shown in the embodiment of Figs. 10A and 10B. Seams 22 can also include pores or other openings 22p for ingress of fluids into the seam to accelerate biodegradation as is shown in the embodiment of Fig. 10. Other means for accelerating biodegradation of seams 22 can include pre-stressing the seam and/or including perforations 22f in the seam as is also shown in the embodiment of Fig. 10. In still other embodiments, seam 22 can be constructed of materials and/or have a structure which is readily degraded by absorption of ultrasound energy, e.g., high frequency ultrasound (HIFU), allowing the capsule to be degraded into smaller pieces using externally or endoscopically (or other minimally invasive method) administered ultrasound.

[0219] Suitable materials for seams 22 can include one or more biodegradable materials described herein such as PGLA, glycolic acid, etc. Seams 22 can be attached to capsule body 20 using various joining methods known in the polymer arts such as molding, hot melt junctions, etc. Additionally for embodiments of capsule 20 which are also fabricated from biodegradable materials, faster biodegradation of seam 22 can be achieved by one or more of the following: i) fabricating the seam from a faster biodegrading material, ii) pre-stressing the seam, or iii) perforating the seam. The concept of using biodegradable seams 22 to produce controlled degradation of a swallowable device in the GI tract can also be applied to other swallowable devices such as swallowable cameras (or other swallowable imaging device) to facilitate passage through the GI tract and reduce the likelihood of such a device becoming stuck in the GI tract. Accordingly, embodiments of biodegradable seam 22 can be adapted for swallowable imaging and other swallowable devices.

[0220] Another aspect of the invention provides methods for the delivery of drugs and other therapeutic agents (in the form of medication 100) into the walls of the GI tract using one or more embodiments of swallowable drug delivery device 10. An exemplary embodiment of such a method will now be described. The described embodiment of drug delivery occurs in the small intestine SI. However, it should be appreciated that this is exemplary and that embodiments of the invention can be used for delivering drug in a number of locations in the GI tract including the stomach and the large intestine. For ease of discussion, the swallowable drug delivery device 10 will sometimes be referred to herein as a capsule 10. As described above, in various embodiments device 10 may be packaged as a kit 11 within sealed packaging 12 that includes device 10 and a set of instructions for use 15. If the patient is using a handheld device 13, the patient may be instructed to enter data into device 13 either manually or via a bar code 18 (or other identifying indicia 18) located on the instructions 15 or packaging 12. If a bar code is

used, the patient would scan the bar code using a bar code reader 19 on device 13. After opening packaging 12, reading the instructions 15 and entering any required data, the patient swallows an embodiment of the swallowable drug delivery device 10. Depending upon the drug, the patient may take the device 10 in conjunction with a meal (before, during or after) or a physiological measurement. Capsule 20 is sized to pass through the GI tract and travels through the patient's stomach S and into the small intestine SI through peristaltic action as is shown in the embodiment of Fig. 11. Once in the small intestine, the release element 70 is degraded by the basic pH in the small intestine (or other chemical or physical condition unique to the small intestine) so as to actuate the actuating mechanism 60 and deliver medication 100 into the wall of the small intestine SI according to one or more embodiments of the invention. For embodiments including a hollow needle or other hollow tissue penetrating member 40, medication delivery is effectuated by using the actuating mechanism 60 to advance the member 40 a selected distance into the mucosa of the intestinal wall IW, and then the medication is injected through the needle lumen 44 by advancement of the delivery member 50. The delivery member 50 is withdrawn and the member 40 is then withdrawn back within the body of the capsule (e.g., by recoil of the spring) detaching from the intestinal wall. For embodiments of device 10 having multiple needles, a second or third needle 42, 43 can also be used to deliver additional doses of the same drug or separate drugs 101. Needle or other tissue penetrating member 40 advancement can be done substantially simultaneously or in sequence. In preferred embodiments that use multiple needles, needle advancement can be done substantially simultaneously so as to anchor device 10 in the small intestine during drug delivery. Referring now to Figs 11A-E, in many embodiments, including those where drug 101 comprises a clotting factor CF, device 10, including actuating mechanism 50 are configured to advance needle or other tissue penetrating member 40 through the intestinal wall IW and the peritoneal wall or peritoneum P, e.g., the visceral peritoneum PV and into the peritoneal cavity PC. Once there the needle is degraded by the serosal and other fluids in the peritoneal cavity PC to release the clotting factor CF into the serosal and other peritoneal cavity fluids and, in turn, into the blood stream by diffusion of the clotting factor CF or other drug 101 into the vasculature of the peritoneum including that of the visceral and parietal peritoneum. In these and related embodiments, positioning of tissue penetrating member 140 into the peritoneal cavity PC can be facilitated by configuring the member 140 to have a symmetric pointed tip 145 as well as increasing the amount of reactants to as to generating increased pressure for propelling member 140 completing through the intestinal wall IW and visceral peritoneum PV and then into peritoneal cavity PC. They may also be facilitated by increasing the amount of reactants 165 in balloon 160 so to generate an increased amount of gas 169 and in turn for gas pressure for propelling member 140 into the peritoneal cavity. In various embodiments of device 10 configured for delivery of tissue penetrating member 140 into the peritoneal cavity PC the amount of reactants 165 by weight (e.g., potassium bicarbonate, sodium bicarbonate, etc.,) can be increased in the range of 10 to 30% over those for positioning member 140 only into the intestinal wall IW.

[0221] After medication delivery, device 10 then passes through the intestinal tract including the large intestine LI and is ultimately excreted. For embodiments of the capsule 20 having biodegradable seams 22 or other biodegradable portions, the capsule is degraded in the intestinal tract into smaller pieces to facilitate passage through and excretion from the intestinal tract as is shown in the embodiments of Figs. 9A and 9b. In particular embodiments having biodegradable tissue penetrating needles/members 40, should the needle get stuck in the intestinal wall, the needle biodegrades releasing the capsule 20 from the wall.

[0222] For embodiments of device 10 including a sensor 67, actuation of mechanism 60 can be effectuated by the sensor sending a signal to actuating mechanism 60 and/or a processor 29 or controller 29c coupled to the actuating mechanism. For embodiments of device 10 including external actuation capability, the user may externally activate actuating mechanism 60 at a selected time period after swallowing the capsule. The time period can be correlated to a typical transit time or range of transit times for food moving through the user's GI tract to a particular location in the tract such as the small intestine.

[0223] One or more embodiments of the above methods can be used for the delivery of preparations 100 containing therapeutically effective amounts of a variety of drugs and other therapeutic agents 101 to treat a variety of diseases and conditions. These include a number of large molecule peptides and proteins which would otherwise require injection due to chemical breakdown in the stomach including, for example, various clotting factors described herein. The dosage of the particular drug can be titrated for the patient's weight, age or other parameter. Also the dose of drug 101 to achieve a desired or therapeutic effect (e.g., insulin for blood glucose regulation) when delivered by one or more embodiments of the invention can be less than the amount required should the drug have been delivered by conventional oral delivery (e.g., a swallowable pill that is digested in the stomach and absorbed through the wall of the small intestine). This is due to the fact that there is no degradation of the drug by acid and other digestive fluids in the stomach and the fact that all, as opposed to only a portion of the drug is delivered into the wall of the small intestine and/or peritoneal wall (or other lumen in the intestinal tract, e.g., large intestine, stomach, etc.). Depending upon the drug 101, the dose 102 delivered in preparation 100 can be in the range from 100 to 5% of a dose delivered by conventional oral delivery (e.g., a pill) to achieve a desired therapeutic effect (e.g., blood glucose regulation, seizure regulation, etc.) with even lower amounts contemplated. The particular dose reduction can be titrated based upon the particular drug, the amount of degradation occurring in the GI tract for conventional oral methods, the frequency of dosing vs dosing using embodiments of the swallowable capsule described herein, the condition to be treated, and the patient's weight, age and condition. For some drugs (with known levels of degradation in the intestinal tract) a standard dose reduction can be employed (e.g., 10 to 20%). Larger amounts of dose reduction can be used for drugs which are more prone to degradation and poor absorption. In this way, the potential toxicity and other side effects (e.g., gastric cramping, irritable bowel, hemorrhage, etc.) of a particular drug or drugs delivered by device 10 can be reduced because the ingested dose is lowered. This

in turn, improves patient compliance because the patient has reduction both in the severity and incidence of side effects. Additional benefits of embodiments employing dose reduction of drug 101 include a reduced likelihood for the patient to develop a tolerance to the drug (requiring higher doses) and, in the case of antibiotics, for the patient to develop resistant strains of bacteria. Also, other levels of dose reduction can be achieved for patients undergoing gastric bypass operations and other procedures in which sections of the small intestine have been removed or its working (e.g., digestive) length effectively shortened.

[0224] In addition to delivery of a single drug, embodiments of swallowable drug delivery device 10 and methods of their use can be used to deliver a plurality of drugs for the treatment of multiple conditions or for the treatment of a particular condition (e.g., protease inhibitors for treatment of HIV/AIDS). In use, such embodiments allow a patient to forgo the necessity of having to take multiple medications for a particular condition or conditions. Also, they provide a means for facilitating that a regimen of two or more drugs is delivered and absorbed into the small intestine and thus, the blood stream, at about the same time. Due to difference in chemical makeup, molecular weight, etc., drugs can be absorbed through the intestinal wall at different rates, resulting in different pharmacokinetic distribution curves. Embodiments of the invention address this issue by injecting the desired drug mixtures at substantially the same time. This in turn, improves the pharmacokinetics and thus the efficacy of the selected mixture of drugs. Additionally, eliminating the need to take multiple drugs is particularly beneficial to patients who have one or more long term chronic conditions including those who have impaired cognitive or physical abilities.

[0225] In various applications, embodiments of the above methods can be used to deliver preparations 100 including drugs and therapeutic agents 101 to provide treatment for a number of medical conditions and diseases. The medical conditions and diseases which can be treated with embodiments of the invention can include without limitation: cancer, hormonal conditions (e.g., hypo/hyper thyroid, growth hormone conditions), osteoporosis, high blood pressure, elevated cholesterol and triglyceride, diabetes and other glucose regulation disorders, infection (local or systemic, e.g., septicemia), epilepsy and other seizure disorders, osteoporosis, coronary arrhythmia's (both atrial and ventricular), coronary ischemia anemia or other like condition. Still other conditions and diseases are also contemplated.

[0226] In many embodiments, the treatment of the particular disease or condition can be performed without the need for injecting the clotting factor or other coagulation protein or other therapeutic agent (or other non-oral form of delivery such as suppositories) but instead, relying solely on the therapeutic agent(s) that is delivered into the wall of the small intestine and/or peritoneal wall or other portion of the GI tract. Similarly, the patient need not take conventional oral forms of a drug or other therapeutic agent, but again can rely solely on delivery into the wall of the small intestine and/or peritoneal wall using embodiments of the swallowable capsule. In other embodiments, the therapeutic agent(s) delivered into the wall of the small intestine and/or peritoneal wall can be delivered in conjunction with an injected dose of the agent(s). For example, the patient may take a daily dose of therapeutic agent using the

embodiments of the swallowable capsule, but only need take an injected dose every several days or when the patient's condition requires it (e.g., hyperglycemia). The same is true for therapeutic agents that are traditionally delivered in oral form (e.g., the patient can take the swallowable capsule and take the conventional oral form of the agent as needed). The dosages delivered in such embodiments (e.g., the swallowed and injected dose) can be titrated as needed (e.g., using standard dose response curve and other pharmacokinetic methods can be used to determine the appropriate dosages). Also, for embodiments using therapeutic agents that can be delivered by conventional oral means, the dose delivered using embodiments of the swallowable capsule can be titrated below the dosage normally given for oral delivery of the agent since there is little or no degradation of the agent within the stomach or other portion of the intestinal tract (herein again standard dose response curve and other pharmacokinetic methods can be applied).

[0227] Various embodiments of preparation 100 containing one or more drugs or other therapeutic agents 101 for the treatment of various diseases and conditions will now be described with references to dosages. It should be appreciated that these embodiments, including the particular therapeutic agents and the respective dosages are exemplary and the preparation 100 can comprise a number of other therapeutic agents described herein (as well as those known in the art) that are configured for delivery into a luminal wall in the intestinal tract (e.g., the small intestinal wall) using various embodiments of device 10. The dosages can be larger or smaller than those described and can be adjusted using one or more methods described herein or known in the art.

[0228] In a group of embodiments, therapeutic agent preparation 100 can comprise a therapeutically effective dose of growth hormone for the treatment of one or more growth disorders, as well as wound healing. In one embodiment, preparation 100 can contain a therapeutically effective amount of growth hormone in the range of about 0.1-4mg, with particular ranges of 0.1-1, 1-4, 1-2, and 2-4 mg, with still larger ranges contemplated. The particular dose can be titrated based on one or more of the following factors: i) the particular condition to be treated and its severity (e.g., hemophilia A, von Willebrand's disorder, etc.); ii) the patient's weight; iii) the patient's age; and iv) the frequency of dosage (e.g., daily vs. twice daily).

[0229] Drug delivery compositions and components of known drug delivery systems may be employed and/or modified for use in some embodiments of the inventions described herein. For example, micro-needles and other microstructures used for delivery of drugs through the skin surface with drug patches may be modified and included within the capsules described herein and used to instead deliver a drug preparation into a lumen wall of the gastrointestinal tract such as the wall of the small intestine and/or peritoneal wall. Suitable polymer micro-needle structures may be commercially available from Corium of California, such as the MicroCor™ micro delivery system technology. Other components of the MicroCor™ patch delivery systems, including drug formulations or components, may also be incorporated into the capsules described herein. Alternatively, a variety of providers are commercially available to formulate combinations of polymers or other drug-delivery matrices with selected drugs and

other drug preparation components so as to produce desired shapes (such as the releasable tissue-penetrating shapes described herein) having desirable drug release characteristics. Such providers may, for example, include Corium, SurModics of Minnesota, BioSensors International of Singapore, or the like.

[0230] One advantage and feature of various embodiments of the therapeutic compositions described herein is that by being enclosed or otherwise contained in the swallowable capsule or other swallowable device, a clotting factor (e.g., Factor VIII) or other biologic (e.g., a peptide or protein) drug payload is protected from degradation and/or hydrolysis by the action of peptidases and proteases in the gastrointestinal (GI) tract. These enzymes are ubiquitous throughout living systems. The GI tract is especially rich in proteases whose function is to break down the complex proteins and peptides in one's diet into smaller segments and release amino acids which are then absorbed from the intestine. The devices and compositions described herein are designed to protect the therapeutic peptide, clotting factor or other protein from the actions of these GI proteases and to deliver the peptide or protein payload directly into the wall of the intestine. There are two features in various embodiments of the compositions described herein which serve to protect the protein or peptide payload from the actions of GI proteases. First, in certain embodiments, the capsule shell, which contains the deployment engine and machinery, does not dissolve until it reaches the duodenal and sub-duodenal intestinal segments, owing to the pH-sensitive coating on the outer surface of the capsule which prevents its dissolution in the low pH of the stomach. Second, in certain embodiments, hollow polymer micro-spears (e.g., polyethylene, polyethylene oxide, maltose, silicone etc.) contain the actual therapeutic peptide or protein; the polymer micro-spears are designed to penetrate the intestine muscle as soon as the outer capsule shell dissolves; and the micro-spears themselves slowly dissolve in the intestinal muscle wall to release the drug payload. Thus, the peptide, clotting factor other protein payload is not exposed to the actions of the GI proteases and therefore does not undergo degradation via proteolysis in the GI tract. This in turn, contributes to the high bioavailability of the therapeutic peptide or protein versus what would be expected if one or both of the above approaches were not used and the peptide or protein were exposed to the GI proteases. In particular for embodiments of the compositions comprising compounds which bind to specific receptors or other target region on a molecule, such approaches preserve the binding affinity and specificity of the compound allowing it to bind to the desired receptor.

[0231] Clotting factors or other coagulation proteins provided by embodiments of the invention are particularly useful for treating various coagulating disorders. Specific coagulation disorders which may be treated include Hemophilia A and B and von Willebrand's disease. Such embodiments result in the delivery of clotting factors and other coagulation proteins with particular pharmacokinetic properties which are advantageous as compared to intravenous, sub-dermal or intramuscular injection. They also allow for the usage of dosages which provide one or more of the following benefits including: higher therapeutic ratio, reduced incidence of allergic reaction (including e.g., anaphylactic shock; myalgia and neurocognitive and ophthalmologic events) and reduced immunogenicity and/or immunogenic reaction

(compared to subcutaneous and/or intramuscular injection). In one embodiment, the reduced incidence of allergic reaction can be determined by comparison of such incidences for patient populations who are administered clotting factor or other coagulation protein by standard injection (e.g., intramuscular, intravenous etc.) vs the oral delivery for traditional compounds and then use that reduction to model a predicted reduction for known incidences of allergic reaction in patient populations for one or more of the clotting factors (e.g., Factor VIII) or other coagulation proteins.

[0232] Embodiment of Factor VIII Dosages

[0233] According to one or more embodiments, the dosage of clotting factor or other coagulation protein administered using one or more embodiments of the swallowable capsule is usually, though not necessarily, a therapeutically effective amount. As used herein, the phrase "therapeutically effective amount" means a dose of clotting factor (e.g., Factor VII, VIII, IX, X) or other coagulation protein that results in: i) a detectable improvement in one or more clinical measurements (e.g., clotting time such as prothrombin time) of coagulation of a given coagulation disorder; or ii) a dose of clotting factor or other coagulation protein that inhibits, prevents, lessens, or delays the symptoms of a clotting disorder such as hemophilia (A or B) or von Willebrand's disease. According to various embodiments, a therapeutically effective amount of clotting factor (e.g., Factor VII, VIII, IX and X) delivered by embodiments of the invention can be in a range from about 1000 to 10,000 IU, with specific embodiments of 1400, 1500, 2000, 2500, 3000, 3500, 4000, 4500, 50000, 6000, 7000, 7500, 8000, 9000, 9100 and 9500 IUs. For embodiments where the dosage of drug is determined by weight, a therapeutically effective amount of clotting factor can be in the range of about 0.1 to 10 mg, with specific embodiments of about 1.5 to 10 mg, 1 to 5 mg, 1 to 3 mg, about 0.03 to 1.73 mg, about 0.02 to 1.15 mg and about 0.34 to about 1mg with other ranges also contemplated. The specific dose can be selected and depending upon one or more of the specific clotting factor to be delivered (e.g., Factor VII, VIII, etc.), the condition to be treated, clinical setting (e, g., prophylaxis vs acute hemorrhage), patient weight, age and sex. Table 1 lists exemplary dosages in IU per kg patient weight for treatment of hemophilia A and B with Factors VIII and IX respectively in various clinical settings. Other dosages for these and other coagulation disorders and other conditions (e.g., cerebral hemorrhage) are described in more detail herein.

TABLE 1

Exemplary doses of Factor VIII (FVIII) and Factor IX (F9) for the treatment and/or prevention of bleeding in Hemophilia A and B patients.

Clinical setting	Hemophilia A FVIII dose (IU/kg patient weight)	Hemophilia B F9 dose (IU/kg)
Mild/moderate hemarthroses or hematomas	20–30	20–40
Severe hemarthroses or hematomas External bleeding with anemias	30–50	40–60

Moderate post-traumatic bleeding		
Cranial trauma Cerebral hemorrhage	50–100	50–100
Surgery prophylaxis	50–100	50–100
Primary prophylaxis	25–30 (3 x per week)	30–40 (2 x per week)

[0234] According to various embodiments, the dosage of a specific clotting factor (such as those described in Table 1) can be titrated (i.e., adjusted) based on a clotting time measurement such as prothrombin time or whole blood clotting time. So for example, when the patient shows longer clotting times, the dose of clotting factor can be increased and for shorter clotting times, the dose can be decreased. In this way, the dosage of clotting factor delivered by embodiments of the invention can be optimized for a given patient over their course of treatment and account for conditions such as growth, diet and other medications which may affect the coagulation/clotting properties of their blood including clotting time. In particular embodiments, the patient may be provided with an inventory of swallowable capsules having different doses of a particular clotting factor (e.g., Factor VIII) and then select the dose to use from the inventory based on the clotting time measurement. In particular embodiments, the patient may be provided with a table or other information for selecting a particular dose of clotting factor based (from an inventor of swallowable capsules) on the clotting time or related measurement. According to some embodiments, the table or other information may be electronically stored in memory or logic resources of one or more of cell phone, tablet or other computational device as well as in the Cloud.

[0235] In related or additional embodiments, prothrombin time or other clotting time measurement can be used to select an optimal source of clotting factor for a given patient and coagulation disorder. For example for Factor VIII, prothrombin time can be used to select a plasma derived Factor VIII vs a genetically modified Factor VIII molecule described herein based on which one yields and maintains clotting time in a normal physiologic range, e.g., 25 to 30 seconds.

[0236] Embodiments For Reducing Or Preventing Localized Hemorrhage From Penetration Of The Tissue Penetrating Member Into The Small Intestine Or Other GI Lumen Wall.

[0237] In various embodiments, tissue penetrating member 40, 140 can be specifically configured to reduce the unlikely possibility of any hemorrhage due to insertion of the tissue penetrating member into the small intestine and/or peritoneum. Referring now to Fig 18H, in specific embodiments, this can be achieved by putting a rapidly dissolving layer or coating 101c of clotting factor 101 (e.g., Factor VIII) over all or portion of the surface 140s of the tissue penetrating member 140 so that the clotting factor is immediately released at the tissue site (e.g., the small intestine, peritoneum etc.) where the tissue penetrating member enters. This allows clotting factor to rapidly initiate clotting at that site and thus prevent or minimize any hemorrhage at that or a nearby site. In additional or alternative embodiments, one or more rapid hemostatic agents (described below) known in the art may also be used in the surface coating 101c of tissue penetrating member (TPM) 140 either by themselves or in combination with the

clotting factor(s) (e.g., clotting factor VIII) delivered by the tissue penetrating member 140. Referring now to Figs. 15G, 20H and 20I, in still other additional or alternative embodiments, one more clotting factors 101 (e.g., Factor VIII) can be coated onto all or a portion of delivery balloon 172 such that when the balloon is expanded to insert TPM 140(s) into tissue of the small intestine (SI), or other location (e.g., the peritoneal wall, etc.,) faces 172f makes contact with the wall of the small intestine (or other GI lumen wall) to coat the entry point of the TPM with clotting factor such as clotting factor or a rapid hemostatic agent. Desirably, the coating 101c of clotting factors 101 is positioned on the central portion of faces 172f of balloon 172, and or has the highest amounts of active ingredients or thickness in those locations. In additional or alternative embodiments, the size and pressure of the deployment balloon 130 can also be configured such that amounts of clotting factor can even slightly penetrate into the endothelial surface including the tight junctions of the small intestine wall. In this way, clotting factor is present within the small intestine wall to immediately initiate clotting from penetration of the tissue penetrating member. In additional or alternative embodiments, the clotting factor coated onto either TPM 140 or delivery balloon 172 may comprise rapid hemostatic agents (RHA) known in the medical arts. These RHAs may be coated onto the TPM 140 or balloon 130 by themselves of in additional to the clotting factor (of which the patient is deficient) delivered by TPM 140. Such RHAs may include one or more of factor concentrators, mucoadhesive agents or procoagulant supplementors. A more complete list and description of such RHAs may be found in the paper by Khoshmohabat et al.: Overview of Agents Used for Emergency Hemostasis. Trauma Mon. 2016 Feb 6;21(1), which is fully incorporated by reference herein for all purposes.

[0238] Benefits of Delivery of Clotting Factors and other Coagulation Proteins into the Intestinal Wall or Other Location in the Intestinal Tract.

[0239] In use, embodiments of the invention providing for delivery of a clotting factor or other coagulation-protein into the wall of the intestine and/or peritoneal wall and adjoining tissue (e.g., the peritoneal wall or cavity) or other target site in the intestinal tract e.g., the larger intestine) for treatment of one or more of the above or conditions provide a number of benefits over injected forms of clotting factors (e.g., Factors VII, VIII, IX and X). Such benefits can include without limitation: i) a higher therapeutic ratio; ii) more consistent maintenance of the CF within a therapeutic range or window; and iii) reduced incidence and severity of the adverse reactions including one or more of: anaphylactic shock or other allergic reaction (including at the injection site), bruising and bleeding at the injection site, nasopharyngitis, upper respiratory tract infections, influenza, back pain myalgia, neurocognitive events, and ophthalmologic events; and decreased immunogenicity and /or immunogenic reaction including the development of inhibitory antibodies described herein. These benefits are due to one or more of the following: i) the much smaller doses that are delivered by embodiments of the invention; ii) doses are delivered daily vs weekly or monthly resulting; and iii) the fact that doses are delivered orally vs intravascularly.

[0240] In many embodiments, the therapeutic ratio of dosages of a clotting factor or other coagulation protein delivered orally by embodiments of the invention can be increased significantly over that of

clotting factors such as Factor VIII delivered by injection (e.g., intravenously, intramuscularly, or subcutaneously, etc. on a weekly, biweekly, or monthly basis). In various embodiments, the term "significantly" corresponds to an increase in the therapeutic ratio in an amount of two times or greater, e.g., seven to thirty times greater or more. For clotting factors such as Factors VII, VIII, IX or X that are typically delivered every two to three days weekly doses when injected (e.g., intravenously, intramuscularly, or subcutaneously, etc.), the therapeutic ratio (e.g., Toxic Dose/Effective Dose) can be increased by a factor in the range of three to seven when delivered in daily oral doses using the swallowable devices provided by the invention, while in the case of monthly injected doses of clotting factors the therapeutic ratio can be increased by a factor of 30 when delivered in daily oral doses by embodiments of the invention. Further, increases can be obtained when the oral dose of clotting factor (or other coagulation protein) is given multiple times over a day. Similar improvements (e.g., by a factor of 2, 3, 30 or even more) can be seen in the incidence in one or more of immunogenicity/immune response (vs intramuscular and/or subcutaneous injection), allergic reaction, and other adverse reactions. Immunogenicity/immune response, being the production by the body of antibodies (e.g., inhibitory antibodies) to the administered coagulation protein/clotting factors which neutralize or otherwise diminish the clinical efficacy of the clotting factor or other coagulation protein. The reduction in the incidence and severity of allergic reaction by a factor of two up to 30 is due to the fact that the antibodies are given in daily doses vs by-weekly or even less frequent periods which tends to desensitize the immune system (the degree of allergic reaction can be determined using methods known in the art and may be correlated to one or more *in vitro* tests known in the art). Similarly, the degree of reduced immunogenicity including the production of inhibitory antibodies to one or more clotting factors such as Factor VIII can be reduced by a factor of two to as much as thirty or more. This is due to three factors: 1) the doses are not delivered subcutaneously and/or intramuscularly (which tend to exacerbate such responses); 2) the doses are delivered in much smaller amounts, e.g., by a factor of 7 to as much as 30 depending on whether the injected dose is delivered weekly, biweekly, monthly etc.,; and 3) as discussed above the dose of clotting factor (or other coagulation protein) is delivered to the upper portions of the small intestine avoiding the Peyer's patches and subsequent production of immune cells and other immune response. The amount of immune response to a given clotting factor (e.g., Factor VIII, etc.,) can be quantified using one more immunologic analytical methods known in the art to measure, for example, the production of generated antibodies (e.g., inhibitor antibodies) to the delivered clotting factor (e.g., Factor VIII) or other coagulation protein) and/or the percentage of the administered clotting factor that is neutralized by the patient's own antibodies (e.g., inhibitor antibodies). In these and related embodiments, the dosage and dose regiment of the clotting factor (or other coagulation protein) can configured to yield a minimal immune response in the patient, wherein minimal means less than 10% of the delivered clotting factor (or other coagulation protein) is neutralized by the patient's own antibodies and more preferably less than 5%.

[0241] In other embodiments, the immune response and/or allergic response to the administered clotting factor (or other coagulation protein) can be quantified by measuring differences in the serum titer of antibodies to a given clotting factor (e.g., Factor VIII) when administered in daily oral doses vs every two or three days, biweekly or monthly intravenous doses. In these and related embodiments, the dosage and dose regiment of the clotting factor (or other coagulation protein) can be configured to yield a minimal immune response in the patient, wherein minimal means less than a 10 % increase in the serum concentration of the patient's own antibodies (e.g., inhibitor antibodies) against the administered clotting factor (e.g., Factor VIII) and more preferably less than a 5% increase.

[0242] In related approaches, the serum titer of cytokines (e.g., interleukins, such as interleukin 7) and/or white blood cells can be measured for the dose and administration of a given clotting factor. In these and related embodiments, the dosage and dose regimen of the clotting factor or other coagulation protein can be configured to yield a minimal immune response in the patient, wherein minimal means less than a 10 % increase in the serum concentration of one or more of the patient's white blood cells and/or a particular cytokine (e.g., interleukin 7) and more preferably less than a 5% increase. In related embodiments, immune response can be quantified by using changes in white blood cell differentials (e.g., increase in the % of Eosinophils or Basophils which occur in allergic reactions). In these and related embodiments, the dosage and dose regiment of the clotting factor or other coagulation protein can be configured to yield a minimal immune response in the patient, wherein minimal means less than a 10 % change in the percentage of a particular type of white blood cell (e.g., Eosinophils) in the patient's total white blood cell count.

[0243] Another benefit achieved by delivering doses of various clotting factors or other coagulation protein in daily doses versus longer intervals between dose (e.g., every two or three days, biweekly or monthly doses) by conventional injection means (e.g., by intravenous, intramuscular or subcutaneous injection) is a reduction in the fluctuation of the patients plasma concentration profile for the particular clotting factor or other coagulation protein which in turn results in a much smoother plasma concentration with time. Using a pharmacokinetic model explained in more detail in Appendix 1, plasma concentration curves were generated for the delivery of Alirocumab in biweekly delivery periods (Fig 24A) verses daily doses (Fig 24A) which were titrated down from biweekly dose. As can be seen from the figures, the amount of daily fluctuation in the curves is much less for Alirocumab delivered orally by embodiments of the invention. Also a value known as "% steady state fluctuation" was calculated for each of these antibodies using an equation shown and described in detail in Appendix 2. The value reflects the amount of daily fluctuation in the plasma concentration of a given drug. As shown in Table 2 below, the calculated amount of steady state fluctuation in plasma concentration of the particular antibody was reduced significantly when the antibody is delivered by embodiments of the invention in daily doses vs subcutaneous injection (66.3% to 0.39%). With the result being about a 170 times reduction in steady state fluctuation for Alirocumab. The model has also been used to show reductions in steady plasma fluctuations for two anti-interleukin antibodies: Secukinumab and Brodalumab (as is described in U.S.

Patent Application Serial No. 15/150,379 which is fully incorporated by reference herein for all purposes) with results shown in Table 3. In these cases, the reductions in steady fluctuation were from 171 to 216x. Thus, the model consistently shows reductions of 170 to 216% in the steady plasma concentrations of a given drug (e.g., clotting factor) when the drug is given in daily doses using embodiments of the invention vs biweekly or monthly using subcutaneous injections. Using such a model, similar absolute values (e.g., 0.12 to 0.39%) and reductions in % steady state fluctuation are expected for various clotting factors described herein. The benefits of such reductions include one or more of the following: reduced risk of adverse event, reduced allergic reaction and immunogenicity (e.g., reduced incidence and production of the amount of inhibitory antibodies to a particular clotting factor such as Factor VIII); as well as longer period of time when the patient is kept in the therapeutic range for a given clotting factor allowing the clotting factor to better and more consistently treat the intended clotting disorder e.g., hemophilia. The reduced steady state fluctuation may also be used to quantify a reduction in the patient's immune response to a particular clotting factor such as a reduction in the number of inhibitor antibodies. Such a reduction may be proportional (e.g., directly proportional, fractionally proportion, etc.) or in the form of a first order or second order proportionality.

TABLE 2

% Steady State Fluctuation in Plasma/Serum Concentration of Alirocumab using conventional subcutaneous dosing of the drug vs daily dosing by embodiments of the invention.

	Alirocumab
Conventional Subcutaneous Dosing	66.33%
Daily Oral Dosing Using Embodiments of the Invention	0.39%
Decrease in Steady Fluctuation	170x

TABLE 3

% Steady State Fluctuation in Plasma/Serum Concentration of Secukinumab and Brodalumab using conventional subcutaneous dosing of the drug vs daily dosing by embodiments of the invention.

	Secukinumab	**Brodalumab**
Conventional Subcutaneous dosing	56.15%	20.48%
Daily dosing using embodiments of the invention	0.26%	0.12%
Decrease in Steady Fluctuation	216x	171x

[0244] Embodiments of Therapeutic Compositions Comprising Factor VIII

[0245] As discussed above, various embodiments of the invention provide therapeutic compositions comprising clotting factors such as Factor VIII for the treatment of clotting disorders such as Hemophilia A or Hemophilia B.

[0246] A brief explanation will now be presented on Factor VIII compounds. Factor VIII (also referred to herein as FVIII or FVIII) is a glycoprotein that amplifies the coagulation signaling cascade allowing timely clotting upon injury. The gene encoding for FVIII is located on the long arm of the X chromosome Xq28 {Thompson, 2003 #37} and is constituted of 26 exons, these are intercalated by introns of varying sizes. FVIII is synthesized as a 19 amino acid long signal peptide and a 2332 amino acids sequence. It is produced mainly by the liver. The kidneys, spleen and lymphocytes produce smaller quantities of FVIII. No cultured human cell line can express FVIII which is currently produced using Chinese hamster ovarian cells, baby hamster kidney cells or human embryonic kidney cells genetically modified with the human FVIII cDNA.

[0247] The FVIII molecule is composed of three different types of domains: A1, A2 and A3 domains that are homologous to each other and essential for catalytic activity; a B domain that is highly variable across species and heavily glycosylated but not essential for the pro-coagulation activity of the protein {Kaufman, 1997 #36} and C1, C2 domains that are involved in binding with other coagulation factors (FIX and FX) and phospholipids.

[0248] FVIII is produced from its mRNA on ribosomes inside the endoplasmic reticulum (ER), the signal peptide is then cleaved in the ER lumen and the protein glycosylated on the B-domain with oligosaccharides rich in mannose residues. Attachment to ER chaperones including Bip (immunoglobulin binding protein), calnexin and calreticulin also occurs in the lumen and Bip transports FVIII aggregates to the cytosol for degradation. Deletion of the B-domain increases secretion of FVIII probably because its binding to Bip is inhibited. Another chaperone, ERGC-53 is responsible for FVIII translocation to the Golgi after Bip dissociates from the protein. ERGC-53 binds to the mannose residues on the B-domain. In the Golgi, FVIII undergoes further glycosylation, disulfide bond formation and folding. Since two peptidic bonds are cleaved within the B-domain, the resulting secreted protein is a heterodimer formed by a heavy and a light chain. Some missense mutation in hemophiliac patients cause reduced secretion of FVIII because of increased transport of the protein to the cytosol for degradation from the ER and because of increased Golgi degradation.

[0249] Circulating FVIII is stabilized by its binding with Von Willebrand Factor (VWF) that occurs on the B-domain. The half-life of circulating FVIII is approximately 18 hours in normal subjects. The half-life of recombinant FVIII in hemophilic subjects ranges from 10 to 20 hours depending on the blood type and VWF levels. Maximum activity of FVIII is detectable after 1-2 hours of intravenous administration. FVIII is removed from the circulation via binding to a low-density lipoprotein related receptor protein (LRP) that is a liver multi-ligand endocytic receptor {Saenko, 1999 #39}.

[0250] The Factor VIII used in embodiments of the invention, including for preparations 100, will typically comprise human Factor VIII and may be a naturally occurring form or a recombinant form. The former includes Factor VIII derived from human plasma. The latter include variants of wild type Factor VII which have the same or higher biological activity compared to the activity of the wild form, but differing from the wild type Factor VIII by insertion, deletion or substitution of one or more amino acids.

[0251] Types of Factor VIII Delivered by Embodiments of the Invention

[0252] Various embodiments of the invention contemplate delivery of a number of different types of available Factor VIII replacement therapies. First, is plasma derived concentrated Factor VIII. Typically, such plasma derived Factor VIII is extracted from pooled human plasma and purified to minimize contamination with pathogens (e.g., ALPHANATE and HUMATE-P). Second is recombinant human Factor VIII produced in mammalian cell lines from recombinant DNA technology resulting in the full-length human Factor VIII protein (e.g., HELIXATE®, KOGENATE®, RECOMBINATE®, and ADVATE®). Third is recombinant human factor VIII that has been modified from the wild type version, the most common modification being B-domain deletions (e.g., REFACTO, AFSTYLA and NOVOEIGHT). Finally, some products contain Factor VIII either wild type or a recombinant form or an analog of either, that is modified to increase its half-life in circulation, also known as T½. Examples of such modifications include PEGylation and Fc fusion. PEGylation is the covalent coupling of PEG (polyethylene glycol) chains to a drug or other therapeutic agent. PEG is both non-toxic and biocompatible. Due to these and other material properties of PEG, it lends itself well to increasing the circulatory half-life of labile drug molecules including labile bio-therapeutics such as Factor VIII or other clotting factor. In particular, the hydrophilic nature of PEG polymers allows binding of water molecules to form a water layer over the surface of PEGylated drugs. This increases the hydrodynamic radius of biopharmaceuticals and interferes with and reduces renal clearance. In addition, PEGylation provides a steric barrier against proteolysis, binding of opsonizing proteins and interaction with clearance receptors or cellular surface like those of the RES. PEGylation of lipid particles containing therapeutic proteins such as FVIII is an alternative option that imparts the protective beneficial effects of PEG on the particle without the risk of altering critical functions by covalently attaching it to the protein. Within the particle itself, FVIII is encapsulated in the lumen or intercalated in the lipid bilayer. The protein is released from the particle in vivo where it can participate in necessary intermolecular interactions such as association with VWF. A brief description of the above-mentioned types of Factor VIII will now be presented.

[0253] Embodiments of Stabilized Factor VIII Delivery by Embodiment of the Invention

[0254] In particular embodiments, the invention provides therapeutic preparations for the treatment of a clotting disorder comprising a stabilized form of Factor VIII (or other clotting factor), so as to increase the one more of the circulatory half-life of the drug and thus its AUC and bioavailability. The stabilization may be achieved by one or both of the following approaches: i) chemical complexing a give type of Factor VIII (e.g., wild or recombinant) with a stabilizing agent or ii) including in the therapeutic preparation 100 comprising Factor VIII an excipient comprising a stabilizing agent. Examples of

chemical complexing methods and agents include PEGylation where the FVIII molecule is complexed with a PEG molecule) or via Fc-fusion both of which are described in more detail herein. Other stabilizing agents for chemical complexing may also be considered including, for example Von Willebrand factor, or one or more hydrogels.

[0255] In various embodiments, the stabilizing agent/excipient may be heterogeneously mixed with the Factor VIII product during formulation of therapeutic preparation 101. Alternatively it may be applied as a coating. Examples of stabilizing excipients include calcium, Von Willebrand Factor, Albumin and non-chelating protease inhibitors such as heparin and DFP (diisopropyl fluorophosphates). In particular embodiments the stabilizing excipients included in preparation 101 with Factor VIII may include a combination of heparin, DFP and calcium. For the case of Von Willebrand Factor (VWF), in particular embodiments it may be mixed in an approximate 1:1 ratio with the particular Factor VIII so that a majority of the Factor VIII in the TPM 140 quickly binds to VWF to form a FVIII:VWF complex which protects the stability of the FVIII during transits through intestinal and/or peritoneal wall. For the case of calcium, it is desirable to include a sufficient amount of this chemical such that when drug section 142 is dissolving in tissue (e.g., the wall of the small intestine or peritoneal wall or cavity) and transits through the peritoneal wall into the portal vein or other vasculature it is surrounded by fluid containing a calcium concentration normally found in blood e.g., 8.6-10.3 mg/dl. Given the small size of the TPM 140 in the mm range and the small amount of Factor VIII typically contained in it (1 to 3 mg), the amount of calcium included with in the TPM 140 to achieve this goal can be less 2 mg including specific embodiments of 1, 0.5, and 0.254 mgs of calcium. In use, delivery of a stabilized form of Factor VIII, reduces one or both of the required dosage and frequency of dosing of the drug. It also reduces in the incidence of hemorrhage as the patient's plasma concentration of Factor VIII are mainlined within the desired therapeutic range for longer periods of time.

[0256] Embodiments of Factor VIII preparations comprising anti-aggregation agents.

[0257] In various embodiments, the stabilizing agent/excipient may comprise an agent configure to reduce or eliminate aggregation of the FVIII or FVIIIA molecules in vivo and/or during lyophilization or other production process used to manufacture the FVIII or FVIIIA therapeutic preparations. Such preparations confer several advantages which will now be described. Recombinant factor VIII (rFVIII) has the potential to develop immunogenicity in 25-30% of the patients undergoing therapy for hemophilia A. A major cause for immunogenicity is the formation of aggregates either during the manufacture process or in-vivo. Accordingly embodiments of the invention contemplate the inclusion in the therapeutic agents comprising FVIII, FVIIIA (or other clotting factor described herein) agents that can protect the factor VIII protein from aggregation due to compressive stresses and other forces or reactions during the manufacturing (lyophilization) process used to make the FVIII, FVIIIA preparation 101 and/or to make the drug portion 142 (also referred to as a microtablet). Examples of such anti-aggregation agents which can be included as excipients in preparation 101 include amino acids such as arginine (positively charged), glutamic acid (negatively charged), and leucine (non-polar). Such agents can stabilize the

rFVIII during lyophilization and storage by preventing protein-protein interactions and additional hydrogen bond interactions between the constituents in the formulation. Another example of anti-aggregation agents includes Pluronic F-68, a non-ionic surfactant. In particular Pluronic F-68 functions to shield FVIII from stress during lyophilization and the microtableting process (the process used to compress or otherwise form drug section 142 and or TPM 14).

[0258] Embodiment of Factor VIII preparations comprising permeability enhancing agents.

[0259] Considering the large size of FVIII, membrane permeability in particular the permeability of the serosal or other peritoneal membrane may play an important role in enhancing protein uptake into the lymphatic system during intraperitoneal delivery by the embodiments of device 10 and capsule 20. Accordingly, embodiments of the invention contemplate the addition of a membrane permeability enhancer to therapeutic preparation 101 and or drug portion 142 so as to promote uptake of FVIII across the peritoneal membrane. One example of such a permeability enhancing agent includes hyaluronidase. This compound would allow solution of FVIII or FVIIIA formed by dissolution/biodegradation of the TPM 140 and/or drug portion 142 to spread across the larger area of the peritoneal membrane as it decomplexes. The hyaluronic acid would also enhance the diffusion capacity and bioavailability of the intrajejunally injected/delivered forms of FVIII, FVIIIA or other clotting factor preparation 101. This in turn, would lead to improvement in one more of the C_{max}, bioavailability and AUC for the so delivered FVIII, FVIIIA or other clotting factors. For example, if the addition of the hyaluronidase increases the uptake of FVIII by even 10%, the C_{max}, and the AUC defined previously for PEGylated FVIII would increase proportionally. This increase will reflect in the increase in bioavailability of PEGylated FVIII by 8-12%. The below Table 4 provides example weight ratios of FVIII or FVIIIA molecule (or other clotting factor described herein) to excipient in drug portion 142/preparation 101 for various stabilizing, anti-aggregation and permeability enhancing agents described herein.

TABLE 4

Compound	Weight ratio FVIII or FA to Excipient	Type of Excipient Molecule
Trehalose	25:1 – 1:25	Protectant
L-Arginine HCL	15:1 – 1:15	Stabilizer
L-Glutamic acid	15:1 – 1:15	Stabilizer
L-Leucine	15:1 – 1:15	Stabilizer
Pluronic F68	5:1 – 1:5	Stabilizer
Hyaluronidase	50:1 – 1:50	Permeation enhancer
VWF	50:1 – 1:50	Complex
PEG	15:1 – 1:15	Binding Agent

[0260] ADVATE (Antihemophilic Factor (Recombinant) (rAHF), available from the Shire Corporation) is a purified glycoprotein consisting of 2,332 amino acids that is synthesized by a genetically engineered Chinese hamster ovary (CHO) cell line but does not contain plasma or albumin. The CHO cell line employed in the production of ADVATE is derived from that used in the biosynthesis of RECOMBINATE. ADVATE has been shown to be comparable to RECOMBINATE with respect to its biochemical and physicochemical properties, as well as its non-clinical in vivo pharmacology. The rAHF synthesized by the CHO cells has the same biological effects on clotting as human anti-hemophilic factor (hAHF). Structurally the recombinant protein has a similar combination of heterogeneous heavy and light chains as found in human antihemophilic factor. ADVATE is formulated as a sterile, non-pyrogenic powder for intravenous injection. Von Willebrand factor (VWF) is co-expressed with factor VIII and helps to stabilize it in culture. The final product contains no more than 2 ng VWF per IU of rAHF. The specific activity of ADVATE is 4000 to 10000 International Units per milligram of protein. For prophylaxis 20-40 IU of factor VIII per kg body weight every other day (3 to 4 times weekly) can be used.

[0261] PEGYLATED FVIII

[0262] ADYNOVATE® PEGylated FVIII (available from the Shire Corporation) is a recombinant full-length human coagulation factor VIII (2,332 amino acids with a molecular weight (MW of 280 kDa) covalently conjugated with one or more molecules of polyethylene glycol (MW 20 kDa)).

[0263] ESPEROCT

[0264] ESPEROCT®, which is available from NovoNordisk, is a recombinant analogue of human coagulation Factor VIII (FVIII) conjugated with a 40-kDa polyethylene glycol (PEG) molecule chemical designation. The formal chemical name for ESPEROCT is turoctocog alfa pegol (shortened to N8-GP) and, is a PEGylated version of turoctocog alfa. It was approved by the FDA in February 2019. N8-GP with indications for use in adults and children of all ages with hemophilia A for routine prophylaxis in reducing the frequency of bleeding episodes, on-demand treatment and control of bleeding episodes, and the perioperative management of bleeding. Fundamentally N8-GP is identical to turoctocog alfa, a recombinant human clotting factor VIII (rFVIII) with a truncated B-domain made from the sequence coding for 10 amino acids from the N-terminus and 11 amino acids from the C-terminus of the naturally occurring B-domain. Turoctocog alfa is produced in Chinese hamster ovary (CHO) cells without addition of any human or animal-derived materials [11]. During secretion, some rFVIII molecules are cleaved at the C-terminal of the heavy chain (HC) at amino acid 720, and a monoclonal antibody binding C-terminal to this position is used in the purification process allowing isolation of the intact rFVIII. It was developed by Novo Nordisk and approved by the US FDA on October 16, 2013. The essential difference between turoctocog alfa and N8-GP, however, is the specific attachment of a 40-kDa polyethylene glycol (PEG) group to a specific O-glycan in the truncated B-domain of the general turoctocog alfa rFVIII structure. This modification to the general turoctocog alfa rFVIII structure extends the in vivo half-life of N8-GP and converts into an extended half-life factor VIII molecule for factor VIII replacement therapy in

patients with hemophilia A. N8-GP has been shown to provide effective routine prophylaxis in people with severe hemophilia A through a fixed dosing regimen of one injection every 4 days in adults and adolescents, or every 3-4 days (twice-weekly) in children. Furthermore, N8-GP provided effective prophylaxis and maintained a low median annualized bleeding rate (ABR) of 1.18. Additionally, N8-GP was also found to be efficacious in the treatment and control of bleeding episodes and the perioperative management of bleeding. Across the clinical trials and age groups, N8-GP was shown to be well tolerated and no safety concerns were identified. The overall safety profile of N8-GP is similar to what has been reported for other long-acting FVIII products [

[0265] ALPHANATE

[0266] ALPHANATE® (Available from Grifols Biologics, Inc.) is a sterile, lyophilized concentrate of Factor VIII complexed with the Von Willebrand Factor purified from pooled human plasma. The extracted protein is subjected to several processes and chemical treatments to ensure sterility and viral load minimization. The pro-coagulant activities of both factors are reported in International Units (IU). The final product is stabilized by the addition of human albumin. One IU of Factor VIII in this product is approximately equivalent to the Factor VIII activity of 1 ml of fresh human plasma. The specific activity of the product is at least 5 IU per mg of protein. For prophylaxis of Hemophilia A patients, the dosing in IU and the frequency of infusion are to be determined on a case by case basis by an experienced doctor. The pharmacokinetic profile was evaluated in 12 adult patients with severe Hemophilia A, the mean half-life was 17.9 ± 9.6 hours, 96.7 ± 14.5% at 10 minutes post-infusion. Recovery at 10 minutes post-infusion was also determined as 2.4 ±0.4 IU FVIII rise/dL plasma per IU FVIII infused/kg body weight.

[0267] ELOCTATE

[0268] ELOCTATE® is available from the Biogen Corporation. The active ingredient in ELOCTATE is a B-domain deleted recombinant Factor VIII, Fc fusion protein (BDD-rFVIIIFc). BDD-rFVIIIFc is a recombinant protein consisting of a B-domain deleted analogue of human Coagulation Factor VIII covalently linked to the human immunoglobulin G1 (IgG1) Fc domain sequence. The Factor VIII portion of the molecule has a 90 kDa heavy chain and an 80 kDa light chain (similar to endogenous Factor VIII), which are linked by 14 (of 908) amino acids from the central B-domain. The FVIII portion has post-translational modifications comparable to endogenous Factor VIII. The Fc domain of the molecule contains the hinge, CH2, and CH3 regions of IgG1. BDD-rFVIIIFc contains 1890 amino acids with an apparent molecular weight of 220 kDa. The majority of the expressed protein is cleaved to a two-chain molecule; however ELOCTATE may also contain up to 39% of a single chain, non-processed form. Both molecules have been shown to have comparable Factor VIII activity. The protein is produced by a human embryonic kidney cell line and purified from the cell culture medium. ELOCTATE is supplied as a sterile, non-pyrogenic, lyophilized powder with sterile water for reconstitution and IV injection. It is available in different strengths. For routine prophylaxis: 50 IU/kg every 4 days are recommended. The dose must be adjusted based on patient response with dosing in the range of 25-65 IU/kg at 3-5 day intervals.

[0269] HUMATE-P

[0270] HUMATE®-P (available from CLS Behring) is a purified, sterile, lyophilized concentrate of Factor VIII (FVIII) and von Willebrand Factor (VWF) for the treatment of patients with hemophilia A and VW disease. HUMATE-P is purified from the cold insoluble fraction of pooled human plasma. One International Unit (IU) of VWF or FVIII is approximately equal to the activity amount of VWF or FVIII in 1.0 mL of fresh-pooled human plasma. Depending on the PK of the individual patient, dosing might be repeated every 6, 8 or 12 hours.

[0271] HELIXATE FS and KOGENATE FS

[0272] HELIXATE® FS (available from CLS Behring) and KOGENATE® FS (available from the Bayer Corporation) are produced by introducing the full-length human Factor VIII into baby hamster kidney cells. The resulting Factor VIII protein is then purified and does not contain proteins from animal sources. The biological activity of this product is the same as plasma derived human factor VIII. The active pharmaceutical ingredient is identical for both HELIXATE FS and KOGENATE FS because both APIs are produced by Bayer, HELIXATE FS is distributed by CLS Behring under an agreement between the two companies. The recommended prophylaxis dosing regimen for both drugs is 25IU/kg three times a week for adults and 25 IU/kg every other day for children.

[0273] RECOMBINATE

[0274] RECOMBINATE® (available from the Baxter Healthcare Corporation) is a glycoprotein synthesized by a Chinese Hamster Ovary (CHO) cell line genetically engineered to co-express human Factor VIII and Von Willebrand Factor (VWF). The CHO cell line secretes recombinant Factor VIII (rFVIII) into the cell culture medium. Factor VIII complexed with VWF is purified from the culture medium utilizing a series of chromatography columns. The synthesized rFVIII produced by the CHO cells has the same biological effects as human Factor VIII. Structurally the protein has a similar combination of heavy and light chains as found in human Factor VIII. RECOMBINATE is formulated as a sterile, nonpyrogenic, lyophilized powder preparation of concentrated recombinant Factor VIII for intravenous injection. One international unit (IU) of this formulation contains about 1.5 μg of Factor VIII protein. The final product contains no more than 2 ng recombinant VWF (rVWF) per IU of rFVIII, which will not have any clinically relevant effect in patients with Von Willebrand's disease. The product contains no preservative. One IU of this product causes a Factor VIII peak activity two times higher than the patient baseline, assuming that the patient's baseline is <1%. Therefore to increase the FVIII activity of an X % in a patient the IU dose should be around (X*kg)/2. In a PK study involving 69 patients, the circulating mean half-life for RECOMBINATE was 14.6 ± 4.9 hours (n=67). The actual baseline recovery observed with RECOMBINATE was 123.9 ± 47.7 IU/dL (n=23) and the calculated ratio of actual to expected recovery with RECOMBINATE was 121.2 ± 48.9%.

[0275] Delivery of Factor VIII Products via Embodiments of the Invention.

[0276] As described herein, various embodiments of the invention including swallowable device 10 and therapeutic preparation 100 can be adapted for the oral delivery of Factor VIII replacement therapies for

the treatment of various clotting disorders. According to one embodiment, a prospective prophylactic dosing regimen for oral delivery of Factor VIII using embodiments of device 10 would correspond to one pill per day orally and the amount of IU's per pill would be calculated based on the recommendations of the active pharmaceutical ingredient's manufacturer. Other embodiments contemplate delivery more frequently (e.g., twice a day) or less frequently (once every 2, 3, 5, 7 or other number of days). More specific dosing regimens for particular types of Factor VIII are described below.

[0277] Dosing Regimens for Particular Types of Factor VIII

[0278] HELIXATE® FS and KOGENATE® FS have a recommended dose of 25 IU/kg three times per week (approximately every two days). For these compounds, the total dose for a 70 kg adult would be 1750 IU every two days, which would translate into 875 IU per day when delivered orally with embodiments of oral device 10/capsule 20. Both HELIXATE FS and KOGENATE FS have a specific activity of 4000 IU/mg of protein, therefore, the daily dose of 875 IU would translate to about 0.22 mg of Factor VIII, which is easily delivered by a single oral capsule 20 per day. ELOCTATE is administered every 4 days at a dose of 50 IU/kg. Accordingly, the total dose for a normal weight adult, 70 kg, would be 3500 IU every 4 days which would which correspond to about 875 IU per capsule per day when delivered orally with embodiments of a capsule 20. Because the specific activity of ELOCTATE is 4000-10020 IU/mg of protein, a daily dose range of 0.22-0.00 mg can be administered by a single oral capsule. The recommended dosage for AFSTYLA and PEGylated FVIII is about 20-50 IU/kg every two or every three days.

[0279] The range for an adult of 70 kg would then be: 1400-3500 IU every two/three days which would correspond to about 700-1750 IU per day when the administration occurs every two days or about 467-1167 IU per day, when the administration occurs every three days. Accordingly, these dosages would correspond to a daily dose between 467-1750 IU (depending on the patient and active principle) when delivered orally with embodiments of device 10. For AFSTYLA, which has a specific activity of 7400-16000 IU/mg of Factor VIII, a dose range of 0.03-0.24 mg would be delivered by one oral device daily. Finally, for PEGylated FVIII, that has a specific activity of 2700-8000 IU/mg, the daily dose range orally delivered by a single capsule 20 would be 0.06-0.65 mg. All these doses can be adjusted, for example increased (e.g., 2x, 3x, 4x etc.) to account for decreases in bioavailability of a particular route of administration (e.g., delivery into the peritoneal cavity, vs IV injection). Even when the dose is doubled, tripled etc., a single device daily oral device 10/capsule 20 would be sufficient to administer a therapeutic dose of Factor VIII.

[0280] For some Factor VIII products (e.g., ADVATE®, REFACTO®, NOVOEIGHT®), the specific activity of one milligram of Factor VIII protein is reported on the prescribing information, facilitating the calculation of the weight of drug (e.g., mg) that would be administered using embodiments of device 10 to achieve the desired therapeutic effects (e.g., improved clotting, reducing clotting time etc.). For example, ADVATE's recommended dosing regimen is 20-40 IU/kg every other day. For a 70 kg adult, this works out to 1400-2800 IU every other day and 700-1400 IU per day. Since the specific activity of

ADVATE is 4000-10,000 IU/mg of protein (e.g., Factor VIII), the therapeutic range of drug in mg would be in the range of 0.07-0.14 mg (considering the dose in IU and the highest factor activity of 10,000 IU/mg) or in the range of 0.175-0.35mg (considering the dose in IU and the lowest factor activity of 4000 IU/mg). These doses can be administered by a single oral device 10/capsule 20 per day. Similar calculations for REFACTO which has a daily dosing regimen of 40-225 IU/kg, therefore 280-15750 IU for a 70 kg adult, would translate to a 0.03-1.73 mg daily dose range if the factor activity is 9110 IU/mg and 0.02-1.15 mg, if the factor activity is 13700 IU/mg. One capsule per day can deliver these therapeutic ranges. NOVOEIGHT has a specific factor activity of 8340 IU/mg and a dosing regimen of 20-60 IU/kg every other day which considers the whole prophylactic dosing range for children and adults where the lowest and highest doses are combined in a single range. For an adult, according to one or more embodiments, a daily low dose of NOVOEIGHT would be 2800 IU/day: (e.g., assuming 70 kg patient X 2 X 20 IU/kg) and a high dose 8400 IU/day (assuming a 70 kg X 2 X 60 IU/kg). When converted to milligrams, the dose range would be from about 0.34 to about 1 mg per day when delivered orally using embodiments of capsule 20 or other oral delivery means contemplated by embodiments of the invention. Various embodiments of device 10 and capsule 20 can be readily configured to deliver any of the aforementioned doses of Factor VIII products by producing a needle or other form of tissue penetrating member 40, 140 which contain such doses. In particular, a single needle or other form of tissue penetrating member 40 or 140 can be configured to contain any of these doses.

[0281] Embodiment Accounting For Adjustments in Dosing of Factor VIII and other Clotting Factors

[0282] In various embodiments, adjustments may be made for changes in the potency (expressed as IU/mg) of a given source or batch of Factor VIII or any clotting factors described herein). So for example, for increased potency (e.g., increased IU per mg for Factor VIII or other Clotting Factor), the mgs per capsule can be decreased, resulting in a decreased number of required capsules. Also, allowances in the dosage can be made for reduced bioavailability of a given clotting factor delivered via an oral route of administration by embodiments of oral device 10 vs the bio-availability of drug when delivered by IV infusion. In particular, allowances can be made for such reduced bioavailability of clotting factor within oral device 10 delivered to a particular location in the GI tract such as one or more of the small intestinal wall, peritoneum or peritoneal cavity. For example, in the case of delivery of Factor VIII (or other clotting factor described herein) to the peritoneal cavity by an embodiment of oral device 10, the bioavailability may be approximately 50% of that of IV infused Factor VIII. See, "Intravascular of VWF and Factor VIII following Intraperitoneal Injection and differences from Intravenous and Subcutaneous Injection in Mice." Q. Shi. et. al., Hemophilia (2012), 18, 639-646, which is fully incorporated by reference herein for all purposes. Thus, any of described dosages of Factor VIII in terms of mg of drug per capsule or number of capsules taken may be doubled or increased by another amount relative to other decreases in bioavailability.

[0283] Embodiments of Therapeutic Compositions Comprising Factor VII

[0284] As discussed above, various embodiments of the invention provide therapeutic compositions comprising clotting factors such as Factor VII for the treatment of various clotting disorders such as congenital and acquired hemophilia. Accordingly, a brief explanation will now be presented on Factor VII compounds. Factor VII (described as EC 3.4.21.21, blood-coagulation factor VII, activated blood coagulation Factor VIIa formerly known as proconvertin) is one of the proteins that cause blood to clot in the coagulation cascade. Factor VII is used as a replacement therapy in hemophilia patients with factor VII deficiency as well as patient who develop inhibitory antibodies to one or more of the clotting factors including Factor VIII. It has also been used off label to control bleeding in trauma patients and for treatment of cerebral hemorrhage. It is an enzyme of the serine protease class and is produced by liver cells and excreted into the circulation. The excreted glycoprotein is a single- chain of 406 amino-acids with a mass of approximately 50 kDa, which is converted to its active form by proteolytic cleavage and other mechanism. Several factors can lead to proteolytic cleavage of Factor VII including factor IXa, factor Xa, factor XIIa or thrombin. After proteolysis of a 38 to 60 amino-acid sequence, FVII is converted to two chains connected by a disulfide bond, which comprises the activated form or FVIIa. The light chain (152 aa) contains domains for epidermal growth factor and insane phospholipids binding and carboxylated glutamic acid residues that bind to calcium ions, while the heavy chain (254aa) contains the serine protease activity that catalyzes the activation of Factor IX and X to their activated forms.

[0285] As used herein, the term "Factor VII" includes both the uncleaved FVII (zymogen) and activated form of Factor VII known as Factor VIIa. Also various embodiments of Factor VII may correspond to polypeptides comprising the 1-406 polypeptide sequence of human wild-type human Factor VII (as disclosed in U.S. Pat. No. 4,784,950), or FVII derived from another species (e.g., bovine, porcine, canine, murine). Other forms of FVII contemplated and delivered by embodiments of the invention may include the natural allelic variations of Factor VII that may exist, and any form or degree of glycosylation or other post-translational modification. The term "Factor VII" also includes variants of Factor VII which have the same or higher biological activity compared to the activity of the wild form, these particular variants including polypeptides differing from the wild type Factor VIIa by insertion, deletion or substitution one or more amino acids. The term "biological activity of Factor VII" includes the ability to generate thrombin, for example on the surface of activated platelets.

[0286] A typical dose of Factor VIIa for the treatment of bleeding episodes in hemophilia patients with inhibitors is 90 μg/kg repeated every 2-6 hours until hemostasis is achieved. Doses of 13.3-22 μg/kg are used for FVII replacement therapy and 20-160 μg/kg for trauma and intra cerebral hemorrhage patients. Unfortunately, Factor VIIA has a short half-life of 2-4 hours necessitating frequent IV injection. While subcutaneous injection is being investigated as an alternative to intravenous injection to extend the half-life of Factor VIIA, the bioavailability of Factor VII through subcutaneous injection is only 21-30%. Given this low bioavailability, subcutaneous injection this is not a very efficient or practical route of administration for Factor VII. As such, delivery of Factor VII, or VIIa by embodiments of the

swallowable delivery device 10 present some distinct advantages including increased bioavailability and the reduction or elimination of the need for multiple infusions over the course of a day. The latter factor providing for significant improvement in the patient's quality of life by eliminating the need for trips to the hospital or for home infusions.

[0287] Delivery of Factor VII Products via Embodiments of the Invention.

[0288] According to one embodiment, a prospective prophylactic dosing regimen for oral delivery of Factor VII using embodiments of device 10 would correspond to one pill per day orally and the amount of IU's per pill would be calculated based on the recommendations of the active pharmaceutical ingredient's manufacturer. Other embodiments contemplate delivery more frequently (e.g., twice a day) or less frequently (once every 2, 3, 5, 7 or other number of days). Specific dosages of Factor VII which may be delivered by embodiments of device 10 can be in the range of about 10-90 μg /kg, with specific dose ranges of 70-90 μg /kg every two to three hours for patients with acquired hemophilia, 15-30 μg /kg every four to six hours for patients with congenital Factor VII deficiency, 90 μg /kg every two hours for patients with Congenital Hemophilia A or B with inhibitors or 90 μg /kg every two to four hours for patients with Glanzmann's Thrombasthenia. The dosage of the preceding conditions being administered during bleeding episodes until hemostasis is achieved (e.g., the bleeding stops and/or is significantly reduced). For patients with Congenital Hemophilia A or B with inhibitors, after hemostasis is achieved, a dose of 90 μg /kg may be administered every three to six hours so as to maintain the hemostatic plug achieved by the earlier administration. Allowances can also be made for converting the preceding dosages to active units with the unit denomination of IUs.

[0289] Types of Factor VII delivered by Embodiments of the Invention

[0290] A number of types of Factor VII may be used be delivered by embodiments of the invention including in therapeutic preparations 100. In various embodiments, the type of Factor VII included in therapeutic preparation 100 will typically comprise human Factor VII or VIIa and may be a naturally occurring form or a recombinant form. The former includes Factor VII or VIIa derived from human plasma. The latter include variants of wild type Factor VII or VIIa which have the same or higher biological activity compared to the activity of the wild form, but differing from the wild type Factor VII or VIIa by insertion, deletion or substitution one or more amino acids. Particular commercial types of Factor VII which may be used by embodiments of the invention include without limitation NOVOSEVEN®, NOVOSEVENRT® and ARYOSEVEN® which are described below. These and other forms of Factor VII can be obtained/produced in a variety of ways, for example, from the non cryoprecipitable fraction from human plasma or by genetic engineering from cells or from transgenic animals. According to particular embodiments, a human Factor VII is produced in the milk of nonhuman transgenic mammals, genetically engineered to produce this protein. Preferably it is the milk of a transgenic rabbit or goat. The secretion Factor VII by the mammary glands, allowing its secretion into the milk of the transgenic mammal, involves the control of the expression of the Factor VII-tissue-dependent manner. Such control methods are well known in the art. The expression control is performed using the

sequences allowing expression of the protein to a particular tissue of the animal. These include promoter sequences WAP, beta-casein, beta-lactoglobulin and signal peptide sequences. In particular, an extraction process of proteins of interest from milk of transgenic animals is described in the patent European Patent EP 0 264 166.

[0291] NOVOSEVEN and NOVOSEVEN RT

[0292] According to one or more embodiments, the type of Factor VII delivered by embodiments of device 10 may correspond NOVOSEVEN®, a recombinant form of human Factor VIIa (available from the NovoNordisk Corporation), which has received FDA approval for uncontrolled bleeding in hemophilia patients. It may also correspond to a variant of NOVOSEVEN known as NOVOSEVEN® RT, also available from NovoNordisk. In particular, NOVOSEVENRT is manufactured to be room temperature allowing it to be stored without refrigeration. In related or additional embodiments it may correspond to a biosimilar of Factor VIIa such as ARYOSEVEN® available from Aryogen Pharmed.

[0293] A brief of summary of NOVOSEVEN will now be provided, this summary also applies to NOVOSEVENRT®. NOVOSEVEN is a vitamin K-dependent glycoprotein consisting of 406 amino acid residues (MW 50 K Dalton). Though a recombinant form, NOVOSEVEN is structurally similar to human plasma-derived Factor VIIa. The pharmacokinetic profile of NOVOSEVEN is varied when comparing dosing for treatment of hemophilia vs congenital factor VII deficiency. According clinical studies reported by NovoNordisk in the prescribing information for NOVOSEVEN, a single-dose pharmacokinetics of NOVOSEVEN (17.5, 35, and 70 μg/kg) exhibited dose- proportional behavior in 15 subjects with hemophilia A or B. The median apparent volume of distribution at steady state was 103 mL/kg (range 78-139). Median clearance was 33 mL/kg/hr (range 27-49). The median residence time was 3.0 hours (range 2.4-3.3), and the T½ was 2.3 hours (range 1.7-2.7). The median in vivo plasma recovery was 44% (30-71%). In clinical studies for the treatment of Factor VII deficiency, single dose pharmacokinetics of NOVOSEVEN at doses of 15 and 30 μg per kg body weight, showed no significant difference between the two doses used with regard to dose-independent parameters: total body clearance (70.8-79.1 mL/hr x kg), volume of distribution at steady state (280-290 mL/kg), mean residence time (3.75-3.80 hr), and half-life (2.82-3.11 hr). The mean in vivo plasma recovery was approximately 20% (18.9%-22.2%).

[0294] Dosing Regimens for NOVOSEVEN and NOVOSEVENRT

[0295] Dosage regimens of NOVOSEVEN and NOVOSEVEN RT for patients with acquired hemophilia and congenital Factor VII deficiency will now be described along with the rationale for each clotting disorder. These regimens apply to both NOVOSEVEN and NOVOSEVENRT. The recommended dose of NOVOSEVEN or NOVOSEVENRT for the treatment of patients with Hemophilia is in the range of 70-90μg/kg patient weigh repeated every 2-3 hours until hemostasis is achieved. For a 70 kg patient, the required dose would therefore be 4.9-6.3 mg of NOVOSEVEN rFVIIa every 2-3 hours. Considering the bioavailability of FVII is ~50% via intraperitoneal delivery, the mean dosing for a 70 kg patient would be

in the range of 9.8-12.6 mg every 2-3 hours. For embodiments of capsule 20 configured to carry between about 3mg to 9mg o drug, this work out to about 1 to 3 capsules every 2 to 3 hours.

[0296] For patients with congenital Factor VII deficiency, the recommended dose of NOVOSEVEN or NOVOSEVENRT is 15-30 μg/kg body weight every 4 hours. Therefore, for a 70 kg patient the required dose of drug is in the range of 1.05-2.10 mg every four hours. Considering the reduced bioavailability (50%) of Factor VII via intraperitoneal delivery, the required dose of NOVOSEVEN or NOVOSEVENRT, would be about 2.10-4.20 mg every four hours. For embodiments of capsule 20 configured to carry between about 1 mg to 4mg of drug, this work out to about 1 to 2 capsules every four hours.

[0297] Embodiments of Therapeutic Compositions Comprising Factor IX

[0298] As discussed herein, various embodiments of the invention provide therapeutic compositions comprising clotting factors such as Factor IX for the treatment of various clotting disorders such as congenital and acquired hemophilia. Accordingly, a brief explanation will now be presented on Factor IX compounds. Coagulation Factor IX (FIX) is a critical component in the coagulation cascade and is a causative agent for hemostatic response to injury. It is synthesized in the liver as a single-chain glycoprotein with a molecular weight of 57,000. Deficiency of FIX leads to hemophilia B. FIX is activated by activated Factor IX (FIXa) in the intrinsic coagulation pathway. FIXa in combination with Factor VIIIc, promulgates the coagulation cascade by activating Factor X (FX) to Xa, thus resulting in the conversion of prothrombin to thrombin leading to the formation of a fibrin clot. The activation of FIX comprises of two (2) steps, first the internal peptide bond is cleaved resulting in the formation of a two-chain intermediate bridged by a disulphide bond(s). Then, a second specific peptide bond in the amino terminal region of the heavy chain is cleaved, forming the activated factor IX (FIXa). FIX therapy has been shown to temporarily restore hemostasis for patients suffering with hemophilia. There are several FIX replacement product and therapies currently available in the market. They include the following: Alphanine SD, Alprolin, Bebulin, Bebulin VH, Benefix, Idelvion, Ixinity, Immunine, Mononine, Profilnine SD, Proplex and Rixubis. A brief description of five (5) of the above-mentioned types of Factor IX is presented below.

[0299] Mononine (CSL Behring)

[0300] Mononine® is a human derived form of Factor IX available from CLS Behring. It is purified from extraneous plasma-derived proteins by the use of immunoaffinity chromatography. Specifically, a murine monoclonal antibody to FIX is used as an affinity ligand to capture and extract FIX. Mononine is infused intravenously. The dosage of FIX in Mononine depends upon the weight of the patient and desired FIX (IU/dL). A 1 ml formulation of Mononine consists of 100 IU (each IU represents one active FIX) of FIX, mannitol, polysorbate 80, histidine, sodium hydroxide and/or hydrochloric acid.

[0301] There were two clinical studies (patients, n = 81) conducted by Behring on the use Mononine for the treatment of hemophilia B which are reported in the prescribing information for Mononine (see http://labeling.cslbehring.com/pi/us/mononine/en/mononine-prescribing-information.pdf.). The studies

evaluated both safety and efficacy evaluation of Mononine. Infusion of FIX complex concentrates that contained varying but significant amounts of the other liver- dependent blood coagulation proteins (e.g., Factors II, VII and X) into Hemophilia B patients, resulted in FIX recoveries ranging from approximately 0.57-1.1 IU/dL rise per IU/kg body weight infused with plasma half-lives for Factor IX ranging from approximately 23 hours to 31 hours. Five (5) patients (6%) reported adverse reactions. The doses administered ranged between 71 to 161 IU/kg to 36 subjects. Mean recovery tended to decrease as the dose of Mononine increased: 1.09 ± 0.52 K at doses >75- 95 IU/kg (n=38), 0.98 ± 0.45 K at doses >95-115 IU/kg (n=21), 0.70 ± 0.38 K at doses >115-135 IU/kg (n=2), 0.67 K at doses >135-155 IU/kg (n=1), and 0.73 ± 0.34 K at doses >155 IU/kg (n=5). Among the 36 subjects who received these high doses, only one (2.8%) reported an adverse experience with a possible relationship to Mononine ("difficulty in concentrating"; subject recovered). There were no thrombogenic complications observed or reported for any patients. A small percentage of patients exhibited hypersensitivity reactions. Including anaphylaxis. Other reactions include but not limited to headache, nausea, fever, chills, flushing, vomiting, tingling, lethargy, and hives. The dosage regimen depends on the FIX levels during hemostasis in patients with minor and/or major surgery. Pharmacokinetic (PK) and pharmacodynamics (PD) data has not been reported for Mononine.

[0302] Idelvion (CSL Behring)

[0303] Idelvion which is available from CLS Behring is a recombinant form of Factor IX which is fused with recombinant albumin. This fused form of the drug increases the half-life of Factor IX in Idelvion by several times that of the plasma derived FIX's. For example for a single dose of 75 IU/kg Idelvion, the T½ was determined to be 104 hours. The C_{max} was determined to be 82 IU/dL, whereas the rate of clearance (Cl) was 0.84 ml/h/kg. The mean volume of distribution (V_{ss}) was determined to be 1.20 dL/kg. Overall, the PK parameters for Idelvion were similar when compared between single and repeated dosing. For routine prophylaxis, the dosage for patients (>12 years) is about 25-40 IU/kg body weight every 7 days. The dosage for control and prevention of bleeding episodes depends upon various parameters (e.g., weight, desired FIX rise) as well as the condition of the patient.

[0304] Rixubis (Baxter pharmaceuticals)

[0305] Rixubis® (also known as BAX326) is a recombinant form of coagulation Factor IX available from Baxter Pharmaceuticals which is used for the treatment of hemophilia in adults and children. BAX326 was developed using a recombinant Chinese hamster ovary (CHO) cell clone in suspension culture. Its amino acid sequence is identical to that of the Ala-148 allelic form of pdFIX (Immunine) and its structural and functional characteristics are similar as well. The CHO cell line that secretes FIX is purified by affinity chromatography. The specific activity of Rixubis was determined to be >200 IU per milligram of protein. The formulation for Rixubis consists of L-histidine, sodium chloride, calcium chloride, mannitol, sucrose and polysorbate 80. Post administration, Rixubis increases the plasma levels of FIX, and temporarily corrects the coagulation defect in hemophilic patients by decreasing the (in-vitro thromboplastin time) aPTT. The mean C_{max} was determined to be 0.95 IU/dL, whereas the mean

clearance rate (Cl) was 6.0 ml/kg/hr. The mean apparent volume of distribution (V_{ss}) was 178.6 mL/kg. The half-life was measured at 25.4 hours. The PK data above is for repeated dosing of Rixubis. The recommended dose is 0.7 IU of plasma (0.7 % of normal) for patients older than 12 years.

[0306] AlphaNine SD (Alpha Therapeutic Corporation)

[0307] Coagulation Factor IX (Human), AlphaNine® SD, is a purified, solvent detergent treated, virus filtered preparation of Factor IX derived from human plasma. It contains a minimum of 150 IU's Factor IX/mg protein; Factor VII (proconvertin), Factor II (prothrombin) and Factor X (Stuart Prower Factor) which are below the limit of detection (less than 0.04 Factor VII unit, less than 0.05 Factor II unit, and less than 0.05 Factor X unit per IU Factor IX). AlphaNine SD is a sterile, lyophilized preparation intended for intravenous administration only. Each vial is a single dose container. AlphaNine SD is labeled with the Factor IX potency expressed in International Units (IU). AlphaNine SD formulation contains 0.04 unit of heparin, 0.2 mg of dextrose, 1.0 μg polysorbate 80 and 0.10 μg tri(n-butyl) phosphate/IU of Factor IX. Contains no preservatives. AlphaNine SD is a purified formulation of Factor IX containing not less than 150 IU Factor IX activity/mg of total protein. AlphaNine SD contains non-therapeutic levels of Factor II, Factor VII and Factor X.

[0308] BeneFIX (Pfizer)

[0309] BeneFIX®, coagulation Factor IX (Recombinant), is a purified protein produced by recombinant DNA technology. The product is formulated as a sterile, non-pyrogenic, lyophilized powder preparation intended to be reconstituted for intravenous injection. It is available in single-use vials containing the labeled amount of Factor IX activity, expressed in International Units (IU). Each vial contains nominally 250, 500, 1000, 2000, or 3000 IU of recombinant coagulation factor IX. The potency (in IU) is determined using an *in vitro* one-stage clotting assay against the World Health Organization (WHO) International Standard for Factor IX concentrate. One IU is the amount of factor IX activity present in 1 mL of pooled, normal human plasma. After reconstitution of the lyophilized drug product, the concentrations of excipients are sodium chloride, L-histidine, 0.8% sucrose, glycine, and polysorbate 80. The specific activity of BeneFIX is greater than or equal to 200 IU per milligram of protein. It has a primary amino acid sequence that is identical to the Ala148 allelic form of human Factor IX, and has structural and functional characteristics similar to those of endogenous factor IX. BeneFIX is produced by a genetically engineered Chinese hamster ovary (CHO) cell line that is extensively characterized. The CHO cell line secretes recombinant factor IX into a defined cell culture medium, and the recombinant factor IX is purified by chromatographic purification process.

[0310] Dosing Regimens for Specific Types of Factor IX

[0311] The standard dosing regimen for Factor IX may be calculated using the following formula body weight (kg) x the desired increase in the plasma concentration in Factor IX (e.g.,% or IU/dL plasma) x the reciprocal of actual increase in Factor IX (IU/dL plasma per IU/kg body weight). For daily prophylactic treatment of Factor IX deficient patients, the recommended dosing regimen of Mononine is 20-30 IU/kg every 24 hours. Thus, for a 70 kg adult this works out to 1400-2100 IU. Also since the specific activity of

Factor IX in Mononine is approximately 190 IU/mg. The amount in weight of Factor IX required for a 70 kg person ranges would be between approximately 7 mg to 10.6 mg per day. Embodiments of the oral delivery device 10 including capsule 20 may be configured to deliver between 3-9 mg of therapeutic agent (e.g., clotting factor) per pill depending upon the number of tissue penetrating members 140 contained in the capsule. Using embodiments of capsules 20 which contain about 3 mg of drug, this works out to about 3 to 4 capsules per day, for a 4mg per pill, it works out to 2 to 3 capsules per day. In various embodiments, the desired delivered dose can be achieved by a first capsule configured to deliver a first dose of Factor IX (e.g., 5mg) and a second capsule can be configured to deliver a second dose (e.g., 2 mg). Such embodiments of multiple devices 10s may be configured as a daily dosing regimen for the delivery of Factor IX or other clotting factor described herein. The above calculations are based on the potency (e.g., IU/mg) of commercially available forms Factor IX. As described above for Factor VIII, adjustments can be made to account for the reduced bioavailability drug for an intraperitoneal administration versus an intravenous injection.

[0312] Some recombinant forms of Factor IX's such as Rixubis, are administered at a dosage of 40-60 IU/kg body(e.g., 70 kg subject, 2800 IU – 4200 IU), twice a week. The specific activity of Rixubis has been reported as 200 IU/mg (dosage, 0.25 mg/kg). Therefore, this works out to 14 mg – 21 mg of Factor IX protein biweekly. Using embodiments of device 10 having dose ranges from 3 to 7 mg, this works out to about 2 to 7 capsules twice a week. Other administration schedules are also contemplated including daily. So, for example, for a 3 mg dose per capsule and 21 mg per week, the patient may take 1 capsule per day. For a 3 mg capsule and 42 mg per week this works out to two capsules per day.

[0313] For the long acting Idelvion or Alprolix (which has a specific activity of 55-84 IU/mg), the dosing of drug is less frequent. An initial dose of 75 IU/kg/week (for a 70 kg patient, ~70 mg/week) is recommended which can be gradually increased to 100 IU/kg (which for a 70 kg patient works out to ~100 mg/week). In case of AlphaNine, the dosage for a 70 kg patient will translate to 2800 IU (70 kg patient, 18.6 mg/week of AlphaNine). Similar dosages are replicated to other FIX's such as BeneFIX. For example, a 70 kg person under Benefix (FIX) therapy (2000 IU) would require 10 mg of protein. The dosage regimen would depend up on the prophylaxis of the patient. Pfizer has reported in their prescribing information that, for routine prophylaxis, BeneFIX was administered at a dosage of 72.5 IU/kg twice weekly which works out to about 0.36 mg/ kg patient weight. For a 70kg patient this in turn works out to a dose of about~25 mg twice/week or 50mg/week. For a capsule having 8-9mg of drug (using multiple tissue penetrating members), this works out to about 3 capsules twice a week or if administered daily about 1 capsule per day.

[0314] As described above for Factor VIII, adjustments in the dosage of a Factor IX product can readily be made to account for the reduced bioavailability of Factor IX in any of the above commercially available forms when delivered in the peritoneal cavity.

[0315] Embodiments of Therapeutic Compositions Comprising Factor X

[0316] As discussed above, various embodiments of the invention provide therapeutic compositions comprising Factor X for the treatment of various clotting disorders such as congenital and acquired hemophilia. Accordingly, a brief explanation will now be presented on Factor X compounds. Factor X (EC 3.4.21.6) is a serine protease that is involved in the coagulation cascade. It is a vitamin K dependent protein synthesized in the liver. The FX gene (F10) is 22 kb long and is located at 13q34-ter, 2.8 kb downstream of the F7 gene. The coding sequence is homologous to the other vitamin K-dependent proteins and is divided into eight exons, each of which encodes a specific domain within the protein: exon 1 encodes the signal peptide, exon 2 encodes the propeptide and gamma-carboxyglutamic acid (Gla) domain, exon 3 encodes the aromatic amino acid stack domain, exons 4 and 5 each code for the epidermal growth factor-like regions, exon 6 encodes the activation domain, and exons 7 and 8 encode the catalytic domain. The mature 2- chain form of FX consists of a light chain of 139 amino acids and heavy chain linked by a disulphide bond. The light chain contains the Gla domain and two epidermal growth factor domains; the heavy chain contains the catalytic serine protease domain. The complete 59- kDa 2-chain protein circulates in the plasma at a concentration of 10 μg/ml.

[0317] The active form of Factor X, (known as FXa) is a catalytic serine protease that is produced when the zymogen is cleaved in the heavy chain, releasing the 52-residue activation peptide that contains the His236, Asp228 and Ser379 catalytic site. Activation occurs through the extrinsic pathway via tissue Factor:FVIIa complex with calcium ions on a phospholipid surface. Intrinsic pathway activation occurs through the serine protease FIXa and its cofactor FVIIIa in the presence of calcium ions on a phospholipid surface. Factor Xa is the most important activator of prothrombin, cleaving prothrombin to generate thrombin in complex with FVa, Ca++ and phospholipids. FXa can also activate FV and FVIII (Brown DL 2008). FXa is inhibited by forming a complex with antithrombin, the complex is rapidly cleared from the circulation.

[0318] Factor X deficiencies are autosomal recessive and affect 1 in 500000 to 1 in 1000000 people in the general worldwide population. There are two classified types of deficiency: type I in which both the levels and the activity of the FX protein are decreased and type II in which the levels of the protein are unaffected but the activity is reduced. The symptoms fall within a wide range of severity that goes from mild to moderate and severe depending on the functional FX circulating levels.

[0319] The current therapy for FX deficiency is a replacement therapy with extracted complexes from human plasma. Commercially available products that contain FX complexed with other coagulation factors in varying amounts include Factor X P (CSL Behring) and Coagadex (BDI Pharma). A description of each of these compounds along with dosing regimens and rationale will now be described.

[0320] Coagadex

[0321] Coagadex® is manufactured by BDI Pharma. Coagadex contains approximately 100 IU/mL of coagulation Factor X and the following inactive ingredients: chloride, phosphate, citrate, sucrose and sodium. The specific activity of Coagadex is typically 80-137 IU per mg protein. The dose and duration

of the treatment depend on the severity of the Factor X deficiency, location and extent of the bleeding, and on the patient's clinical condition. The dose to achieve a desired in vivo peak increase in Factor X level may be calculated using the following formula: Dose (IU) = Body Weight (kg) x Desired Factor X Rise (IU/dL) x 0.7. Therefore, for a 70 kg patient, the Factor X dosage to be administered has been determined to be 1960 IU, where the desired Factor X rise has been estimated to be at ~40 %. Plasma levels of Factor X between 10 to 40 % have been described as hemostatically effective. Based on the half-life of 24 to 40 hours, the administration of Factor X every 24 hours should generally be sufficient if continued treatment is needed.

[0322] Based upon the above estimates, the amount of Factor X protein in 1960 IU has been determined to be 14.3 mg, where the specific activity of the coagulation factor X has been considered to be 137 IU factor X/mg protein. Considering the bioavailability of intra-peritoneal delivery to be about 50% vs IV administration (requiring the dosage for intraperitoneal delivery to be doubled), the required dosage for a 70 kg patient translates to about 28.6 mg every 24 hours. For patients weighing 50kg, the dose would be around 20 mg and for those weighing 80 the dose would be 33 mg. Given this 20 to 33 mg dose range, for embodiments of device 10/capsule 20 having between about 4 to 9mg of drug per capsules (e.g., contained in two to three tissue penetrating members 140). This works out to about 2 to 8 capsules every 24-hours.

[0323] Factor X P(Behring)

[0324] Factor X P®, manufactured by CLS Behring is comes as a powder and solvent for solution for injection containing about 600-1200 IU human coagulation factor X. The formulation also consists of 600 IU of human coagulation factor IX, a key coagulation factor in the treatment of hemophilia. The specific activity of factor X varies between 4-60 IU factor X/mg protein and 3-38 IU factor /mg protein. The dose and duration of the treatment depend on the severity of the Factor X deficiency, location and extent of the bleeding, and on the patient's clinical condition. The calculation of the required dose of Factor X is based on the empirical finding that one unit FX per kg body weight raises the plasma factor X activity by approximately 1.5 % of normal activity. The required dosage is determined using the following formula: Dose (IU) = body weight [kg] x desired factor X rise [% or IU/dl] x 0.7. Therefore, for a 70 kg patient the Factor X dosage to be administered has been determined to be 1960 IU, where the desired Factor X rise has been estimated to be at ~40 %. Plasma levels of Factor X of between 10 to 40 % have been described as hemostatically effective. Based on the half-life of Factor X of a between 24 to 40 hours, the administration of FX every 24 hours should generally be enough if continued treatment is needed. Based upon the above estimates, the amount of factor X protein in 1960 IU has been determined to be 32.6 mg, where the specific activity of the coagulation factor X has been considered to be 60 IU factor X/mg protein. Considering the bioavailability of intra-peritoneal delivery to be about 50% vs IV administration, the required dosage for a 70 kg patient translates to about 65.2 mg of drug every 24 - 40 hours. For embodiments of device 10/capsule 20 having between about 5 to 9mg of drug per capsule, this works out to about 7 capsules every 24-40 hours.

[0325] Embodiments of Bio equivalents of Clotting Factors or other Coagulation Proteins Described Herein

[0326] Various embodiments of the invention also contemplate the compositions and use of coagulation or other proteins which encompass proteins having amino acid sequences that vary from the clotting factors described herein (e.g., including Factors VII, VIIa VIII, IX and X) including their analogues and derivatives but which none the less have the same or equivalent level of bioactivity (e.g., clotting function) equivalent being within 10%, more preferably within 5% and still more preferably within 2% of the bioactivity of a particular clotting factor (e.g., Factor VIII). Suitable analogues to Factors VII and VIIa, and methods for making them include those described in U.S. Patent Application Serial No. 12/354,509 which is incorporated by reference herein for all purposes. Suitable analogues to Factor VIII and methods for making them include those described in U.S. Patent No. 5,112,950 which is incorporated by reference herein for all purposes. Suitable analogues to Factor IX and methods for making them include those described in U.S. Patent Application Serial No. 12/302,167 which is incorporated by reference herein for all purposes. Suitable analogues to Factor X and methods for making them include those described in U.S. Patent No. 6,905,846 which is incorporated by reference herein for all purposes. Such variant analogue clotting factors may include one or more additions, deletions, or substitutions of amino acids (e.g., leucine vs lysine, etc.) when compared to the amino-acid sequence of a parent coagulating protein (e.g., Factor VIII) but still exhibit biological activity (e.g., coagulation function) that is essentially equivalent to that of the described coagulating proteins in terms of the ability of the variant to function in the coagulation cascade. In particular embodiments, the variants can include deletions in the B-domain of the Factor VIII molecules. The variants may also include modifications of the Factor VIII molecule via Fc fusion or PEGylation, such variations being selected to increase the circulatory half-life of a selected Factor VIII molecule. Similar approaches may be used to increase the circulating half-life of one or more of Factors VII, IX and X.

[0327] Pharmacokinetic Metrics for Delivery of Clotting Factors or other Coagulation Protein into the Intestinal Wall or Surrounding Tissue.

[0328] Embodiments of the invention delivering one or more clotting factors (e.g., Factor VII, VIII, IX, X etc.) or other coagulation protein into the intestinal wall (e.g., the small intestine) or surrounding tissue (e.g., peritoneal tissue) also provide benefits with regard to one or more pharmacokinetic metrics. Pharmacokinetic metrics of note in this regard include without limitation, C_{max}, the peak plasma concentration of a drug after administration; T_{max}, the time to reach C_{max}; and $T^{1}/_{2}$, the time required for the plasma concentration of the drug to reach half its C_{max} value after having reached C_{max}. These metrics can be measured using standard pharmacokinetic measurement techniques known in the art. For example, one approach plasma samples may be taken at set time intervals (e.g., one minute, five minutes, ½ hour, 1 hour, etc.) beginning and then after administration of the clotting factor or other coagulation protein or other therapeutic agent either by use of a swallowable device or by non-vascular injection. The concentration of the drug in plasma can then be measured using one or more appropriate analytical

methods such as GC-Mass Spec, LC-Mass Spec, HPLC or various ELISA (Enzyme-linked immunosorbent assays) which can be adapted for the particular drug such as clotting factors. Also various activity assays can be used to quality measure drug concentration (pharmacokinetics) and also measure the pharmacodynamics of the drug. One group of such assays for clotting factors including clotting time measurements such as prothrombin times. A concentration (directly derived and/or indirectly derived through bioactivity) vs. time curve (also herein referred to as a concentration profile) can then be developed using the measurements from the plasma samples. The peak of the concentration curve corresponds to C_{max} and the time at which this occurs corresponds to T_{max}. The time in the curve where the concentration reaches half its maximum value (i.e., C_{max}) after having reached C_{max} corresponds to T½ this value is also known as the elimination half-life of the drug. The start time for determination of C_{max} can be based on the time at which the injection is made for the case on non-vascular injection and the point in time at which embodiments of the swallowable device advances one or more tissue penetrating members (containing the drug) into the small intestine or other location in the GI tract (e.g., the large intestine). In the latter case, this time can be determined using one or more means including a remote-controlled embodiment of the swallowable device which deploys the tissue penetrating members into the intestine wall in response to an external control signal (e.g., an RF signal) or for an embodiment of the swallowable device which sends an RF or other signal detectable outside the body when the tissue penetrating members have been deployed. Other means for detection of tissue penetrating member deployment into the small intestine are contemplated such as one or more medical imaging modalities including, for example, ultrasound or fluoroscopy. In any one of these studies, appropriate animal models can be used, for example, dog, pig, rat etc. in order to model the human pharmacokinetic response.

[0329] Thus, various embodiments provide a therapeutic composition 100 (also referred to herein as a preparation) comprising a clotting factor (e.g., Factor VII, VIII, IX or X) or other coagulation protein or other therapeutic agent. The composition is adapted for insertion into an intestinal wall after oral ingestion, wherein upon insertion, the composition releases clotting factor or other coagulation protein into the bloodstream from the intestinal wall to achieve a C_{max} faster than an extravascularly injected dose of clotting factor or other coagulation protein, that is to say, achieving a C_{max} for the inserted form of clotting factor or other coagulation protein in a shorter time period (e.g., a smaller T_{max}) than that for a dose of clotting factor or other coagulation protein that is injected extravascularly. Note, that the dose of clotting factor or other coagulation protein in the composition delivered into the intestinal wall and the dose delivered by extravascular injection, may, but need not, be comparable to achieve these results. In various embodiments, the composition is configured to achieve a T_{max} for clotting factor or other coagulation protein (e.g., by release of clotting factor into the bloodstream from the intestinal wall or surrounding tissue (e.g., peritoneal tissue) which is about 80%, or 50%, or 30%, or 20%, or 10% of a t_{max} for an extravascularly injected dose of clotting factor. Such an extravascularly injected dose of clotting factor can be, for example, a subcutaneous injection or an intramuscular injection. In certain embodiments, the C_{max} attained by delivering clotting factor or other coagulation protein by insertion into

the intestinal wall or surrounding tissue is substantially greater, such as 5, 10, 20, 30, 40, 50, 60, 70, 80 or even a 100 times greater, than the C_{max} attained when the clotting factor or other coagulation protein is delivered orally without insertion into the intestinal wall for example, by a pill or other convention oral form of clotting factor or other coagulation protein. In some embodiments, the clotting factor (or other coagulation protein) composition is configured to produce a long-term release of clotting factor (or other coagulation protein) which can include periods in the range of about 1 to 60 days, with particular embodiments of 6 to 12 hours, 6 to 24 hours, 12 to 24 hours, 12 to 36 hours,1 to 2 days, 1 to three days, 1 to 5 days, 1 to 10 days, 1 to 20 days, two days, three days, five days, seven days, ten days, 15 days, 20 days, 30 days, 40 days, 45 days 50 days and 60 days. Also, the composition can be configured to produce a long-term release of clotting factor (or other coagulation protein) with a selectable T½. For example, the selectable T½ may be 6, or 9, or 12, or 15 or 18, 24, 36, 48 and 60 hours.

[0330] Any appropriate dose of clotting factor (or other coagulation protein) for a particular patient may be used, depending on factors such as weight, age, condition, other drugs being taken etc. For example, the dose of clotting factor (e.g., Factor VII, VIII, IX or X) or other coagulation protein administered may range from about 1 to 10 mg, with particular ranges of 1-5, 1-4, 2-4, 2-5 and 2-3 mg and individual doses of 1, 2, 3, 4, 5, 6, 7, 8, 9 and 10 mg. When administered subcutaneously, clotting factor typically has a T_{max} in the bloodstream of about 130 hours. Therefore, when administered in a therapeutic clotting factor (e.g., Factor VIII) composition as described herein, the T_{max} of the clotting factor will be shortened, e.g., to about 80%, or 50%, or 30%, or 20%, or 10% of the T_{max} for clotting factor when it is subcutaneously injected.

[0331] Various embodiments also provide a clotting factor (or other coagulation protein) composition adapted for insertion into an intestinal and/or peritoneal wall after oral ingestion, wherein upon insertion, the composition releases a clotting factor (or other coagulation protein) into the blood stream from the intestinal wall or surrounding tissue (e.g., peritoneal tissue) to achieve a T½ that is greater than a T½ for an orally ingested dose of a clotting factor (or other coagulation protein) that is not inserted into the intestinal wall. For example, the T½ of the dose inserted into the intestinal wall may be 100 or 50 or 10 or 5 times greater than the dose that is not inserted into the intestinal wall.

[0332] According to one or more embodiments, the clotting factor (or other coagulation protein) may be in solid form, such as a solid form composition configured to degrade in the intestinal wall such as the wall of the small intestine or the peritoneal wall. Also according to one or more embodiments, the solid form composition may include a tissue penetrating feature such as a pointed tip. According to particular embodiments, the solid form clotting factor (e.g., Factor VIII) composition may be in the form of a shaft with a pointed tip, such as a needle or dart, allowing the composition to be penetrate and be inserted into the intestinal wall or peritoneal wall. The clotting factor (or other coagulation protein) composition may comprise at least one biodegradable material and/or may comprise at least one pharmaceutical excipient, including a biodegradable polymer such as PGLA or a sugar such as maltose. In other embodiments, the

clotting factor (or other coagulation protein) may in a semi-solid or liquid form encased or otherwise fabricated into embodiments of the tissue penetrating member.

[0333] Various embodiments of the clotting factor (or other coagulation protein)) composition described herein may be adapted to be orally delivered in a swallowable capsule. In certain embodiments such a swallowable capsule may be adapted to be operably coupled to a mechanism having a first configuration and a second configuration, the clotting factor (or other coagulation protein) composition being contained within the capsule in the first configuration and advanced out of the capsule and into the intestinal wall and/or surrounding tissue (e.g., peritoneal tissue) in the second configuration. Such an operably coupled mechanism may comprise at least one of an expandable member, an expandable balloon, a valve, a tissue penetrating member, a valve coupled to an expandable balloon, or a tissue penetrating member coupled to an expandable balloon.

[0334] In some embodiments, the clotting factor (e.g., Factor VII, VIII, IX or X) or other coagulation protein may be configured to be delivered within a lumen of a tissue penetrating member and/or the clotting factor (or other coagulation protein) composition may be shaped as a tissue penetrating member advanceable into the intestinal wall. The tissue penetrating member may be sized to be completely contained within the intestinal wall, and/or it may include a tissue penetrating feature for penetrating the intestinal wall, and/or it may include a retaining feature for retaining the tissue penetrating member within the intestinal wall. The retaining feature may comprise, for example, a barb. In some embodiments, the tissue penetrating member is configured to be advanced into the intestinal wall or surrounding tissue (e.g., peritoneal tissue) by the application of a force (e.g., a mechanical force) to a surface of the tissue penetrating member. Desirably, the tissue penetrating member has sufficient stiffness and/or column strength to be advanced completely into the intestinal wall and/or the surface of the penetrating member by the application of the mechanical or other force (e.g., electromagnetic,). In various embodiments, the column strength/stiffness of the tissue penetrating member can range from about 1 to 20 lbs., 7 to 20 lbs. or 8 to 12 lbs., with individual embodiments of 7, 8, 9, 10 and 11 lbs. The column strength can be achieved by selection of one or more of the material selection and diameter of the tissue penetrating member. In many embodiments, the tissue penetrating member is configured to be operatively coupled to an expandable balloon or other expandable member which applies the force upon expansion. In some embodiments, the tissue penetrating member is configured to be directly coupled to a structure applying the force (e.g., a spring, a shaft and the like or even an expandable device). In these and related embodiments, the tissue penetrating member is configured to detach from a structure applying the force when a direction of the force changes.

[0335] Various aspects of the invention also provide other embodiments of a swallowable delivery device for the delivery of medications 100 in addition to those described above. According to one or more such embodiments, the swallowable delivery device can include one or more expandable balloons or other expandable devices for use in delivering one or more tissue penetrating members including medication 100 into the wall of an intestine, such as the small intestine. Referring now to Figs. 12-20,

another embodiment of a device 110 for the delivery of medication 100 to a delivery site DS in the gastro-intestinal (GI) tract, can comprise a capsule 120 sized to be swallowed and pass through the intestinal tract, a deployment member 130, one or more tissue penetrating members 140 containing medication 100, a deployable aligner 160 and a delivery mechanism 170. In some embodiments, medication 100 (also referred to herein as preparation 100) may itself comprise tissue penetrating member 140. The deployable aligner 160 is positioned within the capsule and configured to align the capsule with the intestine such as the small intestine. Typically, this will entail aligning a longitudinal axis of the capsule with a longitudinal axis of the intestine; however, other alignments are also contemplated. The delivery mechanism 170 is configured for delivering medication 100 into the intestinal wall (and in some embodiments into the peritoneum) and will typically include a delivery member 172 such as an expandable balloon or other expandable member. The deployment member 130 is configured for deploying at least one of the aligner 160 or the delivery mechanism 170. As will be described further herein, all or a portion of the capsule wall is degradable by contact with liquids in the GI tract so as to allow those liquids to trigger the delivery of medication 100 by device 110. As used herein, "GI tract" refers to the esophagus, stomach, small intestine, large intestine and anus, while "Intestinal tract" refers to the small and large intestine. Various embodiments of the invention can be configured and arranged for delivery of medication 100 into both the intestinal tract as well as the entire GI tract.

[0336] Device 110 including tissue penetrating member 140 can be configured for the delivery of liquid, semi-liquid or solid forms of medication 100 (e.g., one or more clotting factors described herein) or combinations of all three. Whatever the form, medication 100 desirably has a material consistency allowing the medication to be advanced out of device 110, into the intestinal wall (small or large intestine) or other luminal wall in the GI tract and then degrade within the intestinal wall or surrounding tissue (e.g., the peritoneum or other peritoneal cavity) to release the drug or other therapeutic agent 101 into the wall or surrounding tissue and then into the blood stream. The material consistency of medication 100 can include one or more of the hardness, porosity and solubility of the preparation (in body fluids such as those found in the wall of the small intestine or the peritoneal cavity, e.g., the serosal fluids). The material consistency of medication 100 can be achieved by selection and use of one or more of the following: i) the compaction force used to make the preparation; ii) the use of one or more pharmaceutical disintegrants known in the art; iii) use of other pharmaceutical excipients; iv) the particle size and distribution of the preparation (e.g., micronized particles); and v) use of micronizing and other particle formation methods known in the art.

[0337] Capsule 120 is sized to be swallowed and pass through the intestinal tract. The size can also be adjusted depending upon the amount of drug to be delivered as well as the patient's weight and adult vs. pediatric applications. Typically, the capsule will have a tubular shape with curved ends similar to a vitamin. In these and related embodiments, capsule lengths 120L can be in the range of 0.5 to 2 inches and diameters 120D in the range of 0.1 to 0.5 inches with other dimensions contemplated. The capsule 120 includes a capsule wall 121w, having an exterior surface 125 and an interior surface 124 defining an

interior space or volume 124v. In some embodiments, the capsule wall 121w can include one or more apertures 126 sized for the outward advancement of tissue penetrating members 140. In addition to the other components of device 110, (e.g., the expandable member etc.) the interior volume can include one or more compartments or reservoirs 127.

[0338] The capsule can be fabricated from various biodegradable gelatin materials known in the pharmaceutical arts, but can also include various enteric coatings 120c, configured to protect the cap from degradation in the stomach (due to acids etc.), and then subsequently degrade in the higher pH's found in the small intestine or other area of the intestinal tract. In various embodiments, the capsule 120 can be formed from multiple portions one or more of which may be biodegradable. In many embodiments, capsule 120 can be formed from two portions 120p such as a body portion 120p" (herein body 120p") and a cap portion 120p' (herein cap 120p), where the cap fits onto the body, e.g., by sliding over or under the body (with other arrangements also contemplated). One portion, such as the cap 120p', can include a first coating 120c'configured to degrade above a first pH (e.g., pH 5.5) and the second portion such as the body 120p" can include a second coating 120c" configured to degrade above a second higher pH (e.g.6.5). Both the interior 124 and exterior 125 surfaces of capsule 120 are coated with coatings 120c' and 120c" so that either portion of the capsule will be substantially preserved until it contacts fluid having the selected pH. For the case of body 120p" this allows the structural integrity of the body 120p" to be maintained so as to keep balloon 172 inside the body portion and not deployed until balloon 130 has expanded. Coatings 120c' and 120c" can include various methacrylate and ethyl acrylate based coatings such as those manufactured by Evonik Industries under the trade name EUDRAGIT. These and other dual coating configurations of the capsule 120 allows for mechanisms in one portion of capsule 120 to be actuated before those in the other portion of the capsule. This is due to the fact that intestinal fluids will first enter those portions where the lower pH coating has degraded thus actuating triggers which are responsive to such fluids (e.g., degradable valves). In use, such dual coating embodiments for capsule 120 provide for targeted drug delivery to a particular location in the small intestine (or other location in the GI tract), as well as improved reliability in the delivery process. This is due to the fact that deployment of a particular component, such as aligner 160, can be configured to begin in the upper area of the small intestine (e.g., the duodenum) allowing the capsule to be aligned within the intestine for optimal delivery of the drug (e.g., into the intestinal wall) as well as providing sufficient time for deployment/actuation of other components to achieve drug delivery into the intestinal wall while the capsule is still in the small intestine or other selected location.

[0339] As is discussed above, one or more portions of capsule 120 can be fabricated from various biocompatible polymers known in the art, including various biodegradable polymers which in a preferred embodiment can comprise cellulose, gelatin materials and PGLA. Other suitable biodegradable materials include various enteric materials described herein as well as lactide, glycolide, lactic acid, glycolic acid, para-dioxanone, caprolactone, trimethylene carbonate, caprolactone, blends and copolymers thereof.

[0340] In various embodiments, the wall 120w of the capsule is configured to be degradable by contact with liquids in the GI tract, for example liquids, in the small intestine. In preferred embodiments, the capsule wall is configured to remain intact during passage through the stomach, but then to be degraded in the small intestine. In one or more embodiments, this can be achieved by the use of an outer coating or layer 120c on the capsule wall 120w, which only degrades in the higher pH's found in the small intestine and serves to protect the underlying capsule wall from degradation within the stomach before the capsule reaches the small intestine (at which point the drug delivery process is initiated by degradation of the coating as is described herein). In use, such coatings allow for the targeted delivery of a therapeutic agent in a selected portion of the intestinal tract such as the small intestine including for example, into the wall of the small intestine.

[0341] Similar to capsule 20, in various embodiments, capsule 120 can include various radio-opaque, echogenic or other materials for location of the device using one or more medical imaging modalities known in the art such as fluoroscopy, ultrasound, MRI, etc. Such materials can be arranged in distinct bands or other shapes on the capsule so as to readily provide visual indicators of the capsule in the intestinal tract using the one or more medical imaging modalities. They may also be configured to allow the physician to discern if the capsule has or has not deployed. For example, according to one embodiment the markers can be placed around the center area of the capsule such when the balloon or other expandable member expands the marker is torn apart and is no longer discernable under imaging and/or has a different shape when imaged.

[0342] As is discussed further herein, in many embodiments, one or more of the deployment member 130, delivery member 172 or deployable aligner 160, may correspond to an expandable balloon that is shaped and sized to fit within capsule 120. Accordingly, for ease of discussion, deployment member 130, delivery member 172 and deployable aligner 160 will now be referred to as balloon 130, 160 and 172; however, it should be appreciated that other devices including various expandable devices are also contemplated for these elements and may include for example, various shape memory devices (e.g., an expandable basket made from shape memory biodegradable polymer spires), expandable piezo electric devices, and/or chemically expandable devices having an expanded shape and size corresponding to the interior volume 124v of the capsule 120.

[0343] One or more of balloons 130, 160 and 172 can comprise various polymers known in the medical device arts. In preferred embodiments such polymers can comprise one or more types of polyethylene (PE) which may correspond to low density PE(LDPE), linear low-density PE (LLDPE), medium density PE (MDPE) and high-density PE (HDPE) and other forms of polyethylene known in the art. In one more embodiments using polyethylene, the material may be cross-linked using polymer irradiation methods known in the art so. In particular embodiments radiation-based cross-linking may be used as to control the inflated diameter and shape of the balloon by decreasing the compliance of the balloon material. The amount of radiation may be selected to achieve a particular amount of cross linking to in turn produce a particular amount of compliance for a given balloon, e.g., increased irradiation can be used to produce

stiffer less compliant balloon material. Other suitable polymers can include PET (polyethylene terephthalate), silicone and polyurethane. In various embodiments balloons 130, 160 and 172 may also include various radio-opaque materials known in the art such as barium sulfate to allow the physician to ascertain the position and physical state of the balloon (e.g., un-inflated, inflated or punctures. Balloons 130, 160 and 172 can be fabricated using various balloon blowing methods known in the balloon catheters arts (e.g., mold blowing, free blowing, etc.) to have a shape and size which corresponds approximately to the interior volume 124v of capsule 120. In various embodiments one or more of balloons 130, 160 and 172 and various connecting features (e.g., connecting tubes) can have a unitary construction being formed from a single mold. Embodiments employing such unitary construction provide the benefit of improved manufacturability and reliability since fewer joints must be made between one or more components of device 110.

[0344] Suitable shapes for balloons 130, 160 and 172 include various cylindrical shapes having tapered or curved end portions (an example of such a shape including a hot dog). In some embodiments, the inflated size (e.g., diameter) of one or more of balloons 130, 160 and 172, can be larger than capsule 120 so as to cause the capsule to come apart from the force of inflation, (e.g., due to hoop stress). In other related embodiments, the inflated size of one or more of balloons 130, 160 and 172 can be such that when inflated: i) the capsule 120 has sufficient contact with the walls of the small intestine so as to elicit a peristaltic contraction causing contraction of the small intestine around the capsule, and/or ii) the folds of the small intestine are effaced to allow. Both of these results allow for improved contact between the capsule/balloon surface and the intestinal wall so as deliver tissue penetrating members 40 over a selected area of the capsule and/or delivery balloon 172. Desirably, the walls of balloons 130, 160 and 172 will be thin and can have a wall thickness in the range of about 0.005 to 0.0001" more preferably, in the range of about 0.005 to 0.0001, with specific embodiments of about 0.004, 0.003, 0.002, 0.001, and 0.0005). Additionally in various embodiments, one or more of balloon 130, 160 or 172 can have a nested balloon configuration having an inflation chamber 160IC and extended finger 160EF as is shown in the embodiments of Fig. 13C. The connecting tubing 163, connecting the inflation chamber 160IC can be narrow to only allow the passage of gas 168, while the connecting tubing 36 coupling the two halves of balloon 130 can be larger to allow the passage of water.

[0345] As indicated above, the aligner 160 will typically comprise an expandable balloon and for ease of discussion, will now be referred to as aligner balloon 160 or balloon 160. Balloon 160 can be fabricated using materials and methods described above. It has an unexpanded and expanded state (also referred to as a deployed state). In its expanded or deployed state, balloon 160 extends the length of capsule 120 such that forces exerted by the peristaltic contractions of the small intestine SI on capsule 120 serve to align the longitudinal axis 120LA of the capsule 120 in a parallel fashion with the longitudinal axis LAI of the small intestine SI. This in turn serves to align the shafts of tissue penetrating members 140 in a perpendicular fashion with the surface of the intestinal wall IW to enhance and optimize the penetration of tissue penetrating members 140 into the intestinal wall IW. In addition to serving to align capsule 120

in the small intestine, aligner 160 is also configured to push delivery mechanism 170 out of capsule 120 prior to inflation of delivery balloon 172 so that the delivery balloon and/or mechanism is not encumbered by the capsule. In use, this push out function of aligner 160 improves the reliability for delivery of the therapeutic agent since it is not necessary to wait for particular portions of the capsule (e.g., those overlying the delivery mechanism) to be degraded before drug delivery can occur.

[0346] Balloon 160 may be fluidically coupled to one or more components of device 110 including balloons 130 and 172 by means of polymer tube or other fluidic couplings 162 which may include a tube 163 for coupling balloons 160 and 130 and a tube 164 for coupling balloon 160 and balloon 172. Tube 163 is configured to allow balloon 160 to be expanded/inflated by pressure from balloon 130 (e.g., pressure generated the mixture of chemical reactants within balloon 130) and/or otherwise allow the passage of liquid between balloons 130 and 160 to initiate a gas generating chemical reaction for inflation of one or both of balloons 130 and 160. Tube 164 connects balloon 160 to 172 so as to allow for the inflation of balloon 172 by balloon 160. In many embodiments, tube 164 includes or is coupled to a control valve 155 which is configured to open at a selected pressure so as to control the inflation of balloon 172 by balloon 160. Tube 164 may thus comprise a proximal portion 164p connecting to the valve and a distal portion 164d leading from the valve. Typically, proximal and distal portions 164p and 164d will be connected to a valve housing 158 as is described below.

[0347] Valve 155 may comprise a triangular or other shaped section 156 of a material 157 which is placed within a chamber 158c of a valve housing 158 (alternately, it may be placed directly within tubing 164). Section 157 is configured to mechanically degrade (e.g., tears, shears, delaminates, etc.) at a selected pressure so as to allow the passage of gas through tube 164 and/or valve chamber 158c. Suitable materials 157 for valve 155 can include bees wax or other form of wax and various adhesives known in the medical arts which have a selectable sealing force/burst pressure. Valve fitting 158 will typically comprise a thin cylindrical compartment (made from biodegradable materials) in which section 156 of material 157 is placed (as is shown in the embodiment of Fig. 13B) so as to seal the walls of chamber 158c together or otherwise obstruct passage of fluid through the chamber. The release pressure of valve 155 can be controlled through selection of one or more of the size and shape of section 156 as well as the selection of material 157 (e.g., for properties such as adhesive strength, shear strength etc.). In use, control valve 155 allows for a sequenced inflation of balloon 160 and 172 such that balloon 160 is fully or otherwise substantially inflated before balloon 172 is inflated. This, in turn, allows balloon 160 to push balloon 172 along with the rest of delivery mechanism 170 out of capsule 120 (typically from body portion 120p') before balloon 172 inflates so that deployment of tissue penetrating members 140 is not obstructed by capsule 120. In use, such an approach improves the reliability of the penetration of tissue penetrating members 140 into intestinal wall IW both in terms of achieving a desired penetration depth and delivering greater numbers of the penetrating members 140 contained in capsule 120 since the advancement of the members into intestinal wall IW is not obstructed by capsule wall 120w.

[0348] As is describe above, the inflated length 160l of the aligner balloon 160 is sufficient to have the capsule 120 become aligned with the lateral axis of the small intestine from peristaltic contractions of the intestine. Suitable inflated lengths 160l for aligner 160 can include a range between about ½ to two times the length 120l of the capsule 120 before inflation of aligner 160. Suitable shapes for aligner balloon 160 can include various elongated shapes such as a hotdog like shape. In specific embodiments, balloon 160 can include a first section 160' and a second section 160", where expansion of first section 160' is configured to advance delivery mechanism 170 out of capsule 120 (typically out of and second section 160" is used to inflate delivery balloon 172. In these and related embodiments, first and second sections 160' and 160" can be configured to have a telescope-style inflation where first section 160' inflates first to push mechanism 170 out of the capsule (typically from body portion 120p') and second section 160" inflates to inflate delivery member 172. This can be achieved by configuring first section 160' to have smaller diameter and volume than second section 160" such that first section 160' inflates first (because of its smaller volume) and with second section 160" not inflating until first section 60' has substantially inflated. In one embodiment, this can be facilitated by use of a control valve 155 (described above) connecting sections 160' and 160" which does not allow passage of gas into section 160" until a minimum pressure has been reached in section 160'. In some embodiments, the aligner balloon can contain the chemical reactants which react upon mixture with water or other liquid from the deploying balloon.

[0349] In many embodiments, the deployment member 130 will comprise an expandable balloon, known as the deployment balloon 130. In various embodiments, deployment balloon 130 is configured to facilitate deployment/expansion of aligner balloon 160 by use of a gas, for example, generation of a gas 169 from a chemical. The gas may be generated by the reaction of solid chemical reactants 165, such as an acid 166 (e.g., citric acid) and a base 166 (e.g., potassium bicarbonate, sodium bicarbonate and the like) which are then mixed with water or other aqueous liquid 168. The amount of reactants can be chosen using stoichiometric methods to produce a selected pressure in one or more of balloons 130, 160 and 72. The reactants 165 and liquids can be stored separately in balloon 130 and 160 and then brought together in response to a trigger event, such as the pH conditions in the small intestine. The reactants 165 and liquids 168 can be stored in either balloon, however in preferred embodiments, liquid 168 is stored in balloon 130 and reactants 165 in balloon 160. To allow for passage of the liquid 168 to start the reaction and/or the resulting gas 169, balloon 130 may be coupled to aligner balloon 160 by means of a connector tube 163 which also typically includes a separation means 150 such as a degradable valve 150 described below. For embodiments where balloon 130 contains the liquid, tube 163 has sufficient diameter to allow for the passage of sufficient water from balloon 130 to balloon 60 to produce the desired amount of gas to inflate balloon 160 as well inflate balloon 172. Also when balloon 130 contains the liquid, one or both of balloon 130 and tube 163 are configured to allow for the passage of liquid to balloon 160 by one or more of the following: i) the compressive forced applied to balloon 130 by peristaltic contractions of the small intestine on the exposed balloon 130; and ii) wicking of liquid through tube 163 by capillary action.

[0350] Tube 163 will typically include a degradable separation valve or other separation means 150 which separates the contents of balloon 130, (e.g., water 158) from those of balloon 160 (e.g., reactants 165) until the valve degrades. Valve 150 can be fabricated from a material such as maltose, which is degradable by liquid water so that the valve opens upon exposure to water along with the various liquids in the digestive tract. It may also be made from materials that are degradable responsive to the higher pH found in the intestinal fluids such as methacrylate-based coatings. The valve is desirably positioned at location on tube 163 which protrudes above balloon 130 and/or is otherwise sufficient exposed such that when cap 120p' degrades the valve 150 is exposed to the intestinal liquids which enter the capsule. In various embodiments, valve 150 can be positioned to lie on the surface of balloon 130 or even protrude above it (as is shown in the embodiments of Figs. 16A and 16B), so that is has clear exposure to intestinal fluids once cap 120p' degrades. Various embodiments of the invention provide a number of structures for a separation valve 150, for example, a beam like structure (where the valve comprises a beam that presses down on tube 163 and/or connecting section 136), or collar type structure (where the valve comprise a collar lying over tube 163 and/or connecting section 136). Still other valve structures are also contemplated.

[0351] Balloon 130 (or other expandable deployment device 130) has a deployed and a non-deployed state. In the deployed state, the deployment balloon 130 can have a dome shape 130d which corresponds to the shape of an end of the capsule. Other shapes 130s for the deployed balloon 130 are also contemplated, such as spherical, tube-shape, etc. The reactants 165 will typically include at least two reactants 166 and 167, for example, an acid such as citric acid and a base such as sodium bicarbonate. Other reactants 165 including other acids, e.g., acetic acid and bases, e.g., sodium hydroxide are also contemplated. When the valve or other separation means 150 opens, the reactants mix in the liquid and produce a gas such as carbon dioxide which expands the aligner balloon 160 or other expandable member.

[0352] In an alternative embodiment shown in Fig. 13B, the deployment balloon 130 can actually comprise a first and second balloon 130' and 130" connected by a tube 36 or other connection means 136 (e.g., a connecting section). Connecting tube 136 will typically include a separation valve 150 that is degradable by a liquid as described above and/or a liquid having a particular pH such as basic pH found in the small intestine (e.g., 5.5 or 6.5). The two balloons 130' and 130" can each have a half dome shape 130hs allowing them to fit into the end portion of the capsule when in the expanded state. One balloon can contain the chemical reactant(s) 165 (e.g., sodium bicarbonate, citric acid, etc.) the other the liquid water 168, so that when the valve is degraded the two components mix to form a gas which inflates one or both balloons 130' and 130" and in turn, the aligner balloon 160. For embodiments of device 10 configured for delivery of therapeutics agents into peritoneal cavity, additional amounts of reactants can be added to balloons 130' or 130" to increase the pressure developed.

[0353] In yet another alternative embodiment, balloon 130 can comprise a multi-compartment balloon 130mc, that is formed or other constructed to have multiple compartments 130c. Typically, compartments

130c will include at least a first and a second compartment 134 and 135 which are separated by a separation valve 150 or other separation means 150 as is shown in the embodiment of Fig. 14A. In many embodiments, compartments 134 and 135 will have at least a small connecting section 136 between them which is where separation valve 150 will typically be placed. A liquid 168, typically water, can be disposed within first compartment 134 and one or more reactants 165 disposed in second compartment 135 (which typically are solid though liquid may also be used) as is shown in the embodiment of Fig. 14A. When valve 150 opens (e.g., from degradation caused by fluids within the small intestine) liquid 168 enters compartment 135 (or vice versa or both), the reactant(s) 165 mix with the liquid and produce a gas 169 such as carbon dioxide which expands balloon 130 which in turn can be used to expand one or more of balloons 160 and 172.

[0354] Reactants 165 will typically include at least a first and a second reactant, 166 and 167 for example, an acid such as citric acid and a base such as sodium bi-carbonate or potassium bi-carbonate. As discussed herein, in various embodiments they may be placed in one or more of balloon 130 (including compartments 134 and 135 or halves 130' and 130") and balloon 160. Additional reactants, including other combinations of acids and bases which produce an inert gas by product are also contemplated. For embodiments using citric acid and sodium or potassium bicarbonate, the ratios between the two reactants (e.g., citric acid to potassium bicarbonate) can be in the range of about 1:1 to about 1:4, with a specific ratio of about 1:3. Desirably, solid reactants 165 have little or no absorbed water. Accordingly, one or more of the reactants, such as sodium bicarbonate or potassium bicarbonate can be pre-dried (e.g., by vacuum drying) before being placed within balloon 130. Other reactants 165 including other acids, e.g., acetic acid and bases are also contemplated. The amounts of particular reactants 165, including combinations of reactants can be selected to produce particular pressures using known stoichiometric equations for the particular chemical reactions as well as the inflated volume of the balloon and the ideal gas law (e.g., PV=nRT). In particular embodiments, the amounts of reactants can be selected to produce a pressure selected one or more of balloons 130, 160 and 172 to: i) achieve a particular penetration depth into the intestinal wall; and produce a particular diameter for one or more of balloons 130, 160 and 172; and iii) exert a selected amount of force against intestinal wall IW. In particular embodiments, the amount and ratios of the reactants (e.g., citric acid and potassium bicarbonate) can be selected to achieve pressures in one more of the balloons 130, 160 and 172 in the range of 10 to 15 psi, with smaller and larger pressures contemplated. Again the amounts and ratios of the reactants to achieve these pressures can be determined using known stoichiometric equations.

[0355] In various embodiments of the invention using chemical reactants 165 to generate gas 169, the chemical reactants alone or in combination with the deployment balloon 130 can comprise a deployment engine for 180 deploying one or both of the aligner balloon 160 and delivery mechanism 170 including delivery balloon 172. Deployment engine 180 may also include embodiments using two deployment balloons 130 and 130" (a dual dome configuration as shown in Fig. 13B), or a multi compartment balloon 130mc as shown in Fig. 14A. Other forms of a deployment engine 180 are also contemplated by various

embodiments of the invention such as use of expandable piezo-electric materials (that expand by application of a voltage), springs and other shape memory materials and various thermally expandable materials.

[0356] One or more of the expandable balloons 130, 160 and 172 will also typically include a deflation valve 159 which serves to deflate the balloon after inflation. Deflation valve 159 can comprise biodegradable materials which are configured to degrade upon exposure to the fluids in the small intestine and/or liquid in one of the compartments of the balloon so as to create an opening or channel for escape of gas within a particular balloon. Desirably, deflation valves 159 are configured to degrade at a slower rate than valve 150 to allow sufficient time for inflation of balloons, 130, 160 and 172 before the deflation valve degrades. In various embodiments, of a compartmentalized balloon 130, deflation valve 159 can correspond to a degradable section 139 positioned on an end portion 131 of the balloon as is shown in the embodiment of Fig. 14A. In this and related embodiments, when degradable section 139 degrades from exposure to the liquid, balloon wall 132 tears or otherwise comes apart providing for a high assurance of rapid deflation. Multiple degradable sections 139 can be placed at various locations within balloon wall 132.

[0357] In various embodiments of balloon 172, deflation valve 159 can correspond to a tube valve 173 attached to the end 172e of the delivery balloon 172 (opposite to the end which is coupled to the aligner balloon) as is shown in the embodiment of Fig. 13B. The tube valve 173 comprises a hollow tube 173t having a lumen that is obstructed at a selected location 173l with a material 173m such as maltose or other sugar that degrades upon exposure to fluid such as the fluid in the small intestine. The location 173l of the obstructing material 173m in tube 173t is selected to provide sufficient time for the delivery balloon 172 to inflate and deliver the tissue penetrating members 40 into the intestinal wall IW before the obstructing material dissolves to open valve 173. Typically, this will be close to the end 173e of the tube 173t, but not quite so as to allow time for liquid to have to wick into the tube lumen before it reaches material 173m. According to one or more embodiments, once the deflation valve 173 opens, it not only serves to deflate the delivery balloon 172 but also the aligner balloon 160 and deployment balloon 130 since in many embodiments, all three are fluidically connected (aligner balloon being fluidically connected to delivery balloon 172 and the deployment balloon 130 being fluidically connected to aligner balloon 160). Opening of the deflation valve 173 can be facilitated by placing it on the end 172e of the delivery balloon 172 that is forced out of capsule 120 by inflation of the aligner balloon 160 so that the deflation valve has good exposure to liquids in the small intestine. Similar tube deflation valves 173 can also be positioned on one or both of aligner balloon 162 and the deployment balloon 130. In these later two cases, the obstructing material in the tube valve can be configured to degrade over a time period to allow sufficient time for inflation of delivery balloon 172 and advancement of tissue penetrating members 140 into the intestinal wall.

[0358] Additionally, as further backup for insured deflation, one or more puncture elements 182 can be attached to the inside surface 124 of the capsule such that when a balloon (e.g., balloon 130, 160, 172)

fully inflates it contacts and is punctured by the puncture element 182. Puncture elements 182 can comprise short protrusions from surface 124 having a pointed tip. In another alternative or additional embodiment of means for balloon deflation, one or more of the tissue penetrating members 140 can be directly coupled to the wall of 172w of balloon 172 and configured to tear away from the balloon when they detach, tearing the balloon wall in the process.

[0359] A discussion will now be presented of tissue penetrating members 140. In one or more embodiments, tissue penetrating member 140 can be fabricated from various drugs and other therapeutic agents 101, one or more pharmaceutical excipients (e.g., disintegrants, stabilizers, etc.) and one or more biodegradable polymers. The later materials chosen to confer desired structural and material properties to the penetrating member (for example, column strength for insertion into the intestinal wall, or porosity and hydrophilicity for control the release of drug). Referring now to Figs. 18A-18F, in many embodiments, the penetrating member 140 can be formed to have a shaft 144 and a needle tip 145 or other pointed tip 145 so as to readily penetrate tissue of the intestinal wall as shown in the embodiment of Fig. 18A. In preferred embodiments, tip 145 has a trocar shape as is shown in the embodiment of Fig. 18C. Tip 145 may comprise various degradable materials (within the body of the tip or as a coating), such as sucrose or other sugar which increase the hardness and tissue penetrating properties of the tip. Once placed in the intestinal wall or surrounding tissue (e.g., the peritoneal wall or peritoneal cavity, the penetrating member 140 is degraded by the interstitial fluids within the wall tissue and/or serosal fluids within the pectineal cavity so that the drug or other therapeutic agent 101 dissolves in those fluids and is absorbed into the blood stream. For embodiments, where the tissue penetrating member is positioned in the peritoneal cavity, the tissue penetrating member is configured to be degraded by fluids within the cavity including the serosal fluids within the cavity where the clotting factor or other therapeutic agents is then transported across the visceral and parietal peritoneal walls and into the blood stream. One or more of the size, shape and chemical composition of tissue penetrating member 140 can be selected to allow for dissolution and absorption of drug 101 in a matter of seconds, minutes or even hours. Rates of dissolution can be controlled through a variety of means including through the use of various disintegrants known in the pharmaceutical arts. Examples of disintegrants include, but are not limited to, various starches such as sodium starch glycolate and various cross-linked polymers such as carboxymethyl cellulose. The choice of disintegrants can be specifically adjusted for the fluids and environment within the wall of the small intestine and/or peritoneum or the peritoneal cavity. In particular embodiments, the tissue penetrating member 140 may include a degradation or dissolution feature 147 (herein feature 147) configured to accelerate or otherwise enhance the degradation and/or dissolution of the tissue penetrating member 140 in the serosal and other fluids in the peritoneal cavity PC so as to enhance the release of clotting factor or other therapeutic agent 101 into the blood stream. In particular embodiments, feature 147 may correspond to an aperture or hole148 going partly or all other way through tissue penetrating member 140 as is shown in Fig. 18G. Hole or aperture 149 allows the ingress of tissue fluids (e.g., serosal fluids) into the interior 140i of member 140. Feature 147 may also correspond to one or more channels or grooves149 on a

surface 140s of member 140 as is shown Figs 18H and 18I. Channel or groove 149 enhances the surface area of member 140 available for contact with tissue fluids and thus enhances the rate of dissolution and/or degradation of the tissue penetrating member. In additional or related embodiments, feature 147, including aperture 148 or groove 149 may be positioned and configured to serve as a mechanical weak point (e.g., seam in the case of groove 149) to allow tissue penetrating member to be readily broken or fractured into smaller pieces by the mechanical forces applied by the body to the tissue penetrating member 140 when it is positioned in the peritoneal cavity PC. Such forces may include one or more of the forces from the movement of the internal organs (e.g., the intestines) as well as those from movement of the abdominal wall from contraction of the abdominal musculature or respiration. In use, such degradation features 147 enhance the rate of dissolution and/or degradation of the tissue penetrating member by enhanced surface area for contact with tissue fluids as well by allowing the penetrating member to be readily broken into smaller pieces with yet even more surface area for contact with tissue fluids. Desirably, though not necessarily, one or more features 147 are positioned and otherwise configured such that while they allow member 140 to be broken down by forces applied from the patient's body, they still allow the tissue penetrating member to have sufficient column strength to be advanced from capsule 20 by mechanical forces applied to an end 140e of the tissue penetrating member opposite the pointed tip 145. Such force being applied by delivery member 50 or component of actuating mechanism 60. In various embodiments, such column strength of tissue penetrating member 140 with one or more degradation/dissolution features 147 can be in the range from 0.1 to 1lbs.

[0360] Tissue penetrating member 140 will also typically include one or more tissue retaining features 143 such as a barb or hook to retain the penetrating member within the tissue of the intestinal wall IW or peritoneum after advancement. Retaining features 143 can be arranged in various patterns 143p to enhance tissue retention such as two or more barbs symmetrically or otherwise distributed around and along member shaft 144 as is shown in the embodiments of Figs. 18A and 18B. Additionally, in many embodiments, penetrating member will also include a recess or other mating feature 146 for attachment to a coupling component on delivery mechanism 170.

[0361] Tissue penetrating member 140 is desirably configured to be detachably coupled to platform 175 (or other component of delivery mechanism 170), so that after advancement of the tissue penetrating member 140 into the intestinal wall, the penetrating member detaches from the balloon. Detachability can be implemented by a variety of means including: i) the snugness or fit between the opening 174 in platform 175 and the member shaft 144); ii) the configuration and placement of tissue retaining features 143 on penetrating member 140; and iii) the depth of penetration of shaft 144 into the intestinal wall. Using one or more of these factors, penetrating member 140 be configured to detach as a result of balloon deflation (where the retaining features 143 hold the penetrating member 140 in tissue as the balloon deflates or otherwise pulls back away from the intestinal wall) and/or the forces exerted on capsule 120 by a peristaltic contraction of the small intestine.

[0362] In a specific embodiment, the detachability and retention of tissue penetrating member 140 in the intestinal wall IW can be enhanced by configuring the tissue penetrating member shaft 144 to have an inverse taper 144t as is shown in the embodiment of Fig.18C. The taper 144t on the shaft 144 is configured such that the application of peristaltic contractile forces from the intestinal wall on the shaft result in the shaft being forced inward (e.g., squeezed inward). This is due to the conversion by shaft taper 144t of the laterally applied peristaltic force PF to an orthogonal force OF acting to force the shaft inward into the intestinal wall. In use, such inverse tapered shaft configurations serve to retain tissue penetrating member 140 within the intestinal wall so as to detach from platform 175 (or other component of delivery mechanism 170) upon deflation of balloon 172. In additional embodiments, tissue penetrating members 140 having an inverse tapered shaft may also include one or more retaining features 143 to further enhance the retention of the tissue penetrating member within intestinal wall IW once inserted.

[0363] As described above, in various embodiments, tissue penetrating member 140 can be fabricated from a number of drugs and other therapeutic agents 101. Also according to one or more embodiments, the tissue penetrating member may be fabricated entirely from drug 101 (e.g., such as a clotting factor such as Factor VIII) or may have other constituent components as well, e.g., various pharmaceutical excipients (e.g., binders, preservatives, disintegrants, etc.), polymers conferring desired mechanical properties, etc. Further, in various embodiments one or more tissue penetrating members 140 can carry the same or a different drug 101 (or other therapeutic agent) from other tissue penetrating members. The former configuration allows for the delivery of greater amounts of a particular drug 101 (e.g., a particular clotting factor), while the later, allows two or more different drugs to be delivered into the intestinal wall at about the same time to facilitate drug treatment regimens requiring substantial concurrent delivery of multiple drugs. In embodiments of device 110, having multiple delivery assemblies 178 (e.g., two, one on each face of balloon 172), a first assembly 178' can carry tissue penetrating members having a first drug 101 and a second assembly 178" can carry tissue penetrating members having a second drug 101.

[0364] Typically, the drug or other therapeutic agent 101 carried by the tissue penetrating member 140 will be mixed in with a biodegradable material 105 to form tissue penetrating member 140. Material 105 may include one or more biodegradable polymers such as PGLA, cellulose, as well as sugars such as maltose or other biodegradable material described herein or known in the art. In such embodiments, the penetrating member 140 may comprise a substantially heterogeneous mixture of drug 101 and biodegradable material 105. Alternatively, the tissue penetrating member 140 may include a portion 141 formed substantially from biodegradable material 105 and a separate section 142 that is formed from or contains therapeutic agent 101 (e.g., Factor VIII or other clotting factor CF) as shown in the embodiment of Fig.18D. In one or more embodiments, section 142 may correspond to a pellet, slug, cylinder or other shaped section 142s containing drug 101. Shaped section 142s may be pre-formed as a separate section which is then inserted into a cavity 142c in tissue penetrating member 140 as is shown in the embodiments of Figs. 18E and 18F. Alternatively section 142s may be formed by adding of drug preparation 100 to cavity 142c. In embodiments, where drug preparation 100 is added to cavity 142c,

preparation may be added in as a powder, liquid, or gel which is poured or injected into cavity 142c. Shaped section 142s may be formed of drug 101 by itself or a drug preparation containing drug 101 and one or more binders, preservatives, disintegrants and other excipients. Suitable binders include polyethylene glycol (PEG) and other binders known in the art. In various embodiments, the PEG or other binder may comprise in the range of about 10 to 90% weight percent of the section 142s, with a preferred embodiment for insulin preparations of about 25-90 weight percent. Other excipients which may be used for binders in tissue penetrating member 140 may include, for example, PLA, PLGA, PGLA, Cyclodextrin, Cellulose, Methyl Cellulose, maltose, Dextrin, Sucrose and PGA and combinations thereof. Further information on the weight percent of excipients in section 142 may be found in Table 5. For ease of discussion, section 142 is referred to as a pellet in the table, but the data in Table 5 are also applicable to other embodiments of section 142 described herein.

[0365] In various embodiments, the weight of tissue penetrating member 140 can range between about 10 to 15 mg, with larger and smaller weights contemplated. For embodiments of tissue penetrating member 140 fabricated from maltose, the weight can range from about 11 to 14 mg. In various embodiments, depending upon the drug 101 and the desired delivered dose, the weight percent of drug in member 140 can range from about 0.1 to about 15%. In exemplary embodiments, these weight percentages correspond to embodiments of members 140 fabricated from maltose or PGLA, however they are also applicable to any of the biodegradable materials 105 used in the fabrication of members 140, for example polyethylene, polyethylene oxide (PEO), and other like materials. The weight percent of drug or other therapeutic agent 101 in member 140 can be adjusted depending upon the desired dose as well as to provide for structural and stoichiometric stability of the drug and also to achieve a desired concentration profile of the drug in the blood or other tissue of the body. Various stability tests and models (e.g., using the Arrhenius equation) known in the art and/or known rates of drug chemical degradation may be used to make specific adjustments in the weight per cent range. Table 5 lists the dose and weight percent range for insulin and a number of other drugs which may be delivered by tissue penetrating member 140. In some cases, Table 5 lists ranges as well a single value for the dose. It should be appreciated that these values are exemplary and other values recited herein including those in the claims are also considered. Further, embodiments of the invention also consider variations around these values including for example, ± 1, ± 5, ± 10, ± 25, and even larger variations. Such variations are considered to fall within the scope of an embodiment claiming a particular value or range of values. Table 5 also lists the weight percentage of drug in section 142 for various drugs and other therapeutic agents. Again, section 142 may have any number of shapes but for ease of discussion is referred to as a pellet. Also according to some embodiments, the amount of drug listed in Table 5, may be dispersed throughout the tissue penetrating member 140 and need not be contained in a section 142.

TABLE 5

Drug	Dose Via Capsule**	% Weight of Drug in the needle	% Weight of drug in pellet
Insulin	4-9 units, 5 -30 units, 1-50 units	2 - 15%	10 - 75%
Exenatide	1-10 ug, 1-20 ug, 10 ug	<1%, 0.1 -1 %	0.2 - 1%
Liraglutide	0.1-1 mg, 0.5-2 mg, 0.6 mg	3 - 6%	25 - 40%
Pramlintide	15 - 120 ug	0.1 - 1 %	0.5 - 6%
Growth Hormone	0.2 - 1 mg, 0.1-4 mg	2 - 10%	10 - 50%
Somatostatin and Analogs	50 - 600 ug, 10-100 ug	0.3 - 8%	2 - 35%
GnRH and Analogs	0.3 - 1.5 mg, 0.1 -2 mg	2 - 15%	15 - 75 %
Vasopressin	2 - 10 units	<1%, 0.1 - 1 %	0.2 - 1%
PTH and Analogues	0.1 to 10 ug, 10-30 ug, 20 ug	1 - 2%	0.5 - 2%
Interferons and analogs			
1. For Multiple Sclerosis	0.03 - 0.25 mg	0.1 - 3%	1.5 - 15%
2. For Hep B and HepC	6 -20 ug	0.05 - 0.2 %	0.2 - 1%
Adalimumab	1-5 mg, 2-4 mg	8 – 12%	70 – 90%
Infliximab	1-10, 5 mg	8 – 12 %	70 – 90%
Etanercept	1-5 mg, 3 mg	8- 12 %	70 – 90%
Natalizumab	1-5 mg, 3 mg	8 – 12 %	70 -90 %
Factor VII	0.03-3 mg; 10-90 µg or 5-30 µg per kg patient weight	0.1- 12 %	1.5 – 50%
Factor VIII	0.03-3 mg; 8-13, 8-10 or 50 to 100 IU, per kg patient weight	0.1- 12 %	1.5 – 50%
Factor IX	0.03-3 mg; 6-12 or 6-9 IU per KG patient weight	0.1- 12 %	1.5 – 50%
Factor X	0.03-3 mg; 1-30 IU per KG patient weight	0.1- 12 %	1.5 – 50%

[0366] Tissue penetrating member 140 can be fabricated using one or more polymer and pharmaceutical fabrication techniques known in the art. For example, drug 101 (with or without biodegradable material

105) can be in solid form and then formed into the shape of the tissue penetrating member 140 using molding, compaction or other like method with one or more binding agents added. The use of 3-D printing and related fabrication methods is also contemplated. Alternatively, drug 101 and/or drug preparation 100 may be in solid or liquid form and then added to the biodegradable material 105 in liquid form with the mixture then formed into the penetrating member 140 using molding or other forming method known in the polymer arts. In some embodiments, the tissue penetrating member may have an outer layer or coating which has a slower rate of degradation in the intestinal wall (or surrounding tissue such the peritoneal cavity) then the inner body of the tissue penetrating so as to slow the rate of drug release into the blood stream. In various embodiments, the outer coating or layer may have a rate of biodegradation that is 10, 25, 50, 100, 200, 500, or 1000% slower than that of the inner core. In use, such embodiments of a slower degrading outer coating of tissue penetrating member 140 allow for a delayed release of the drug 101. Such embodiments provide are particularly useful for situations where it is desirable to maintained therapeutic levels of drug over extended periods for example, for various clotting factors as well as for insulin.

[0367] Desirably, embodiments of the tissue penetrating member 140 comprising a drug or other therapeutic agent 101 and degradable material 105 are formed at temperatures which do not produce any substantial thermal degradation of drug including drugs such as various peptides and proteins including coagulation proteins. This can be achieved through the use of room-temperature curing polymers and room temperature molding and solvent evaporation techniques known in the art. In particular embodiments, the amount of thermally degraded drug or other therapeutic agent within the tissue penetrating member is desirably less than about 10% by weight and more preferably, less than 5% and still more preferably less than 1%. The thermal degradation temperature(s) for a particular drug are either known or can be determined using methods known in the art and then this temperature can be used to select and adjust the particular polymer processing methods (e.g., molding, curing, solvent evaporation methods etc.) to minimize the temperatures and associated level of drug thermal degradation.

[0368] A description will be provided of delivery mechanism 170. Typically, the mechanism will comprise a delivery assembly 178 (containing tissue penetrating members 140) that is attached to delivery balloon 172 as is shown in the embodiment of Figs. 16A and 16B. Inflation of the delivery balloon provides a mechanical force for engaging delivery assembly 172 outwards from the capsule and into the intestinal wall IW so as to insert tissue penetrating members 140 into the wall. In various embodiments, the delivery balloon 172 can have an elongated shape with two relatively flat faces 172f connected by an articulated accordion-like body 172b. The flat faces 172f can be configured to press against the intestinal wall (IW) upon expansion of the balloon 172 so as to insert the tissue penetrating members (TPMs) 140 into the intestinal wall. TPMs 140 (either by themselves or as part of a delivery assembly 178 described below) can be positioned on one or both faces 172f of balloon 172 so as to allow insertion of drug containing TPMs 140 on opposite sides of the intestinal wall IW. The faces 172f of balloon 172 may have sufficient surface area to allow for placement of a number of drug containing TPMs 140 on each face.

Also as described herein, for embodiments of device 10 for delivery of clotting factor CF (e.g., Factor VIII) for the treatment of a clotting all or portion of faces 172f may have a coating 101c of clotting factor or other rapid hemostatic agent so as to apply clotting, factor, by means of pressure, onto the site in the IW where the TPM(s) enters and thus prevent or reduce any hemorrhage at that site.

[0369] Referring now to Fig. 19, a description will now be provided of the assembly of delivery assembly 178. In a first step 300, one or more tissue penetrating members 140 can be detachably coupled to a biodegradable advancement structure 175 which may correspond to a support platform 175 (also known as platform 175). In preferred embodiments, platform 175 includes one or more openings 174 for insertion of tissue penetrating members 140 (also referred to as members 140) as shown in step 300. Openings 174 are sized to allow for insertion and retention of members 140 in platform 175 prior to expansion of balloon 172 while allowing for their detachment from the platform upon their penetration into the intestinal wall. Support platform 175 can then be positioned within a carrying structure 176 as shown in step 301. Carrying structure 176 may correspond to a well structure 176 having side walls 176s and a bottom wall 176b which define a cavity or opening 176c. Platform 175 is desirably attached to inside surface of bottom wall 176b using adhesive or other joining methods known in the art. Well structure 176 can comprise various polymer materials and may be formed using vacuum forming techniques known in the polymer processing arts. In many embodiments, opening 176o can be covered with a protective film 177 as shown in step 302. Protective film 177 has properties selected to function as a barrier to protect tissue penetrating members 140 from humidity and oxidation while still allowing tissue penetrating members 140 to penetrate the film as is described below. Film 177 can comprise various water and/or oxygen impermeable polymers which are desirably configured to be biodegradable in the small intestine and/or to pass inertly through the digestive tract. It may also have a multi-ply construction with particular layers selected for impermeability to a given substance, e.g., oxygen, water vapor etc. In use, embodiments employing protective film 177 serve to increase the shelf life of therapeutic agent 101 in tissue penetrating members 140, and in turn, the shelf life of device 110. Collectively, support platform 175 attached tissue penetrating members 140, well structure 176, and film 177 can comprise a delivery assembly 178. Delivery assemblies 178 having one or more drugs or therapeutic agents 101 contained within tissue penetrating member 40 or other drug delivery means can be pre-manufactured, stored and subsequently used for the manufacture of device 110 at a later date. The shelf life of assembly 178 can be further enhanced by filling cavity 176c of the sealed assembly 178 with an inert gas such as nitrogen.

[0370] Referring now back to Figs. 16A and 16B, assemblies 178 can be positioned on one or both faces 172f of balloon 172. In preferred embodiments, assemblies 178 are positioned on both faces 172f (as shown in Fig. 16A) so as to provide a substantially equal distribution of force to opposite sides of the intestinal wall IW upon expansion of balloon 172. The assemblies 178 may be attached to faces 172f using adhesives or other joining methods known in the polymer arts. Upon expansion of balloon 172, TPMs 140 penetrate through film 177, enter the intestinal wall IW and are retained there by retaining

elements 143 and/or other retaining features of TPM 140 (e.g., an inverse tapered shaft 144t) such that they detach from platform 175 upon deflation of balloon 172.

[0371] In various embodiments, one or more of balloons 130, 160 and 172 can be packed inside capsule 120 in a folded, furled or other desired configuration to conserve space within the interior volume 124v of the capsule. Folding can be done using preformed creases or other folding feature or method known in the medical balloon arts. In particular embodiments, balloon 130, 160 and 172 can be folded in selected orientations to achieve one or more of the following: i) conserve space, ii) produce a desired orientation of a particular inflated balloon; and iii) facilitate a desired sequence of balloon inflations. The embodiments shown in Figs. 15A-15F illustrate an embodiment of a method of folding and various folding arrangements. However, it should be appreciated that this folding arrangement and the resulting balloon orientations are exemplary and others may also be used. In this and related embodiments, folding can be done manually, by automated machine or a combination of both. Also in many embodiments, folding can be facilitated by using a single multi-balloon assembly 7 (herein assembly 7) comprising balloons 130, 160, 170; valve chamber 158 and assorted connecting tubings 162 as is shown in the embodiments of Figs. 13A and 13B. Fig. 13A shows an embodiment of assembly 7 having a single dome construction for balloon 130, while Fig. 13B shows the embodiment of assembly 7 having dual balloon/dome configuration for balloon 130. Assembly 7 can be fabricated using a thin polymer film which is vacuum-formed into the desired shape using various vacuum forming and other related methods known in the polymer processing arts. Suitable polymer films include polyethylene films having a thickness in the range of about 0.003 to about 0.010", with a specific embodiment of 0.005". In preferred embodiments, the assembly is fabricated to have a unitary construction so as to eliminate the need for joining one or more components of the assembly (e.g., balloons 130,160, etc.). However, it is also contemplated for assembly 7 to be fabricated from multiple portions (e.g., halves), or components (e.g., balloons) which are then joined using various joining methods known in the polymer/medical device arts.

[0372] Referring now to Figs. 15A-15F, 16A-16B and 17A-17B, in a first folding step 210, balloon 160 is folded over onto valve fitting 158 with balloon 172 being flipped over to the opposite side of valve fitting 158 in the process (see Fig. 15A). Then in step 211, balloon 172 is folded at a right angle to the folded combination of balloon 160 and valve 158 (see Fig. 15B). Then, in step 212 for dual dome embodiments of balloon 130, the two halves 130' and 130" of balloon 130 are folded onto each other, leaving valve 150 exposed (see Fig. 15C, for single dome embodiments of balloon 130, is folded over onto itself see Fig. 15E). A final folding step 213 can be done whereby folded balloon 130 is folded over 180° to the opposite side of valve fitting 158 and balloon 160 to yield a final folded assembly 8 for dual dome configurations shown in the Fig. 15E and a final folded assembly 8' for single dome configurations shown in Figs. 15E and 15F. One or more delivery assemblies 178 are then attached to assembly 8 in step 214 (typically two the faces 72f of balloon 72) to yield a final assembly 9 (shown in the embodiments of Figs. 16A and 16B) which is then inserted into capsule 120. After an insertion step 215, the final assembled version of device 110 with inserted assembly 9 is shown Figs. 17A and 17B.

[0373] Referring now to Figs. 20A-20I, a description will be provided of a method of using device 110 to deliver medication 101 such as clotting factor (e.g., Factor VIII) or other coagulation protein to a site in the GI tract such as the wall of the small or large intestine, the peritoneum or the peritoneal cavity. It should be appreciated that the steps and their order is exemplary and other steps and orders also contemplated. After device 110 enters the small intestine SI, the cap coating 120c' is degraded by the basic pH in the upper small intestine causing degradation of cap 120p'as shown in step 400 in Fig. 20B. Valve 150 is then exposed to fluids in the small intestine causing the valve to begin degrade as is shown in step 401 in Fig. 20C. Then, in step 402, balloon 130 expands (due to generation of gas 169) as shown in Fig. 20D. Then, in step 403, section 160' of balloon 160 begins to expand to start to push assembly 178 out of the capsule body as shown in Fig. 20E. Then, in step 404, sections 160' and 160" of balloon 160 become fully inflated to completely push assembly 178 out of the capsule body extending the capsule length 120l so as to serve to align capsule lateral axis 120AL with the lateral axis of the small intestine LAI as shown in Fig. 20F. During this time, valve 155 is beginning to fail from the increased pressure in balloon 60 (due to the fact that the balloon has fully inflated and there is no other place for gas 169 to go). Then, in step 405, valve 155 has completely opened, inflating balloon 172 which then pushes the now completely exposed assembly 178 (having been pushed completely out of body 120p") radially outward into the intestinal wall IW as shown in Fig. 20G. Then, in step 406, balloon 172 continues to expand to now advance tissue penetrating members into the intestinal wall IW as shown in Fig. 20H. Then, in step 407, balloon 172, (along with balloons 160 and 130) has deflated pulling back and leaving tissue penetrating members retained in the intestinal wall IW. Also, the body portion 120p"of the capsule has completely degraded (due to degradation of coating 120c") along with other biodegradable portions of device 110. Any portion not degraded is carried distally through the small intestine by peristaltic contraction from digestion and is ultimately excreted.

[0374] Referring now to Figs 21-23, in various embodiments, the therapeutic preparation and associated methods for their delivery into the wall of the small intestine or surrounding tissue can be configured to produce plasma/blood concentration vs time profiles 200 of the therapeutic agent having a selected shape 203 with C_{max} 205 or T_{max} 206 or other pharmacokinetic value as reference points 207. For example, as illustrated in Fig. 21, the plasma concentration vs time profile 200 of a given drug may have a rising portion 210 and a falling portion 220 with a selected ratio of the time lengths of the rising portion 210 to the falling portion 220. In specific embodiments this is the ratio of the time 208 it takes to go from a pre-delivery concentration 204 of therapeutic agent to a C_{max} level 205 (this time corresponding to T_{max} time 206), during the rising portion (also described as rise time 208), to the time 209 (also described as fall time 209) it takes during the falling portion 210 to go from the C_{max} level 205 back to the pre-delivery concentration 204. In various embodiments, the ratio of the rise time 208 to the fall time 209 can be in the range of about 1 to 20, 1 to 10 and 1 to 5. In specific embodiments of therapeutic preparations comprising a PEGylated form of Factor VIII, the ratio of rise time to fall time in profile 200 can be about 1 to 11 (see Fig. 22 showing the T_{max} being 10.4 hours and the last point on the falling portion of the curve (assumed

to be near but above a zero level of FVIII) occurring at 60 hours, and see Fig. 23 showing the T_{max} being 7.2 hours and the last point on the falling portion of the curve occurring at 84 hours). Still other ratios are contemplated. For embodiments of therapeutic preparations comprising clotting factors preparations with shorter half-lives, such as ADVATE or other un-complexed/unconjugated form of Factor VIII or other clotting factors, the ratio of rise time to fall time will be expected to be less as therapeutic agent will be broken down or otherwise cleared from the body faster.

[0375] Appendices/Examples

[0376] Various embodiments of the invention are further illustrated with reference to the following examples and appendices. It should be appreciated that these examples and appendices are presented for purposes of illustration only and that the invention is not to be limited to the information or the details therein.

[0377] Example 1: In Vivo Modelling of the Delivery of Factor VIII in Humans using Embodiments of a Swallowable Device Described Herein

[0378] Pharmacokinetic models were developed to determine human plasma concentration of Factor VIII vs time curves (also described as plasma-time curves or plasma concentration profiles) and various pharmacokinetic parameters including without limitation T_{max}, T½, Area Under the curve (AUC) and absolute bioavailability (F, expressed as percent) for the intrajejunal delivery of PEGylated FVIII and ESPEROCT using embodiments of the swallowable device described herein. The model assumed a delivered dose of 100IU/kg body weight for each drug. The numerical results are shown in Table 6 and Table 7 for PEGylated FVIII generally (e.g., ADYNOVATE) and specifically for ESPEROCT, respectively. Except for bioavailability, the ranges for each parameter are assumed to ± 25% of the nominal value with a narrower range of ± 10. The plasma concentration-time curves are shown in Figs 22 and 23 for PEGylated FVIII and ESPEROCT specifically, respectively. The ± 25% ranges shown for each curve are in dotted line format.

TABLE 6

Pharmacokinetic Parameters for PEGylated FVIII

Pharmacokinetic Parameter	Predicted Value
AUC, (IU*h)/mL	6.06
T_{max}, hours	10.4
C_{max} (IU/mL)	0.32
T½, hours	15
Bioavailability, F (%)	20
Bioavailability Range (%)	11 - 39

TABLE 7

Pharmacokinetic Parameters for ESPEROCT

Pharmacokinetic Parameter	Predicted Value
AUC, (IU*h)/mL	16.06
T_{max}, hours	7.2
C_{max} (IU/mL)	0.57
T½, hours	21.7
Bioavailability, F (%)	30%
Bioavailability Range (%)	17 – 60%

[0379] Example 2: In Vivo Canine Study of the Delivery of PEGylated FVIII

[0380] Objective: The objective of study was to demonstrate peritoneal delivery of Factor VIII molecules in awake hemophiliac dogs and to assess the bioavailability of delivery in the peritoneum, as a proof of concept study for delivering the Factor VIII into the peritoneal cavity via embodiments and/or variations of a swallowable capsule described herein. PEGylated FVIII was used as representative for the class of Factor VIII molecules.

[0381] Materials and Methods

[0382] A Hemophilia A dog (Irish Setter) was administered PEGylated FVIII both intravenously (IV) and intraperitoneally (IP). The study was divided into three parts (part 1, part 2, part 3) which varied by dosage, time of delivery (day), and type of delivery (IP vs IV). Dosage is expressed in terms of IU/kg with respect to this example, with the understanding that kg refers to kg of body weight.

[0383] In part 1, the dog received 300 IU/kg on day 0 by IP route (the IP first dose); in part 2, the dog received 30 IU/kg on day 5 by IV route (the IV second dose); in part 3, the dog received 150 IU/kg on day 10 by IP route (the IP third dose). These dosages, times, and modes of delivery were chosen to see what the pharmacokinetics would be for the IP route before any inhibitor antibodies developed and to see if dose response data could be derived. Various tests were used to assess the pharmacokinetics (PK), pharmacodynamics (PD), and immunogenicity of each route of delivery, including determination of specific parameters for each (e.g., T_{max}, C_{max}, AUC, etc.). The tests used are summarized below in Table 8.

TABLE 8

Pharmacokinetics	FVIII Activity Assay	Measures FVIII activity levels
	FVIII Antigen Assay	Quantifies amount of FVIII present in plasma by ELISA
Pharmacodynamics	Whole Blood Clotting Time (WBCT)	Determines coagulation time of whole blood
	Thromboelastography (TEG)	Quantitatively measures the ability of whole blood to clot
	Activated Partial Thromboplastin Time (aPTT)	Evaluates the integrity of intrinsic coagulation pathway
Immunogenicity	FVIII Inhibitor Antibody Assay	Detects/quantifies known antibodies to FVIII

Results

[0384] Plasma PEGylated FVIII concentration levels (derived from an antibody-antigen ELISA for Factor VIII) and/or activity levels (e.g., the bioactivity of Factor VIII) in the three parts were plotted against time and are shown in Figs. 25A, 25B, 26A-C, 27A, and 27B.

[0385] Fig. 25A is a plot of FVIII activity vs time for the three parts. Fig. 25B is an enlarged view of the circled area in Fig. 25A. Figs. 26A-26C are plots of PEGylated FVIII concentration compared to PEGylated FVIII activity for the three parts. Fig. 27A is a plot of FVIII concentration. Fig. 27B is an enlarged view of the circled area in Fig. 27A. Based on these plots and further analysis of the data a list of resulting pharmacokinetic parameters is shown below in Table 9.

TABLE 9

Group, Treatment (Dose)	**C_{max} (IU/ml)**	**T_{max}**	**AUC (IU/ml.h)**	**Clotting Factor Activity Duration (Estimated Hours)**
Part 1 IP (300 IU/kg) (IP first dose)	3.2	8 h	64	>72
Part 2 IV (30 IU/kg) (IV second dose)	0.87	5 min	3	16
Part 3 IP (150 IU/kg) (IP third dose)	0.23	6 h	4	24

[0386] Fig. 28A is a plot of whole blood clotting vs time for IP delivery of PEGylated FVIII at dosages of 150 IU/kg body weight (also referred to herein as IU/kg with it being understood that the units are with respect to body weight) and 300 IU/kg compared with IV route of delivery at a dosage of 30 IU/kg. Also shown are the levels of clotting times considered to provide for normal clotting and to provide for protection from spontaneous bleeds. Fig. 28B is an enlarged view of the circled area in Fig. 28A. The plots illustrate that IP delivery at both dosages of PEGylated FVIII provided for periods of normalized coagulopathy (clotting) for periods up 36 hours that were far longer than those achieved by the IV dosage.

[0387] Fig. 29 is a plot of aPTT (activated partial thromboplastin time) vs time for IP delivery of PEGylated FVIII at dosages of 150 IU/kg and 300 IU/kg and for an IV route of delivery at a dosage of 30 IU//kg. Also shown are the aPTT for normal canine plasma and Factor VIII deficient plasma. The plots illustrate that IP delivery was able to produce a coagulation effect for more than 72 hours. In contrast, the IV dose only produced a transient coagulation effect.

[0388] As evident from the plots in the figures, the IP first dose of PEGylated FVIII yielded a robust PK curve consistent with the PD response. There were sustained levels of PEGylated FVIII activity for up to 72 hours.

[0389] Hemophilia A canines exposed to human FVIII can rapidly develop inhibitors (anti-FVIII antibodies) to FVIII, which can also neutralize canine FVIII. The data in the plots and figures indicate that a presence of inhibitors decreasing the activity of the PEGylated FVIII was unlikely with respect to the IP first dose. For the IV second dose delivered at day 5 with 1/10th of the IP first dose (30 IU/kg in the IV second dose versus 300 IU/kg IP in the IP first dose), less than 1/20th of the FVIII activity occurred as compared to the IP first dose. Immunogenicity data indicated that inhibitors developed after day 5, and within a few days passed an inhibitory level greater than one Bethesda unit (1 BU, representing the amount of inhibition that will neutralize 50% of FVIII activity in normal plasma). The decrease in FVIII activity for the IV second dose was likely due at least in part to the inhibitors. The IP third dose delivered on day ten (150 IU/kg IP), which was one-half of the IP first dose (300 IU/kg), resulted in 1/20th FVIII levels as compared to the IP first dose, affected by inhibition which was greater than 1 BU (indicating greater than 50% inhibition) by the tenth day.

[0390] Figs 30A-30C are PD-PK plots of aPTT (a PD assessment) and PEGylated FVIII activity (a PK assessment) at IP dosages of 300 IU/kg and 150 IU/kg and for an IV route of delivery at dosage of 30 IU/kg. The plots illustrate that there was excellent correlation of the pharmacodynamic and pharmacokinetic effects of intraperitoneal delivery of PEGylated FVIII.

[0391] The data in both Fig. 28A and Table 10 below demonstrate that IP dosages of both 150 IU/kg and 300 IU/kg of PEGylated FVIII have normalized coagulopathy for sustained periods, and that the 300 IU/kg dosage sustained coagulopathy for a duration more than twice that of the IV dosage of 30 IU/kg.

TABLE 10

Treatment (Dose)	Estimated Duration of Normalization (Hours)
IV (30 IU/kg) (IV second dose)	16
IP (150 IU/kg) (IP third dose)	24
IP (300 IU/kg) (IP first dose)	36

[0392] *Conclusions*: The results of the study showed comparable or improved results for delivery of PEGylated Factor VIII via IP delivery as compared to the IV delivery. In particular, the IP route of delivery was shown to lower coagulation times for a longer duration than IV route. Also, FVIII activity and concentration levels in plasma were shown to have similar trends. Further, IP delivery of PEGylated FVIII was shown to have a sustained activity, with Factor VIII Activity being detected in plasma for up to 72 hours in addition to being highly effective in normalizing the Hemophilia A coagulopathy, with concomitant coagulopathy being normalized for up to 36 hours (based on a clotting test done at 36 hours; however, the clotting test was not conducted at 48 hours or 72 hours, while appreciable FVIII was still detectable in the plasma for up to 72 hours). The estimated bioavailability for the IP delivery of PEGylated FVIII was high (33-100%), based on detailed PK-PD analyses and there was excellent PK (pharmacokinetic)-PD (pharmacodynamics) correlations, based on tracking 2 PK and 3 PD parameters, as well as taking into consideration the inhibitors which reduced FVIII levels by about 50% (1 Bethesda Unit) or more (as shown in Fig. 31 from Day 7 onwards). Thus, detected FVIII levels were likely reduced after delivery of the first dose due to development of anti-drug antibodies.

[0393] Based on the results of this study, it is expected that molecules generally delivered parenterally can be successfully delivered intraperitoneally with good bioavailability (e.g., molecules up to at least the size of PEGylated FVIII).

[0394] Appendix 1 Modeling of Alirocumab Serum Concentration vs Time

[0395] The following assumptions and/or data were used in modelling Alirocumab Serum Concentrations vs Time delivered by embodiments of the swallowable capsule vs conventional subcutaneous injection or other injection method:

[0396] The subcutaneous dosing schedule is 150 mg every week, SC (subcutaneous), every two weeks, this corresponds to a daily dosing schedule of approximately 21.4 mg per day using embodiments of the invention.

[0397] Monoclonal antibodies was obtained from Regeneron/Sanofi. It targets pro-protein convertase subtilisin/kexin type 9 (PCSK9) to lower low-density lipoproteins (LDLs).

[0398] Pharmacokinetic parameters were obtained from the paper by Lunven, C., Paehler, T., Poitiers, F., *et al*. entitled "A randomized study of the relative pharmacokinetics, pharmacodynamics, and safety of Alirocumab, a fully human monoclonal antibody to PCSK9, after single subcutaneous administration at three different injection sites in healthy subjects." *Cardiovascular Therapeutics*, 2014, 32:297.301.

[0399] No ka was reported, but 0.5 day^{-1} was chosen so that T_{max} was 4.3 days.

[0400] The study reported PK parameters for three different sites of injection and found that all three were comparable. For this single simulation, the parameters used were averages of the three.

[0401] When steady state is reached for simulated daily dosing using embodiments of the invention, drug concentrations ranged from 10.06 mg/L to 20.05 mg/L, resulting in an average of 15.06 mg/L.

[0402] When using embodiments of the invention, daily dosing at doses of approximately 10.5 mg which corresponded approximately to the 150 mg biweekly dose given my conventional injection means (e.g., subcutaneous, intramuscular, etc.). The pharmacokinetic profile for biweekly dossing using convention injection means is shown in Fig. 24A. By comparison, the pharmacokinetic profile for daily dosing using embodiments of the swallowable capsule is shown in Figure 24B. As can be seen from the two pharmacokinetic profiles the daily dosing resulted in greatly reduced daily perturbation in the concentration of drug both during the rise to the desired target steady state level and once the steady state level was achieved. In particular once steady state is reached, concentrations of Alirocumab ranged from 15.41 mg/L to 15.47 mg/L, with an average steady state concentration of 15.44 mg/L which was above the 15.06 value for subcutaneous injections every two weeks. This lower day to day variation in drug concentrations may prevent adverse events and anti-drug antibody formation, and the higher trough concentrations ensure that biological activity of Alirocumab is maintained.

[0403] Appendix 2: Model and Calculations Used For Calculation Of Steady State Fluctuation In Alirocumab Serum Concentrations.

[0404] Percent Steady State Fluctuation is a metric which provides an indication of how much variation there is in the patient's plasma/serum concentration of a drug(s) over time. It is desirable to minimize steady state fluctuation for multiple reasons. Firstly, drug concentrations that are higher than necessary for pharmacologic activity are more likely to result in adverse events. For the cause of Factor VIII or other clotting factor, such adverse event include the development of anti-drug antibody production which inhibit or otherwise lessen biochemical effect of the clotting fact. A patient who develops anti-drug antibodies to a drug will no longer respond to that drug and must be placed on a different regimen. On the other hand, drug concentrations that are lower than necessary for pharmacologic activity are also not desired. There is a greater chance of no pharmacologic activity during these periods, and thus lower drug efficacy. It is ideal to maintain a constant, steady level of pharmacologic activity in order to effectively treat the targeted disorder.

TABLE 11

% Steady State Fluctuation for Alirocumab

	Alirocumab
Current SC dosing	66.33%
Intestinal wall dosing	0.39%

[0405] Calculations were made for % Steady State Fluctuation for the antibodies shown in Table 11. Values were determined using the existing pharmacokinetic simulations described in Appendix 1. The specific formula used to calculate % Steady State Fluctuation is shown below:

$$\frac{C_{ss,\,peak} - C_{ss,trough}}{C_{ss,avg}} * 100 = \%\ steady\ state\ fluctuation$$

[0406] The above equation calculates the difference between peak steady state concentration ($C_{ss,peak}$) and trough steady state concentration ($C_{ss,trough}$) and divides by the average steady state concentration ($C_{ss,avg}$) to yield the percent change of serum drug concentrations relative to the average steady state drug concentration. Steady state fluctuation serves as a quantitative measure of how much we can expect serum drug concentrations to change in single dosing period.

[0407] From the data, it is evident that daily dosing using embodiments of the invention allows much lower steady state fluctuation for the same drugs than subcutaneous dosing. In addition to the expected benefits of less frequent, less intense adverse events and maintenance of pharmacologic activity, dosing via injection into the small intestine using embodiments of the invention avoids the injection site reactions that may occur in subcutaneous dosing.

Conclusion

[0408] The foregoing descriptions of various embodiments of the invention have been presented for purposes of illustration and description. It is not intended to limit the invention to the precise forms disclosed. Many modifications, variations and refinements will be apparent to practitioners skilled in the art. For example, embodiments of the device and therapeutic preparations (e.g., in the form of a tissue penetrating member) can be sized and otherwise adapted (e.g., dosage adjusted for therapeutic preparations) for various pediatric and neonatal applications as well as various veterinary applications. Also, those skilled in the art will recognize, or be able to ascertain using no more than routine experimentation, numerous equivalents to the specific devices and methods described herein. For example, for the case of clotting factors, such as Factor VIII and PEGylated Factor VIII, bioequivalents to the disclosed clotting factors including analogues and derivatives are specifically contemplated. Such equivalents are considered to be within the scope of the present invention and are covered by the appended claims below.

[0409] Elements, characteristics, or acts from one embodiment can be readily recombined or substituted with one or more elements, characteristics or acts from other embodiments to form numerous additional embodiments within the scope of the invention. Moreover, elements that are shown or described as being combined with other elements, can, in various embodiments, exist as standalone elements. Further still, embodiments of the invention also contemplate the exclusion or negative recitation of an element, feature, chemical, therapeutic agent, characteristic, value or step wherever said element, feature, chemical, therapeutic agent, characteristic, value, step or the like is positively recited. Hence, the scope of the present invention is not limited to the specifics of the described embodiments, but is instead limited solely by the appended claims.

CLAIMS

WHAT IS CLAIMED IS:

1. A therapeutic preparation for treatment of a clotting disorder in a patient, the therapeutic preparation comprising a stabilized form of Factor VIII (FVIII) at a dosage above 75 IU/kg body weight of the patient and configured for insertion through the patient's intestinal wall into the patient's peritoneal cavity, wherein the therapeutic preparation releases the FVIII into the blood stream.

2. The therapeutic preparation of claim 1, wherein the stabilized Factor VIII comprises PEGylated factor VIII.

3. The therapeutic preparation of claim 2, wherein the PEGylated factor VIII is present in the therapeutic preparation in a range from 75 IU/kg body weight to 400 IU/kg body weight.

4. The therapeutic preparation of claim 2, wherein the PEGylated factor VIII is present in the therapeutic preparation in a range from 150 IU/kg body weight to 300 IU/kg body weight.

5. The therapeutic preparation of claim 1, wherein the therapeutic preparation is included in a solid tissue penetrating member configured to penetrate an intestinal wall by an application of force on the tissue penetrating member.

6. The therapeutic preparation of any one of claims 1 to 5, having a T_{max} in a range from 6 to 10 hours.

7. The therapeutic preparation of any one of claims 1 to 6, having a C_{max} in a range from about 2.4 IU/ml to 4.0 IU/ml.

8. The therapeutic preparation of any one of claims 1 to 7, having an area under the curve (AUC) in a range from 60 (IU*h)/mL to 70 (IU*h)/mL.

9. The therapeutic preparation of any one of claims 1 to 8, having a ratio of a rising curve portion to a falling curve portion in a range from 1:4 to 1:8.

10. The therapeutic preparation of claim 1, wherein the stabilized FVIII comprises FVIII chemically complexed with Von Willebrand factor.

11. The therapeutic preparation of claim 1, wherein the stabilized FVIII comprises FVII modified by Fc-fusion.

12. A method for treating a clotting disorder in a patient, the method comprising: providing stabilized Factor VIII (FVIII) in a dosage above 75 IU/kg body weight; and delivering the FVIII through the patient's intestinal wall and into the patient's peritoneal cavity; wherein the FVIII is released into the blood stream to treat the clotting disorder.

13. A method as in claim 12, wherein the stabilized Factor VIII is provided as a solid tissue penetrating member, and wherein delivering the stabilized Factor VIII through the patient's intestinal wall comprises causing the solid tissue penetrating member to penetrate through the patient's intestinal wall by the application of force on the tissue penetrating member such that the tissue penetrating member is delivered from a device after oral ingestion of the device.

14. A method as in claim 12, wherein the release of the FVIII into the blood stream produces a plasma concentration-time curve characterized by at least one pharmacokinetic parameter selected from the group consisting of $T½$, T_{max}, C_{max}, area under the curve (AUC), bioavailability, or a ratio of a rising curve portion to falling curve portion.

15. The method of claim 13 or 14, wherein the stabilized Factor VIII comprises PEGylated factor VIII.

16. The preparation of claim 15, wherein the PEGylated factor VIII is present in a therapeutic preparation in a range from 75 IU/kg body weight to 400 IU/kg body weight.

17. The preparation of claim 15, wherein the PEGylated factor VIII is present in a therapeutic preparation in a range from150 IU/kg body weight to 300 IU/kg body weight.

18. The method of claims 15, wherein the T_{max} is in a range from 6 to 10 hours.

19. The method of claim 15 or 18, wherein the C_{max} is in a range from about 2.4 IU/ml to 4.0 IU/ml.

20. The method of claim 15, 18, or 19, wherein the area under the curve (AUC) is in a range from 60 (IU*h)/mL to 70 (IU*h)/mL.

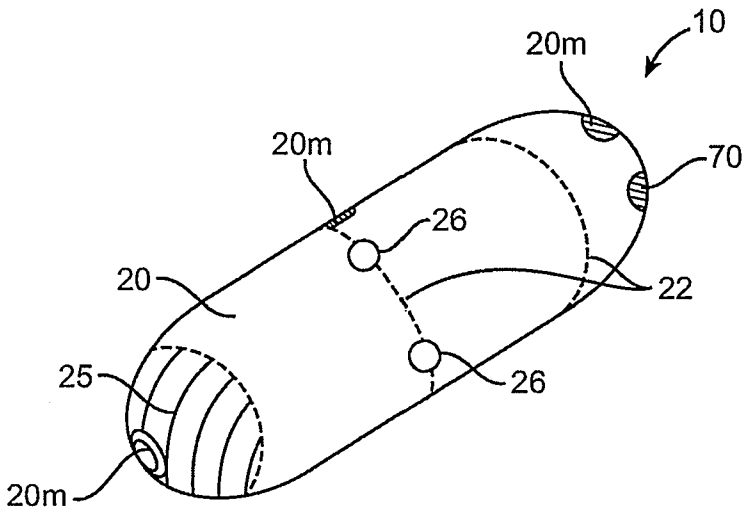

FIG. 1a

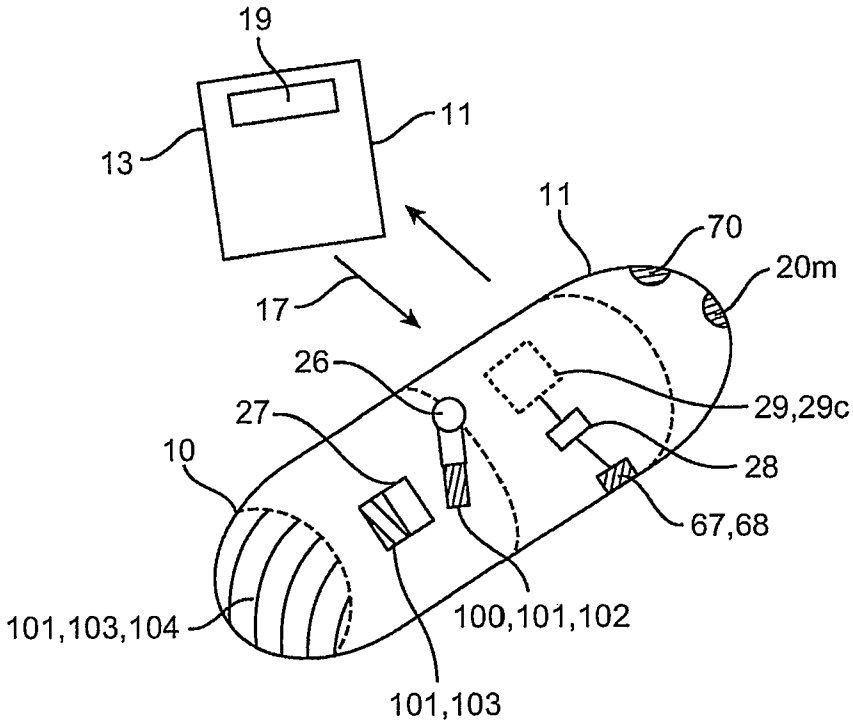
19
11
13
11
70
20m
17
26
29,29c
27
28
10
67,68
101,103,104
100,101,102
101,103

FIG. 1b

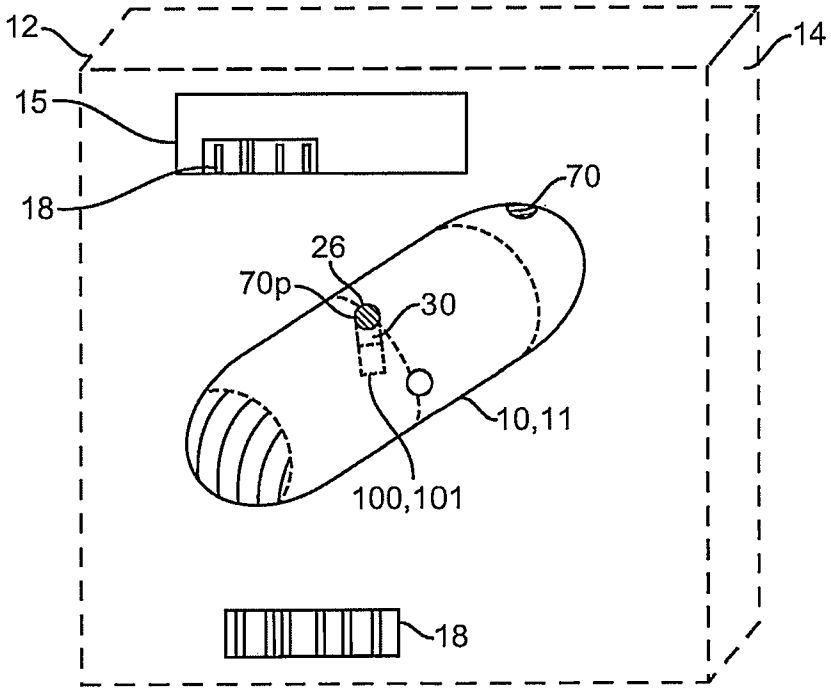

FIG. 1c

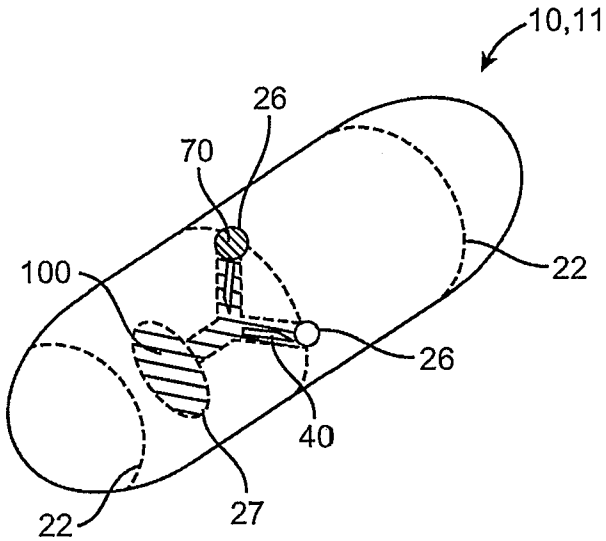

FIG. 1d

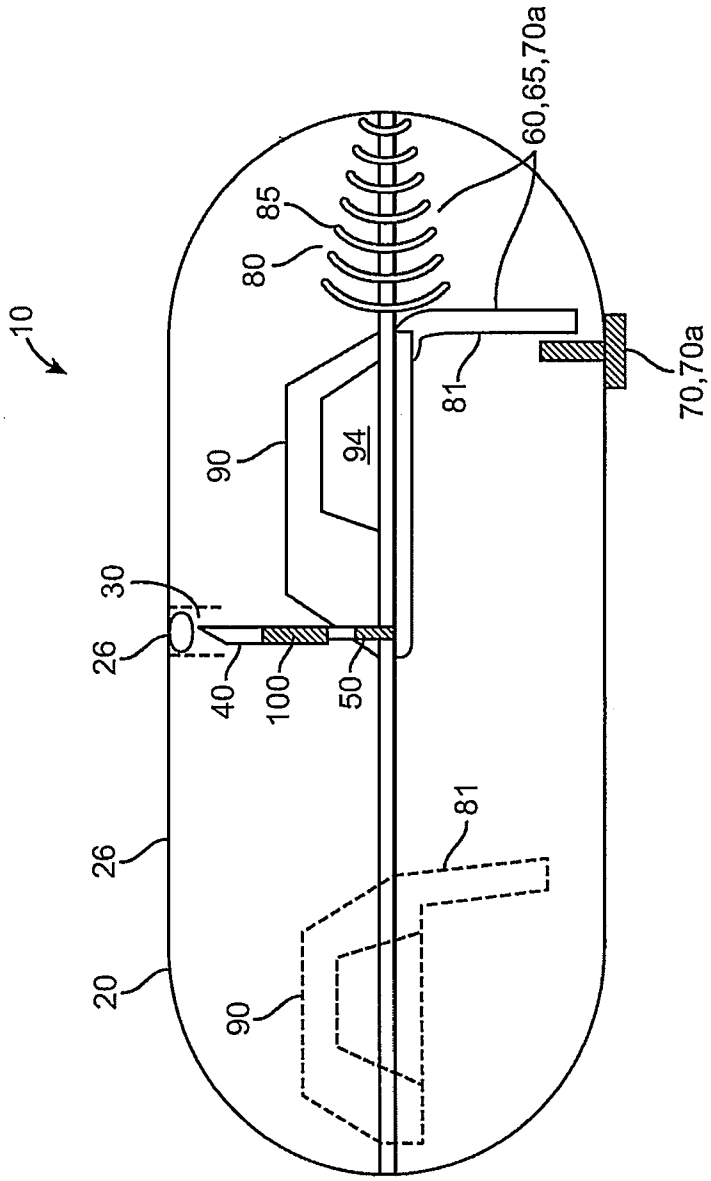

FIG. 2

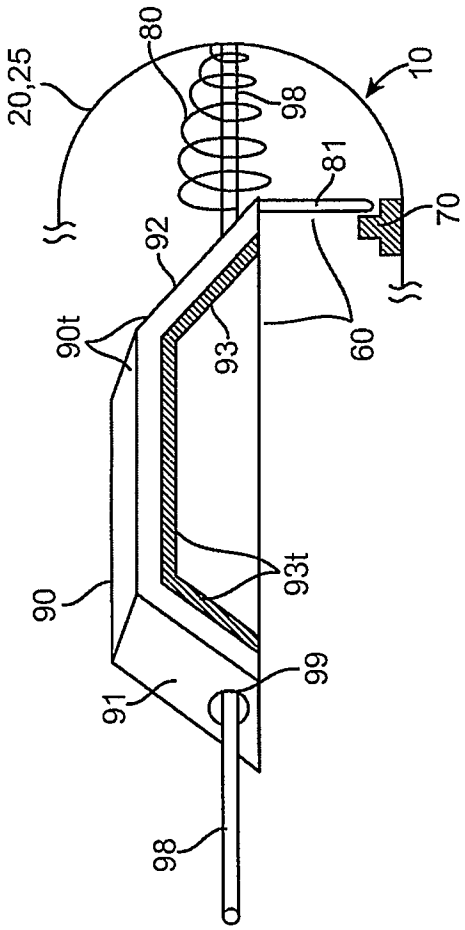

FIG. 3

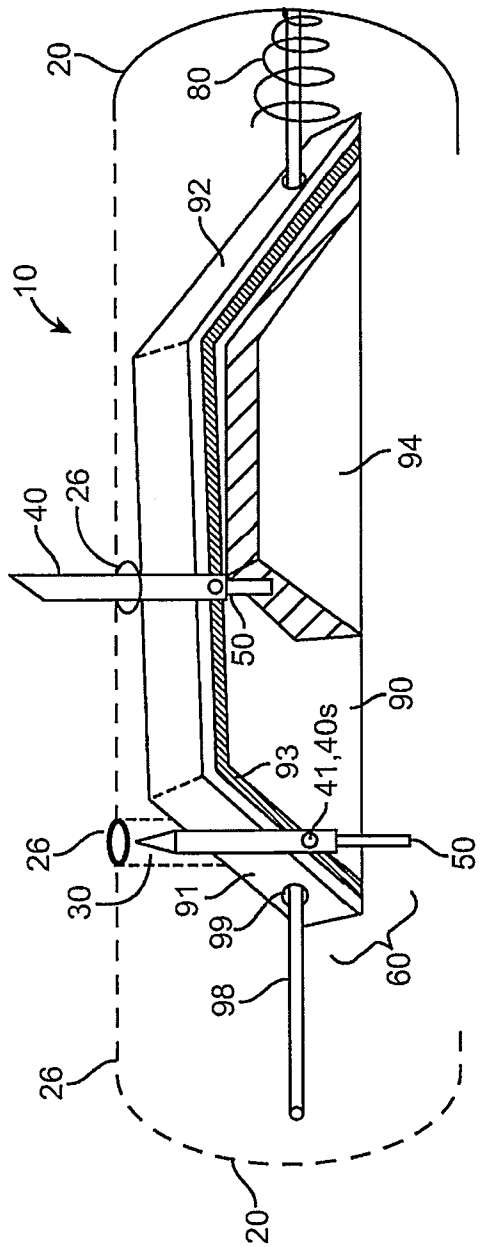

FIG. 4

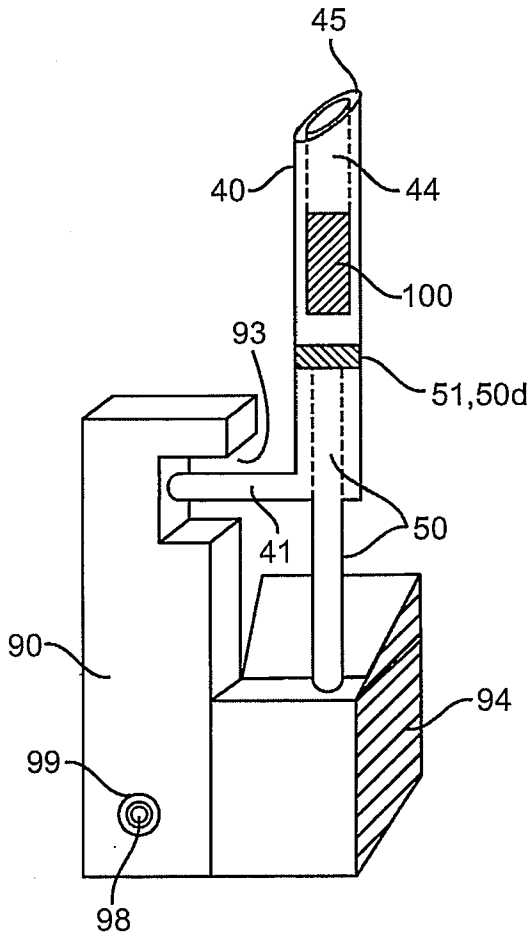

FIG. 5

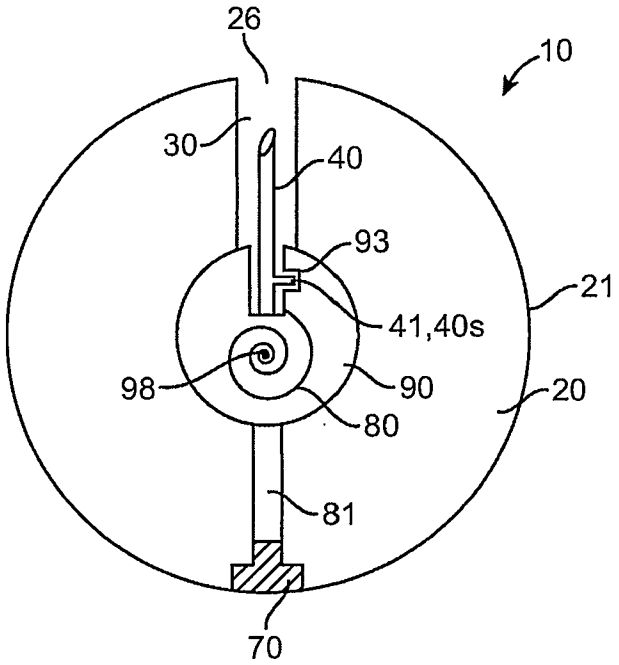

FIG. 6

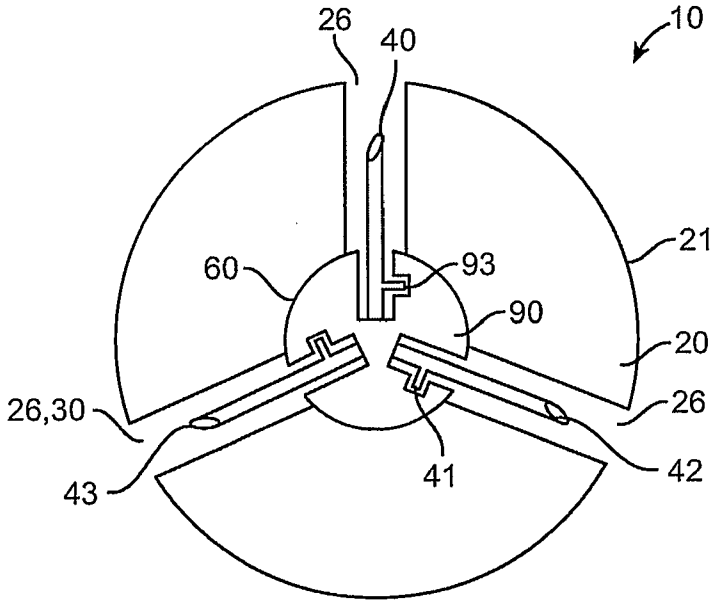

FIG. 7a

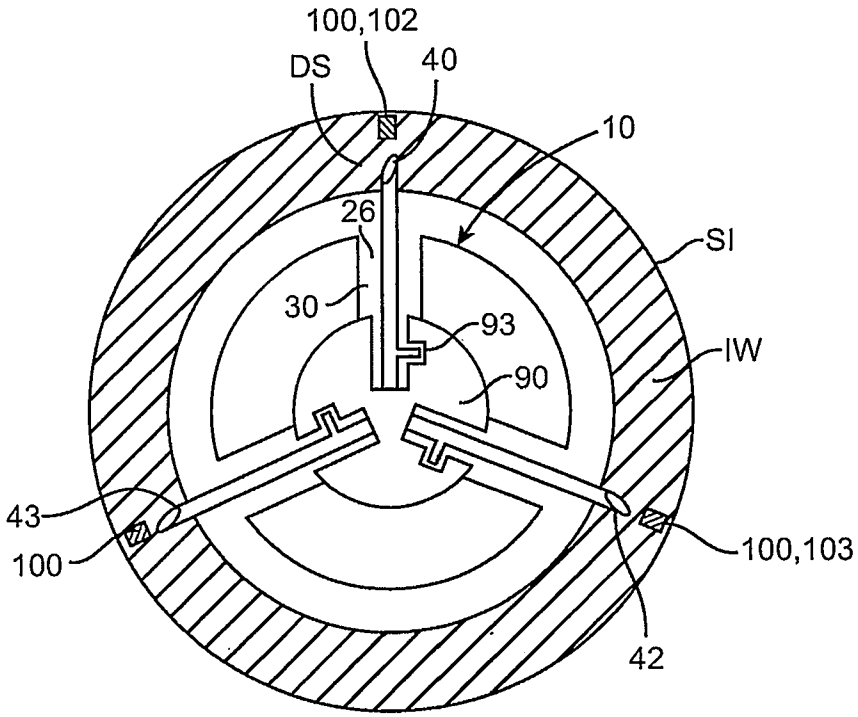

FIG. 7b

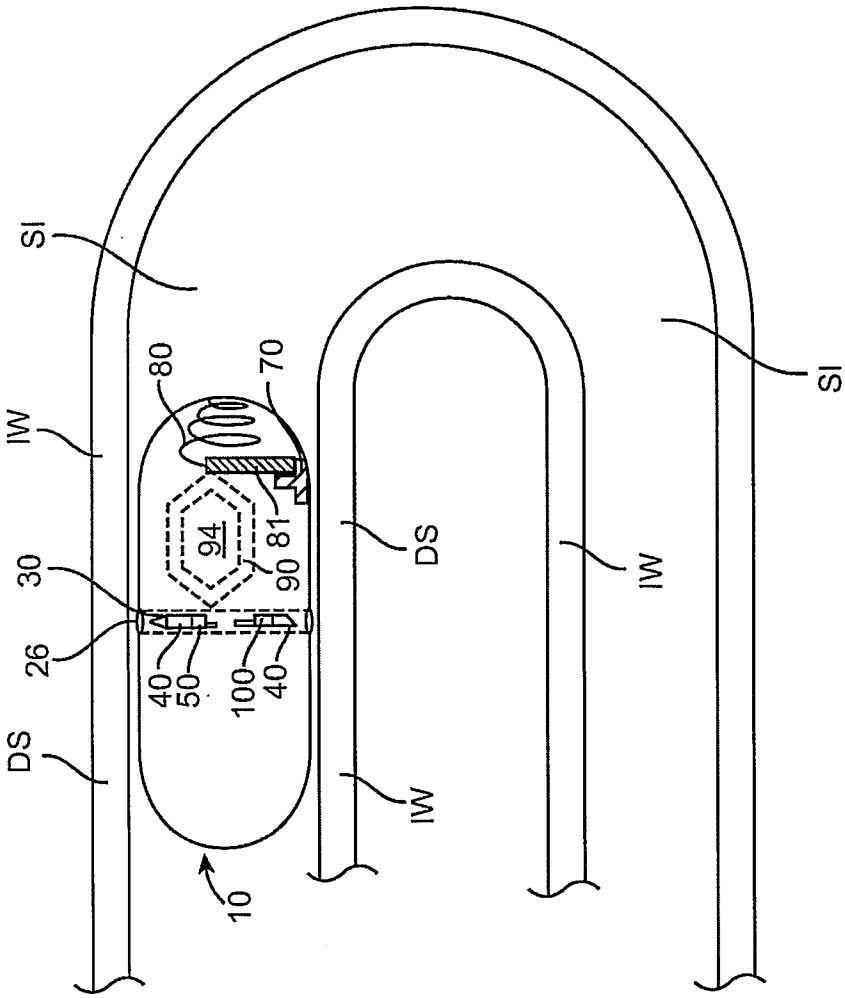

FIG. 8a

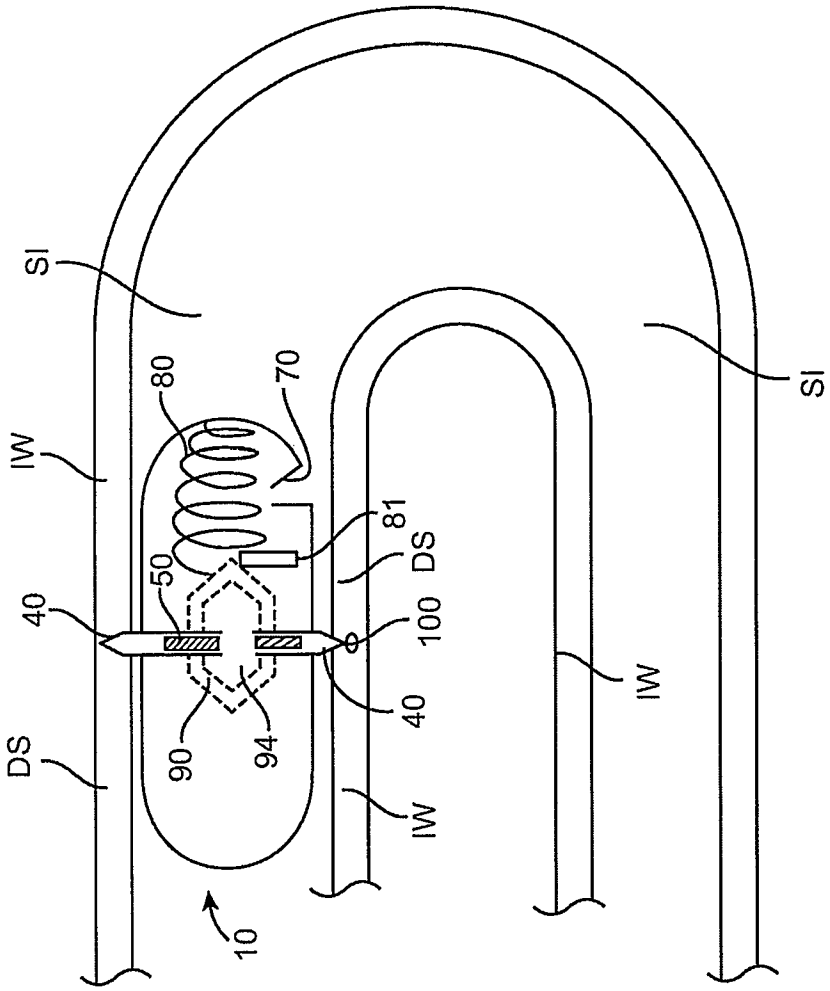

FIG. 8b

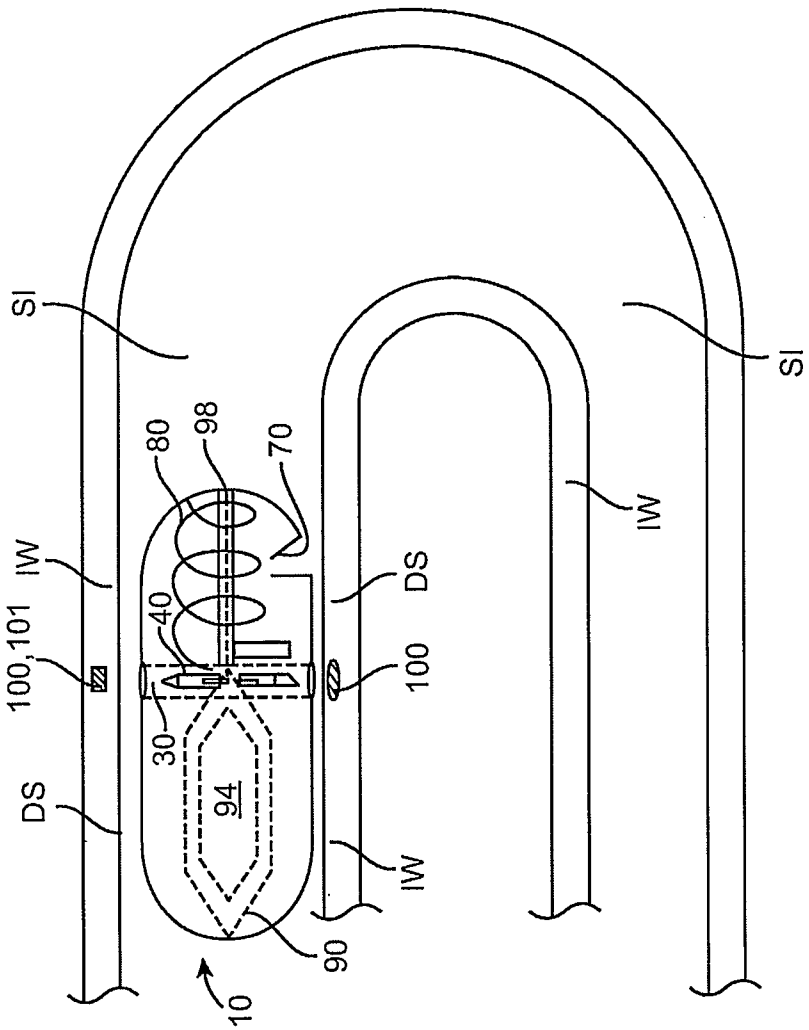

FIG. 8c

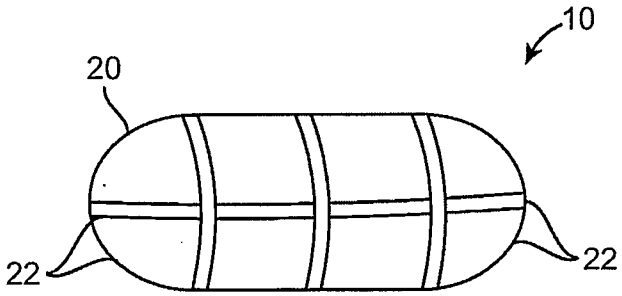

FIG. 9a

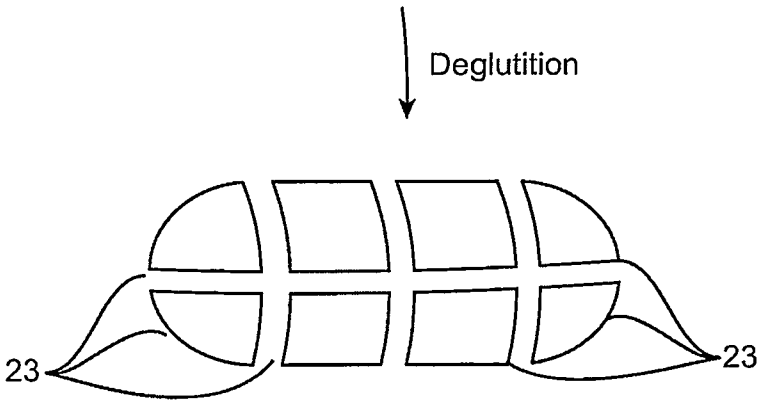

FIG. 9b

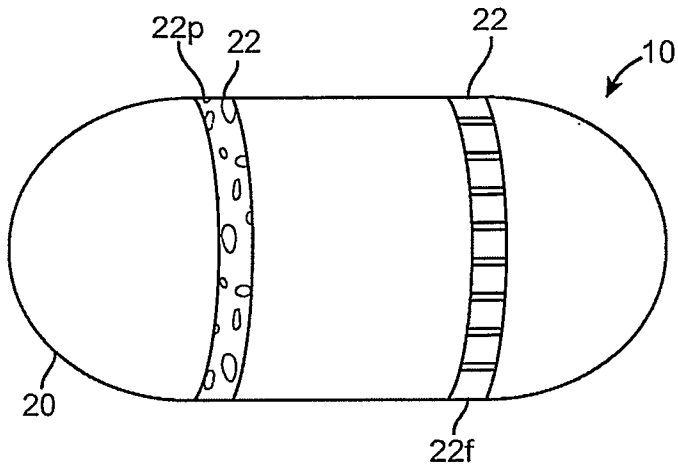

FIG. 10

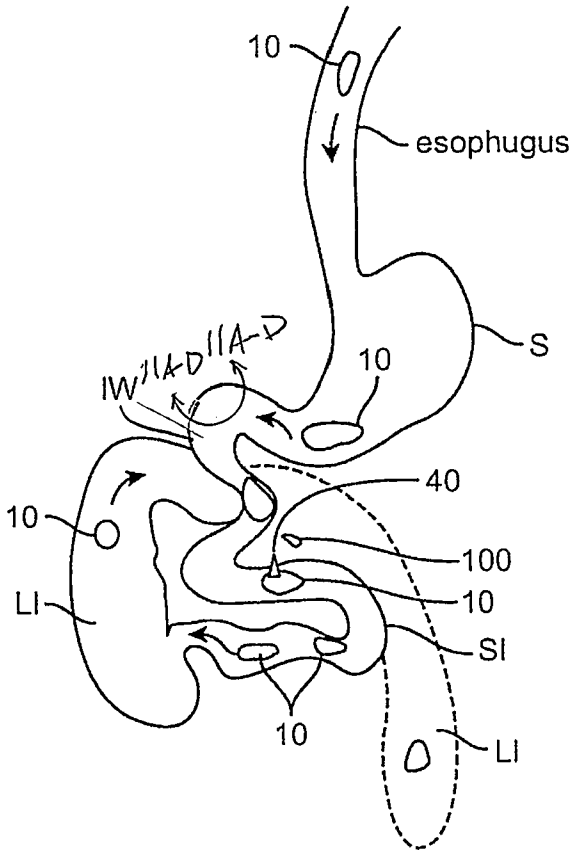

FIG. 11

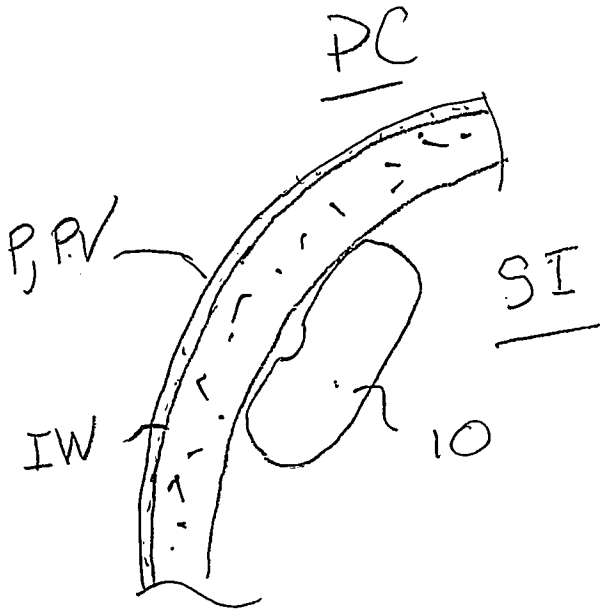

FIG-11A

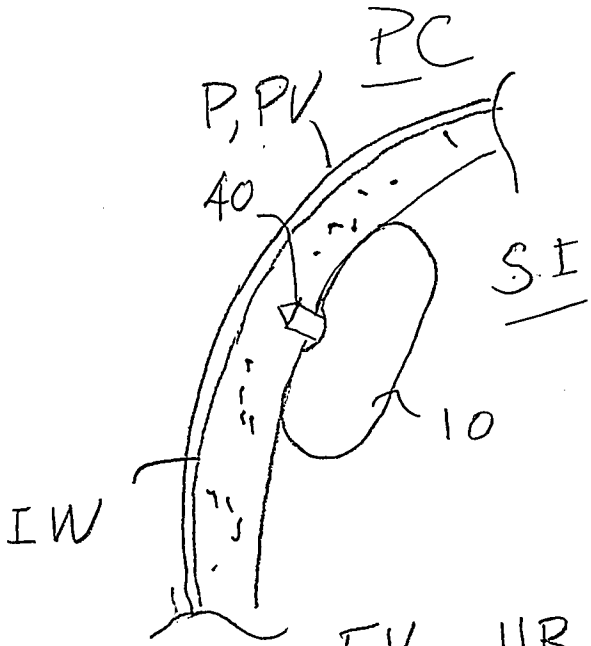

FIG-11B

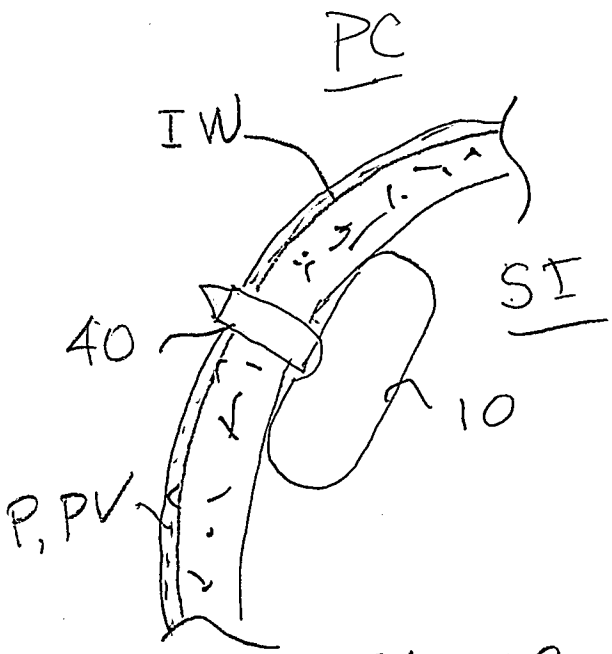

FIG-11C

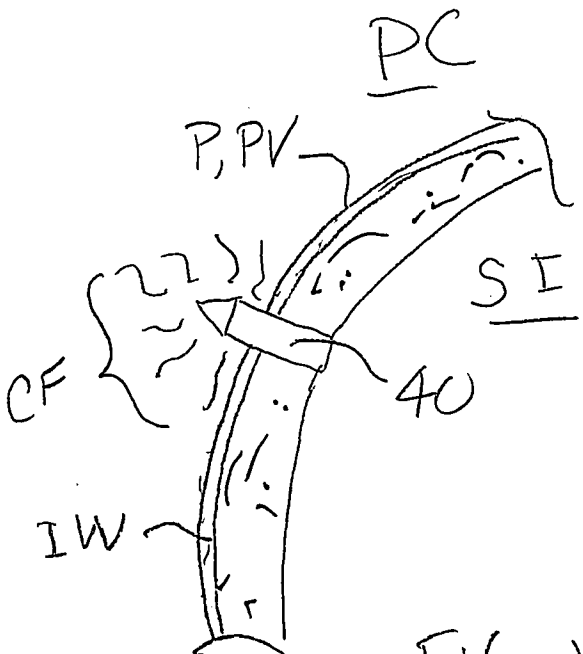

FIG-11D

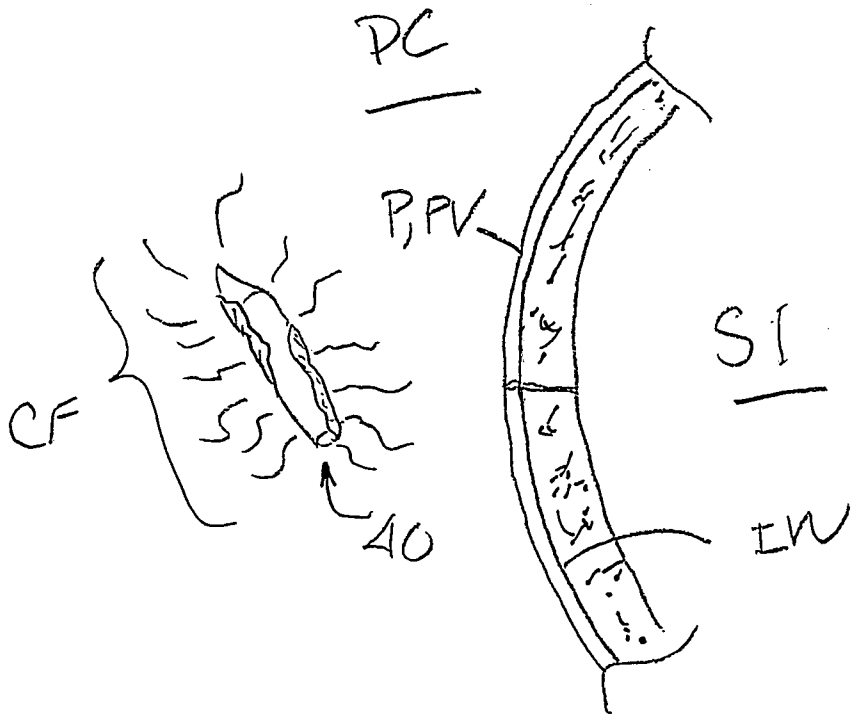

FIG-11E

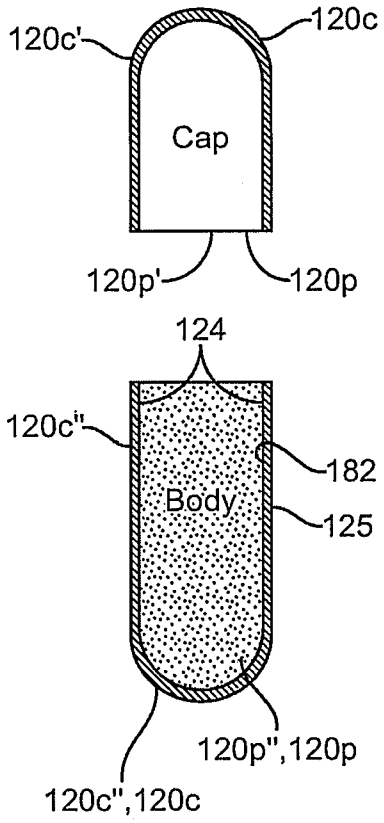

FIG. 12a

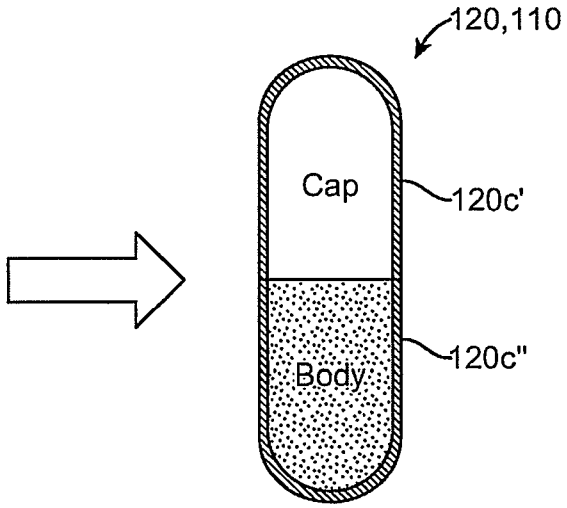

FIG. 12b

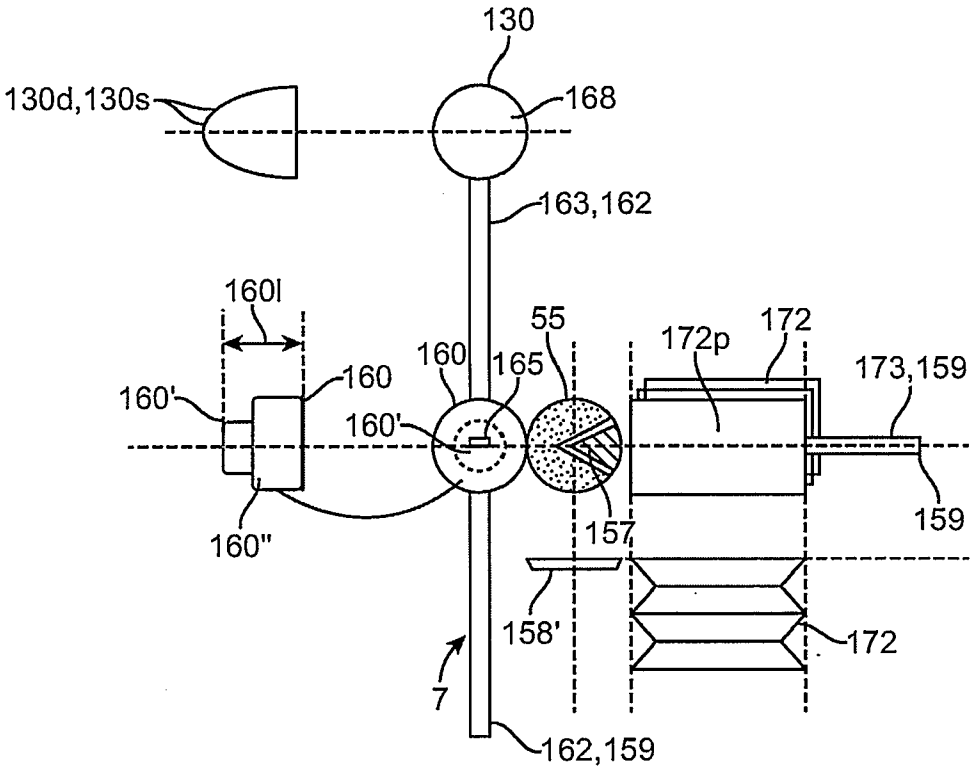
130
130d,130s
168
163,162
160l
55
172p
172
160
165
173,159
160'
160
160'
160"
157
159
158'
172
7
162,159

FIG. 13a

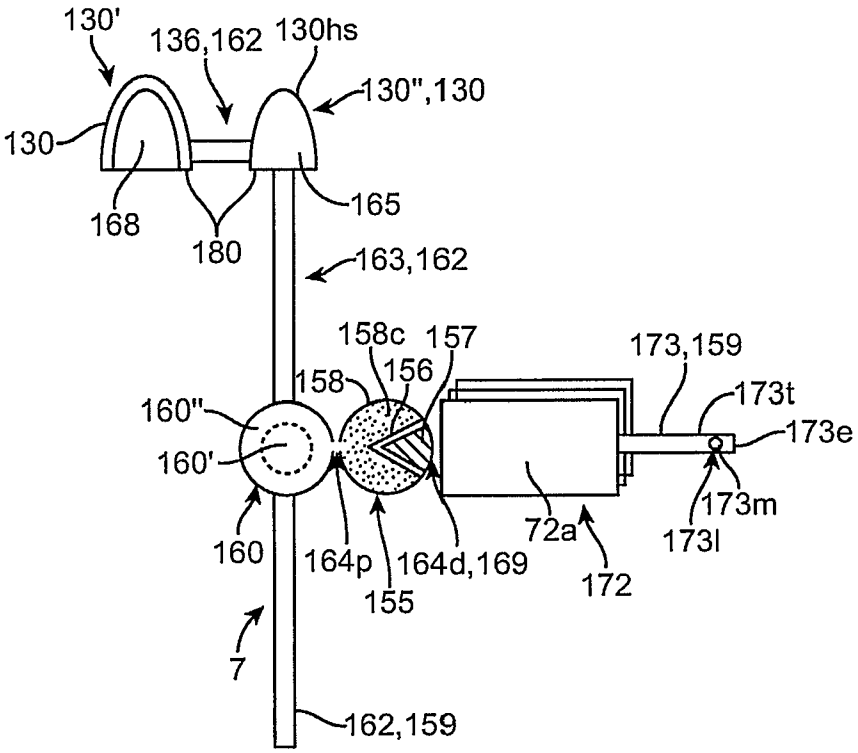
130'
136,162
130hs
130",130
130
168
180
165
163,162
158c
157
156
158
173,159
173t
173e
160"
160'
173m
173l
72a
160
164p
164d,169
172
155
7
162,159

FIG. 13b

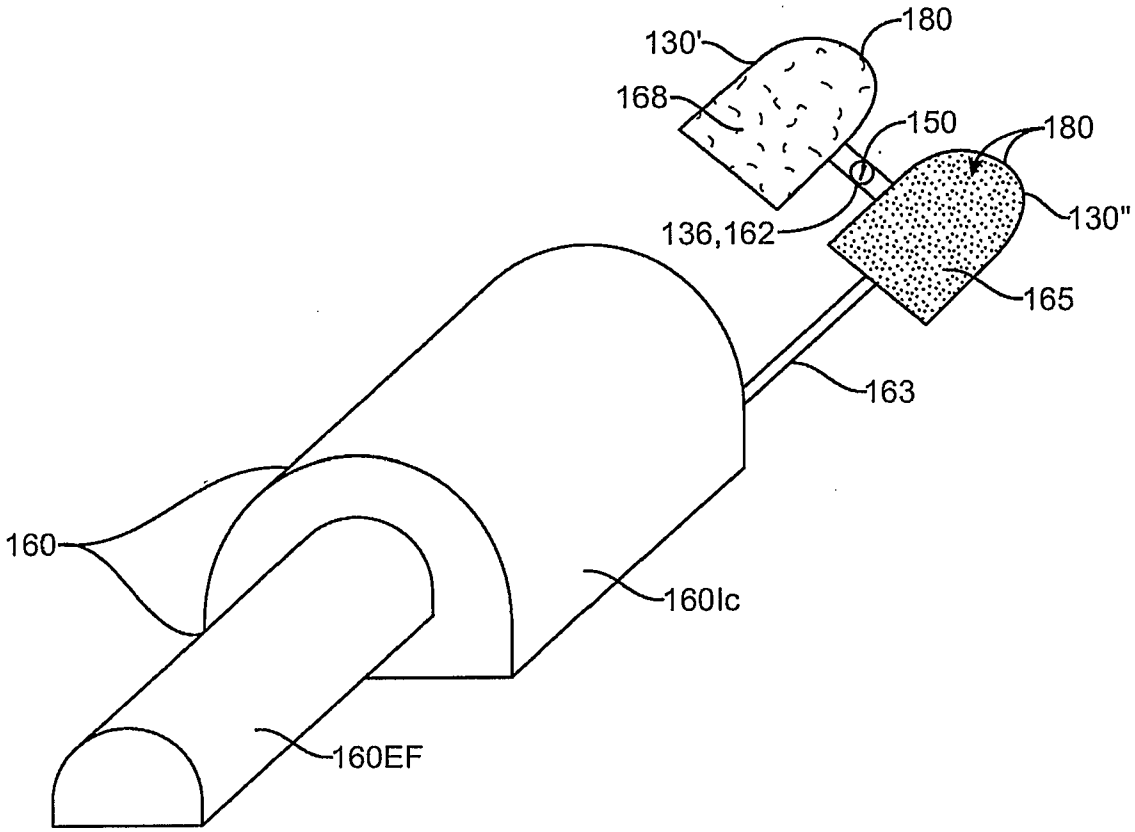

FIG. 13c

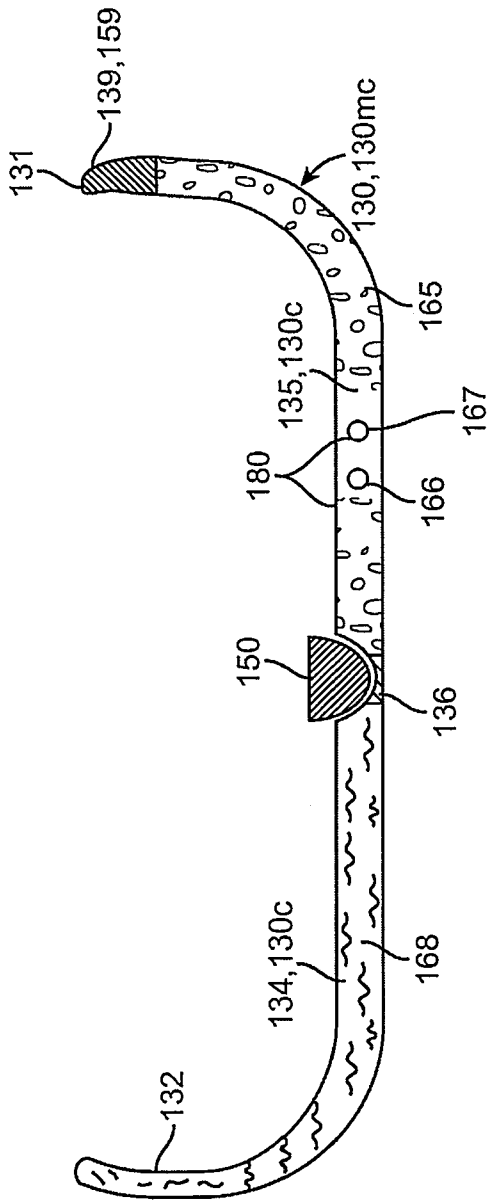
131
139,159
130,130mc
165
135,130c
167
180
166
150
136
134,130c
168
132

FIG. 14a

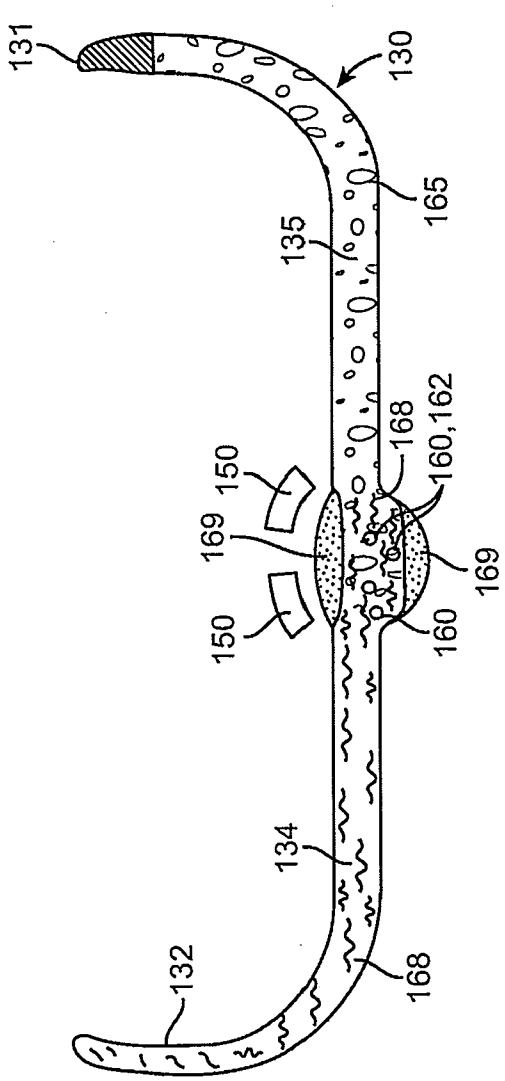

FIG. 14b

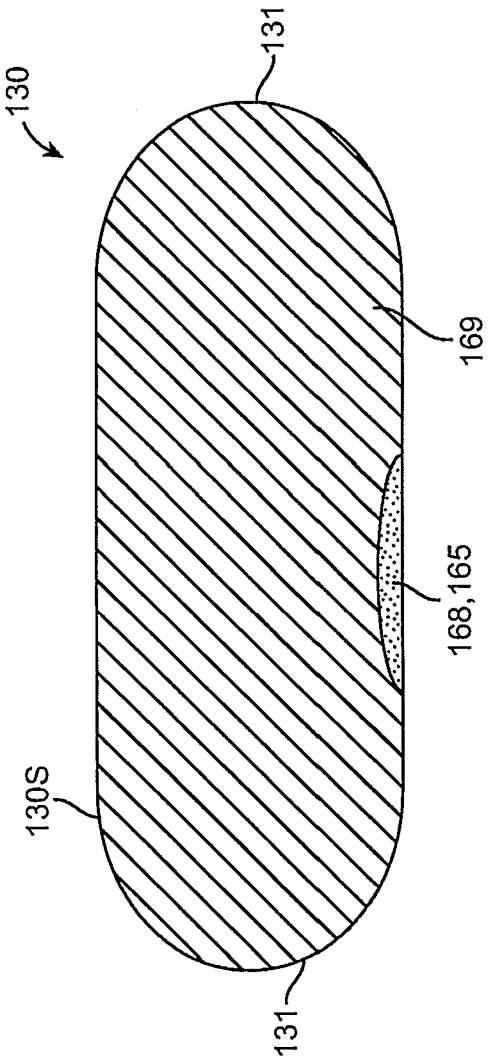

FIG. 14c

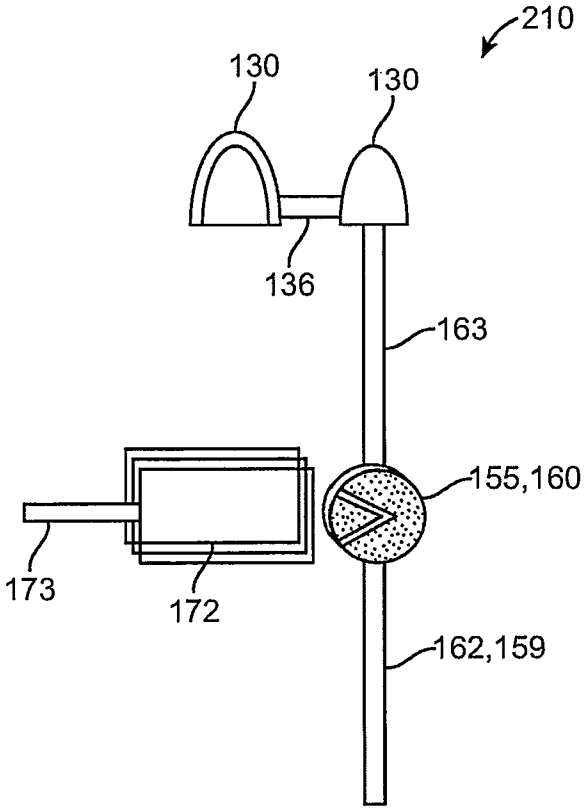

FIG. 15a

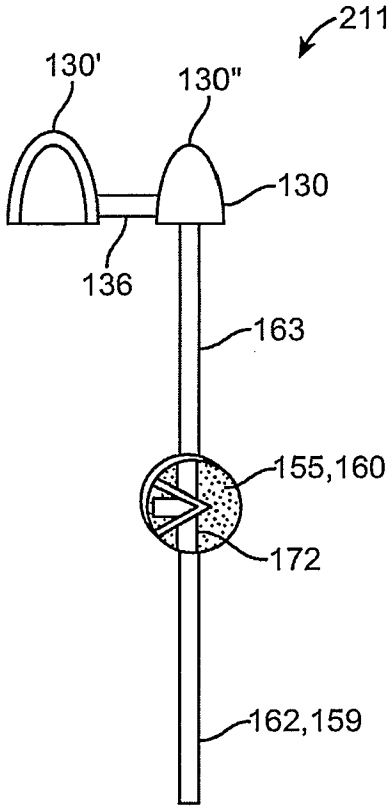

FIG. 15b

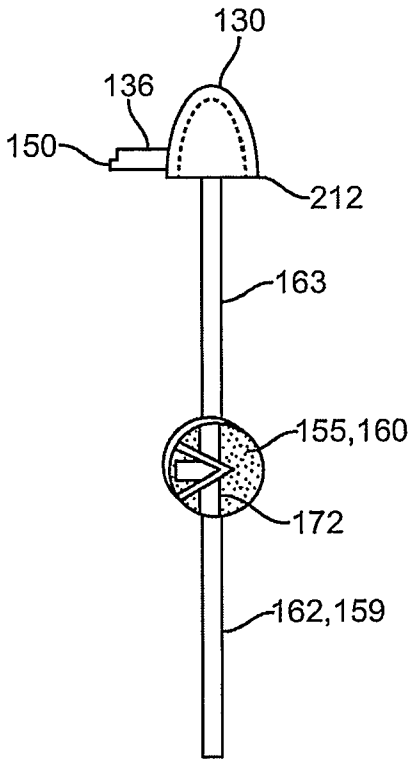

FIG. 15c

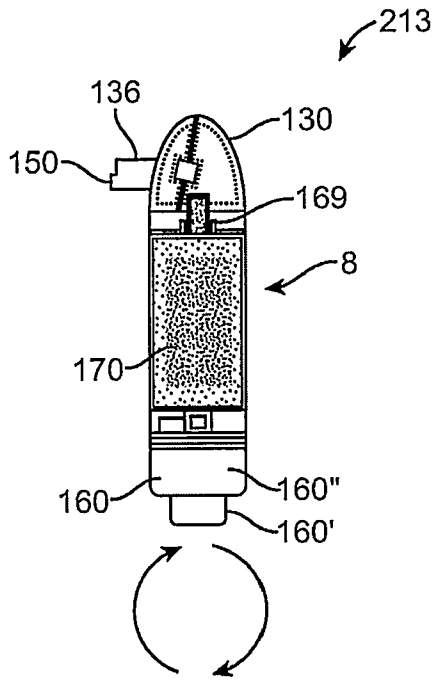

FIG. 15d

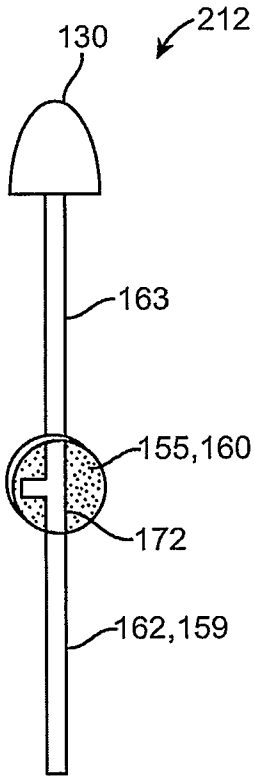

FIG. 15e

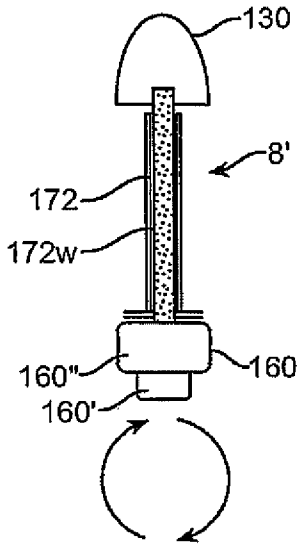

FIG. 15f

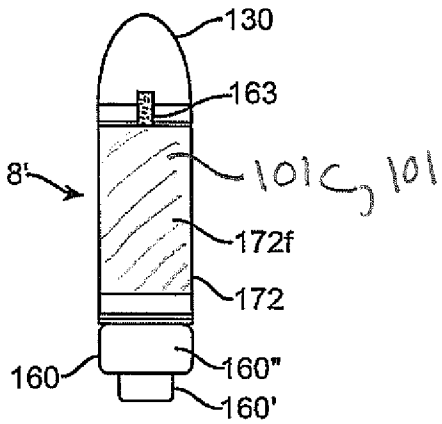

FIG. 15g

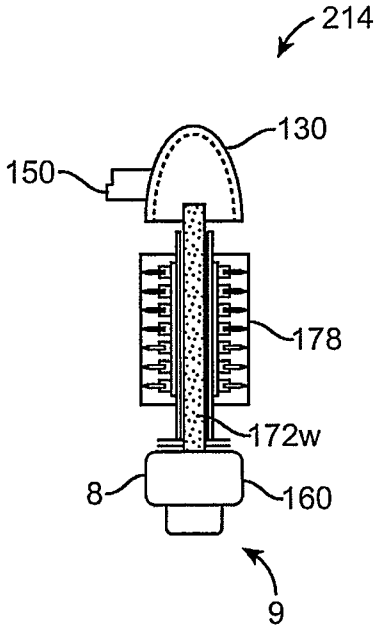

FIG. 16a

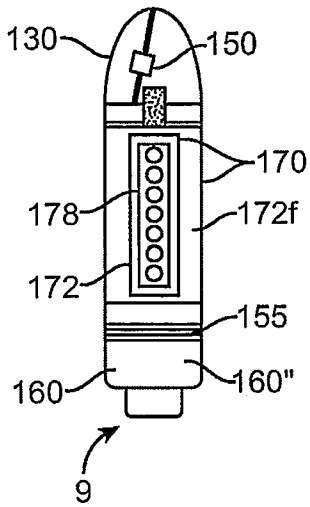

FIG. 16b

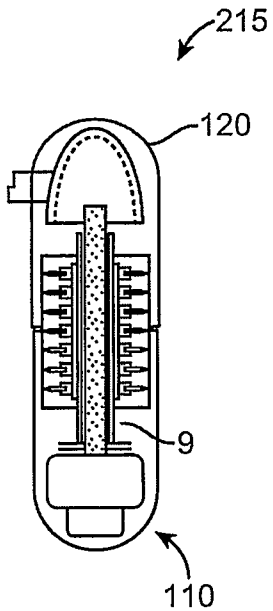

FIG. 17a

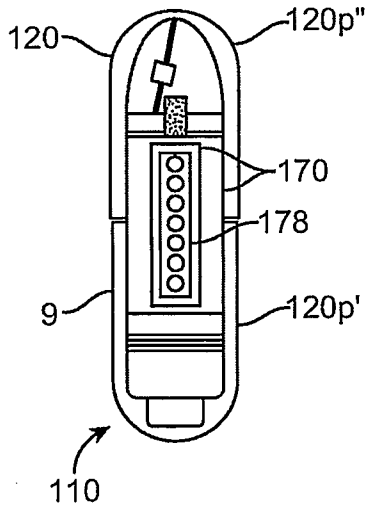

FIG. 17b

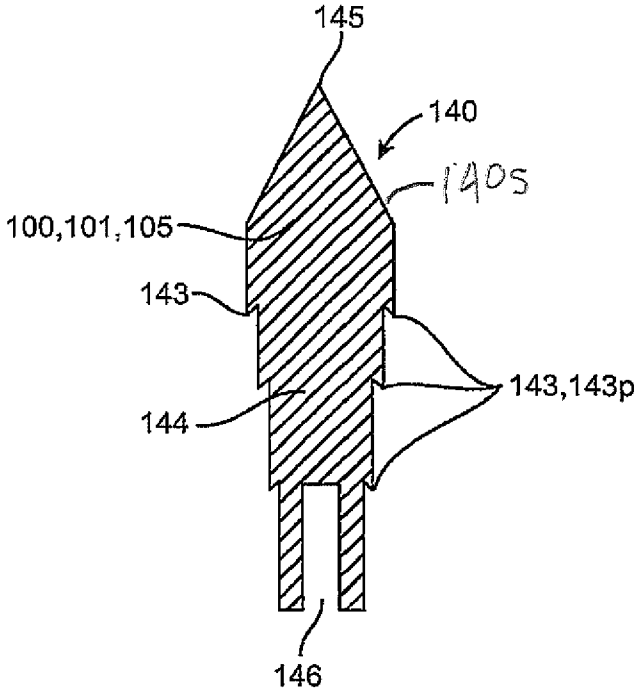

FIG. 18a

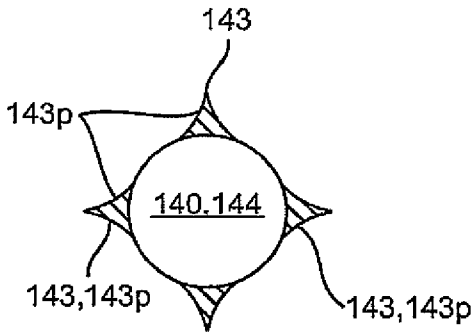

FIG. 18b

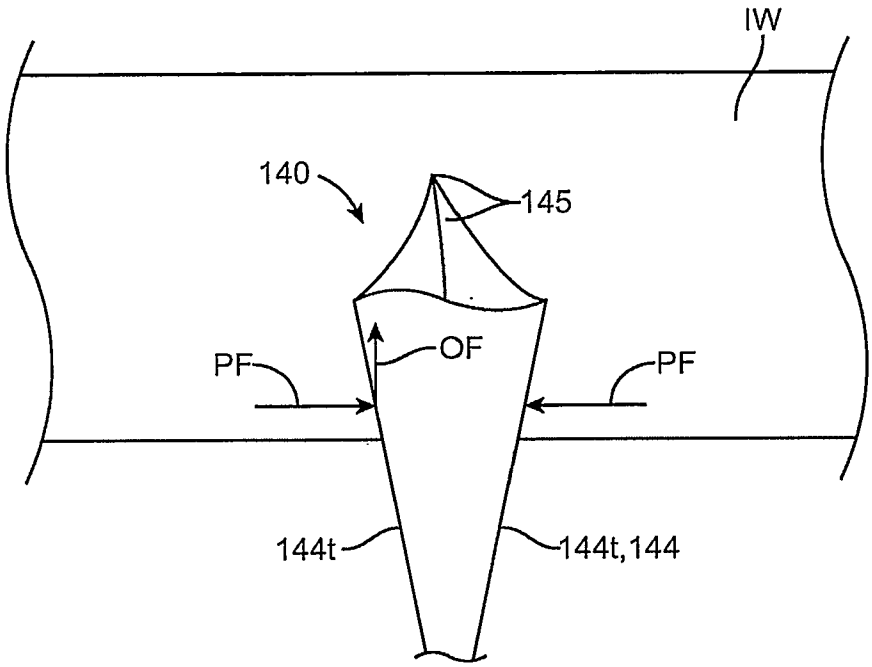

FIG. 18c

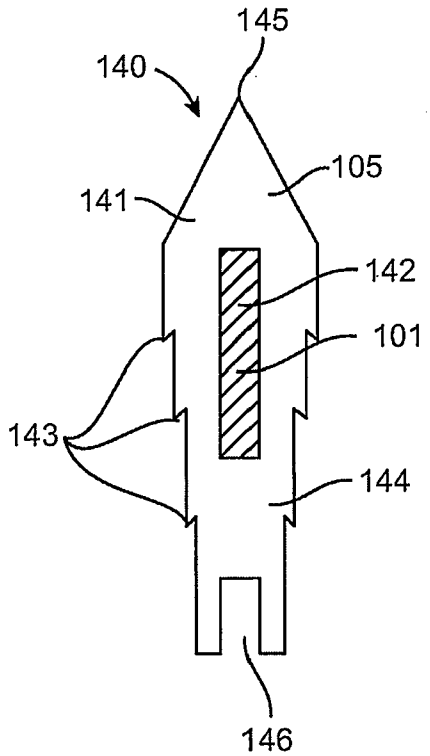

FIG. 18d

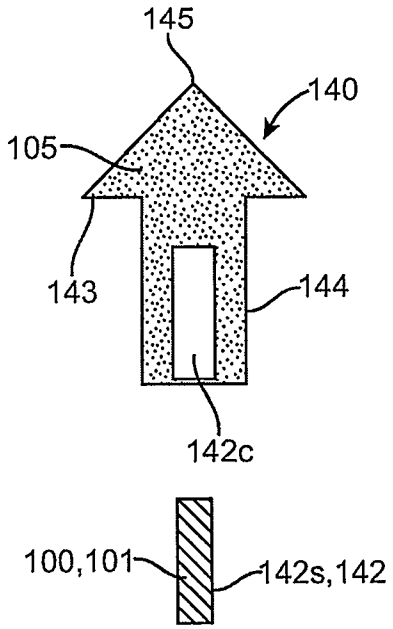

FIG. 18e

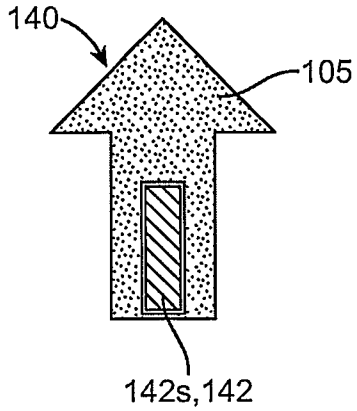

FIG. 18f

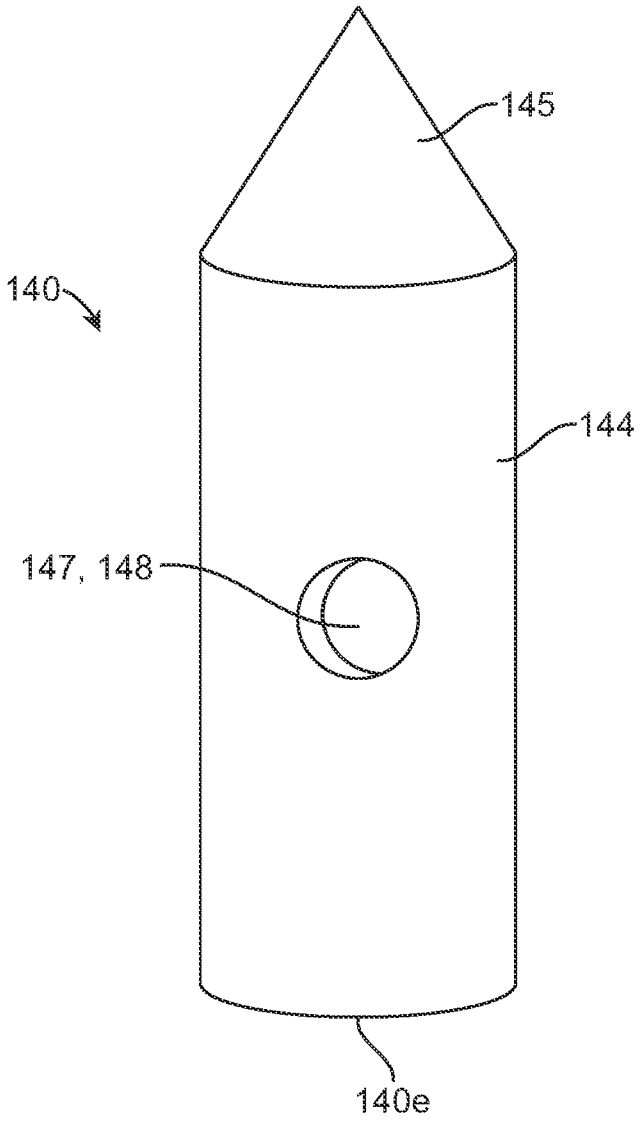

FIG. 18G

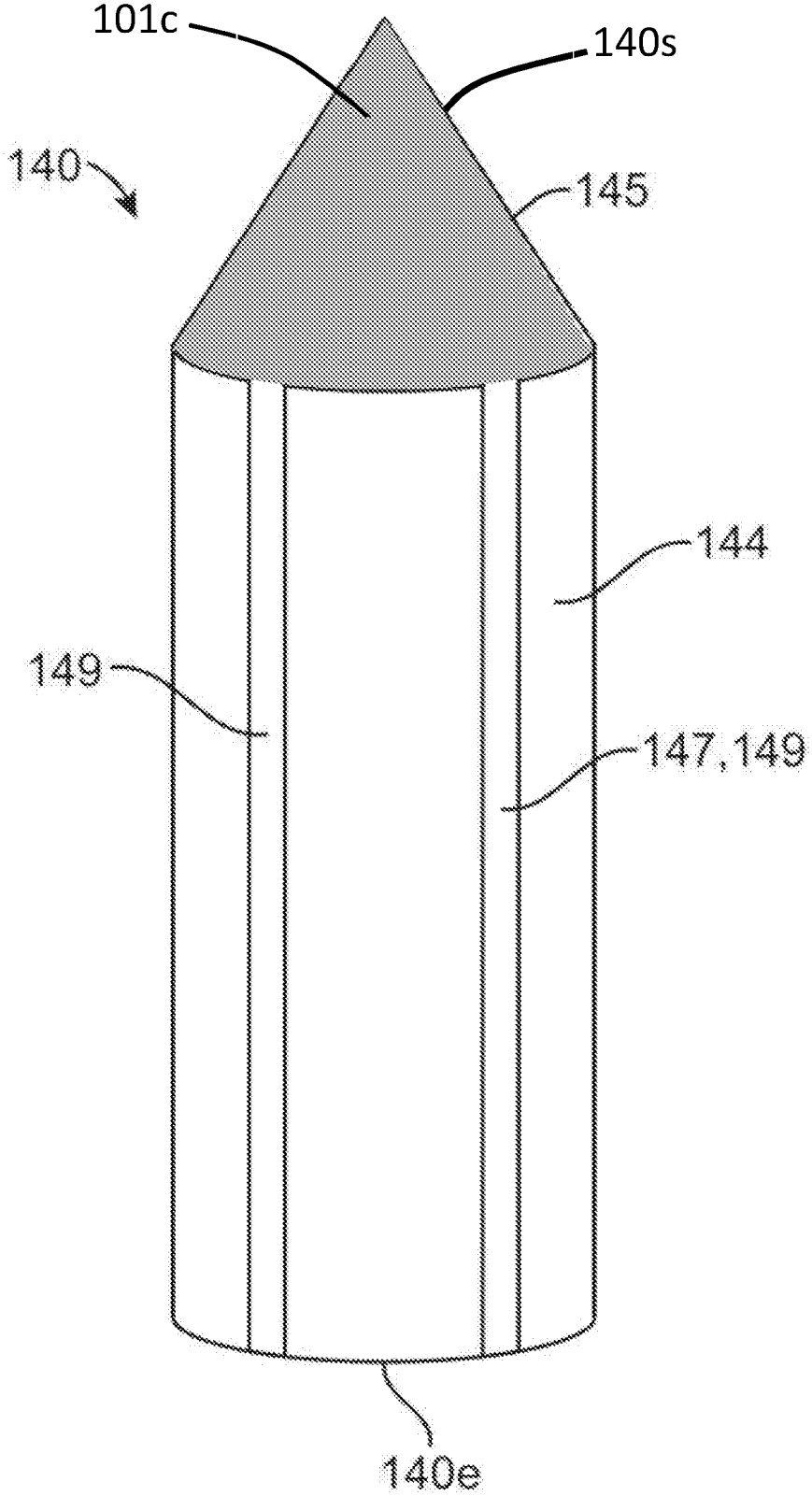

FIG. 18H

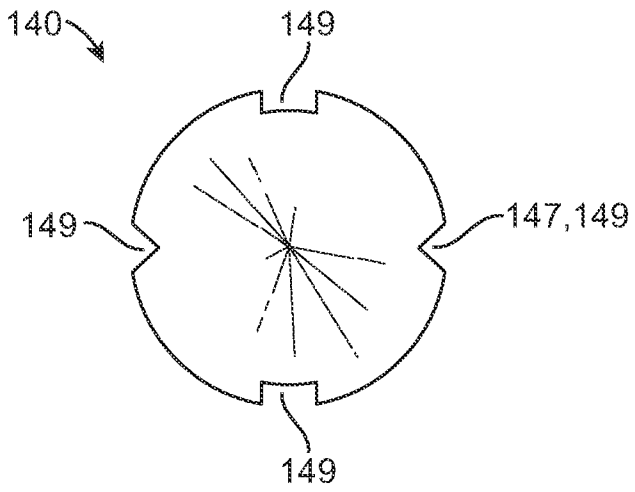

FIG. 18I

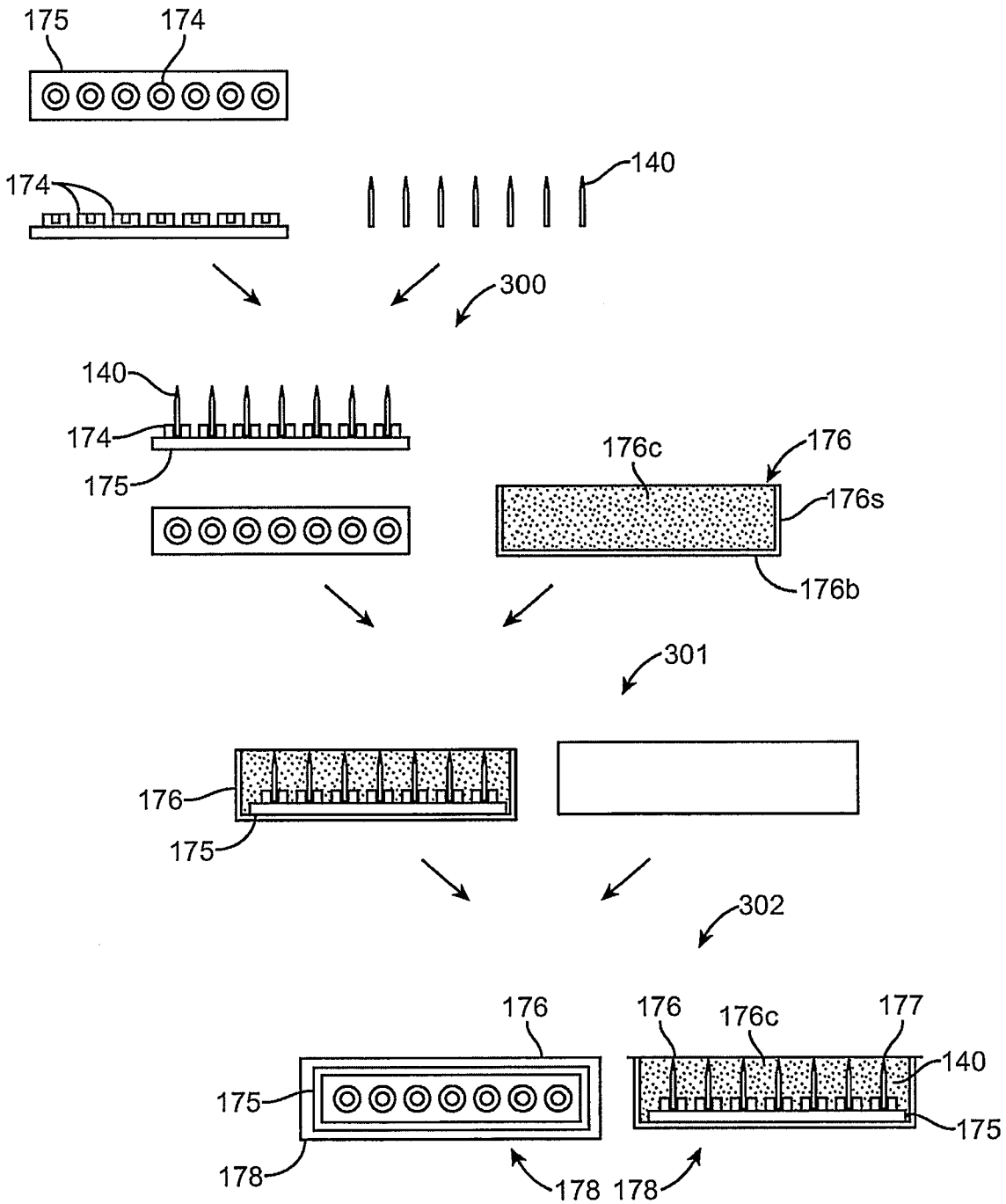
175
174
174
140
300
140
174
175
176c
176
176s
176b
301
176
175
302
176
176
176c
177
140
175
175
178
178
178

FIG. 19

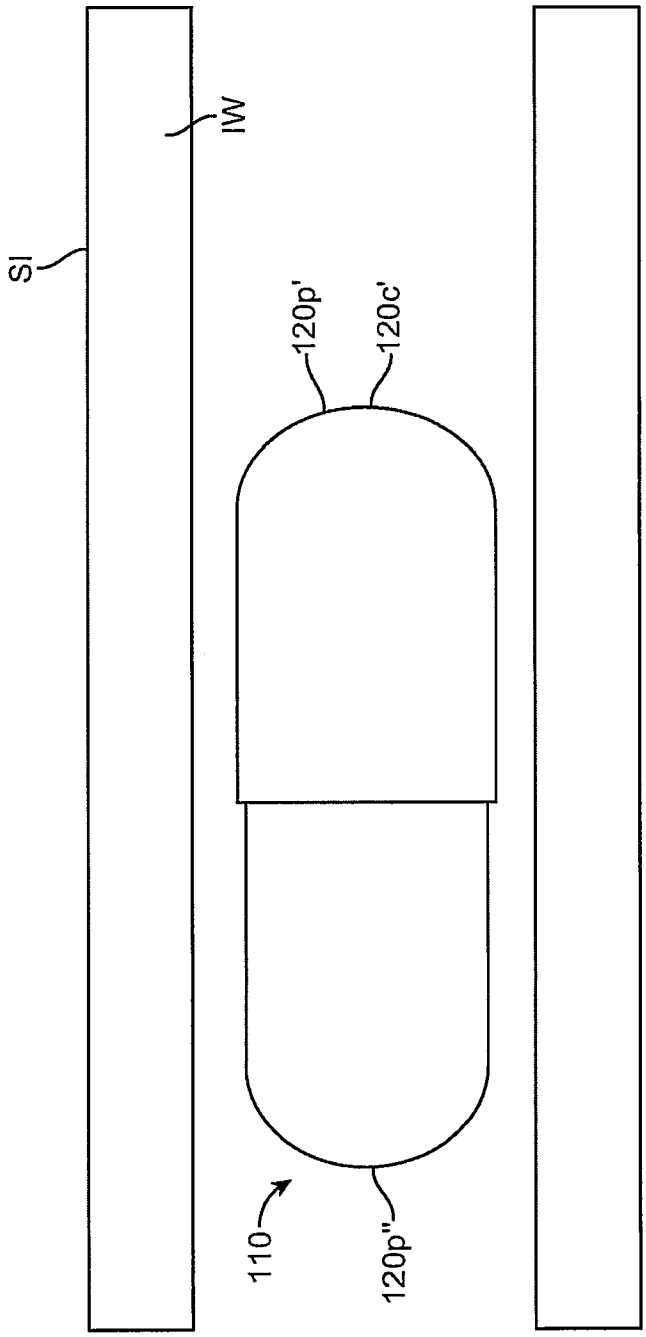

FIG. 20a

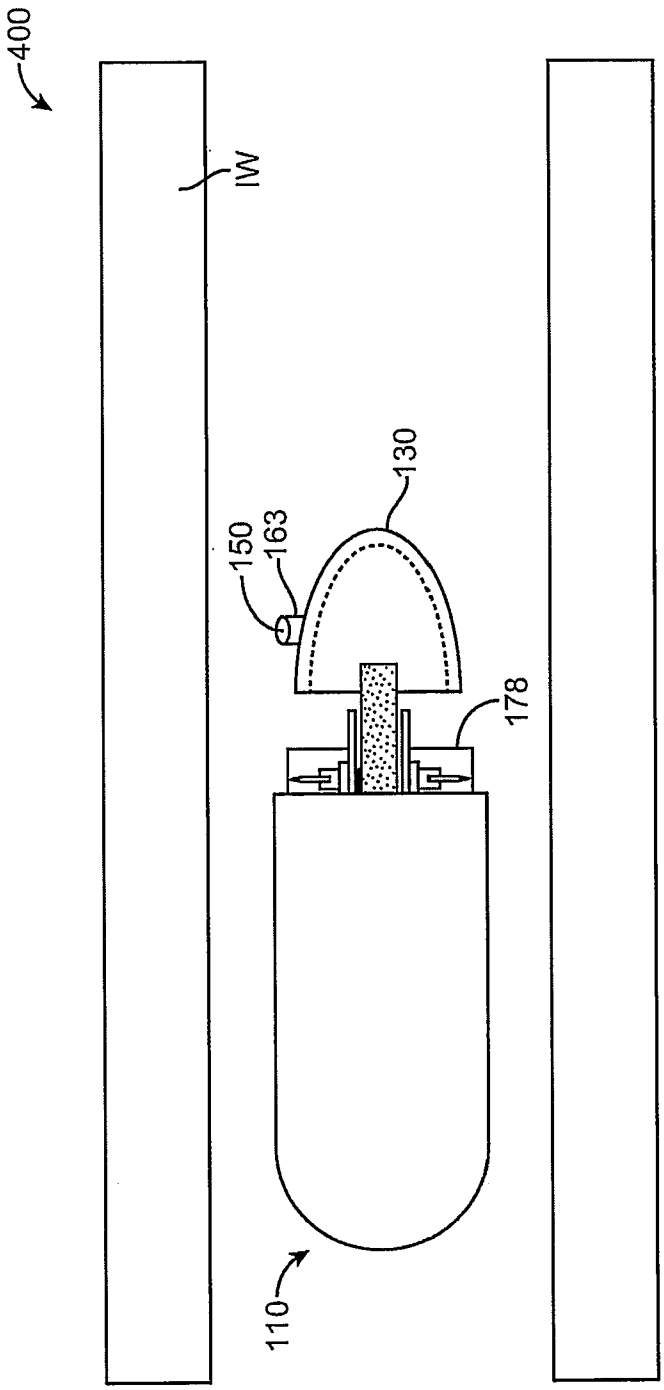

FIG. 20b

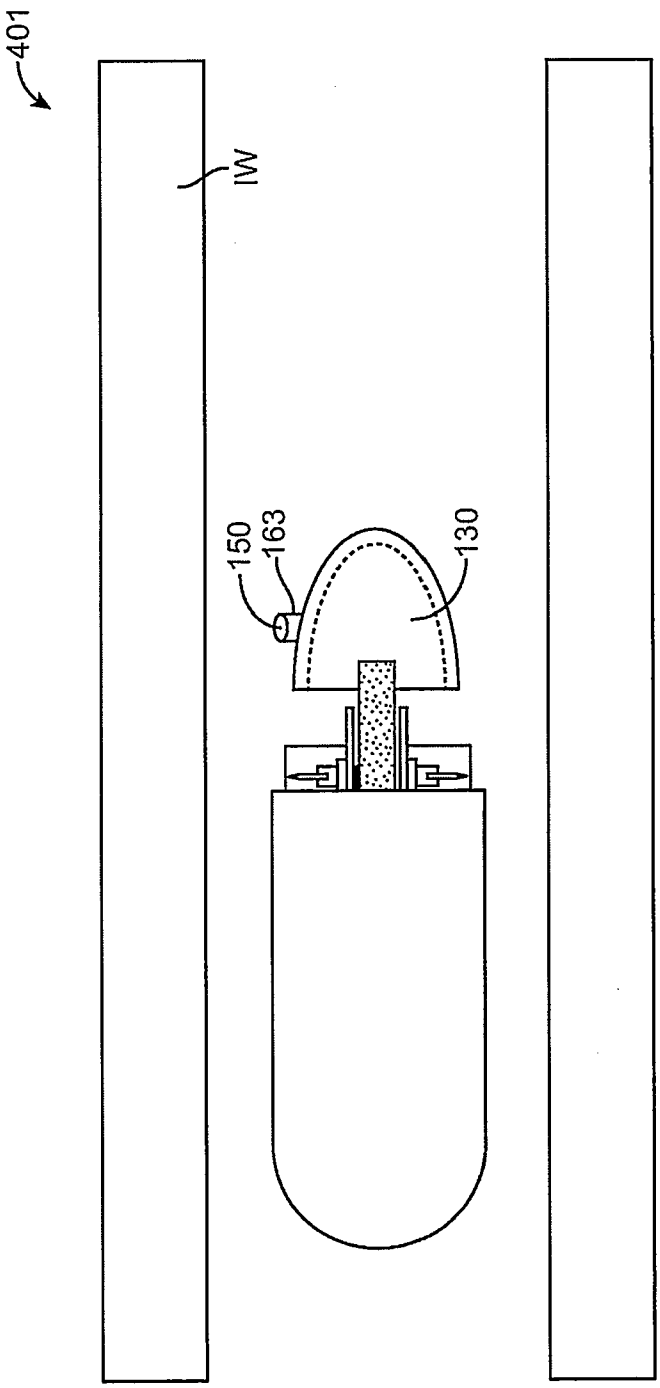

FIG. 20c

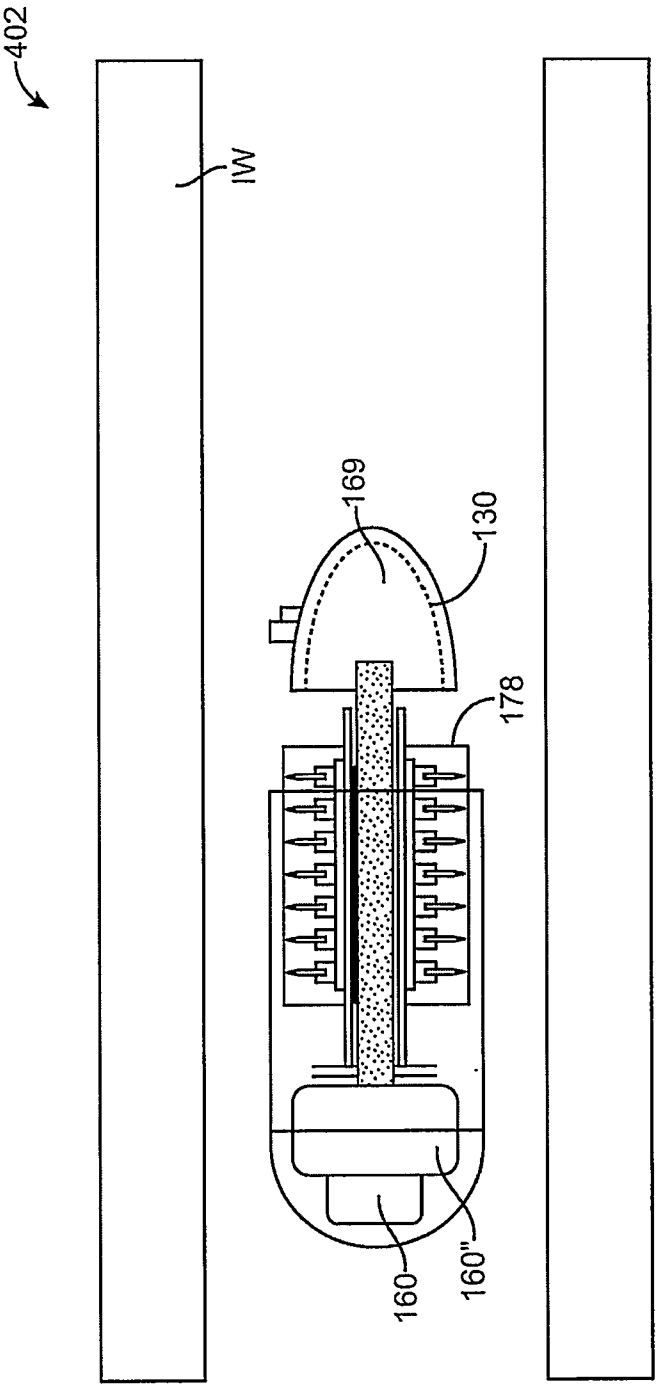

FIG. 20d

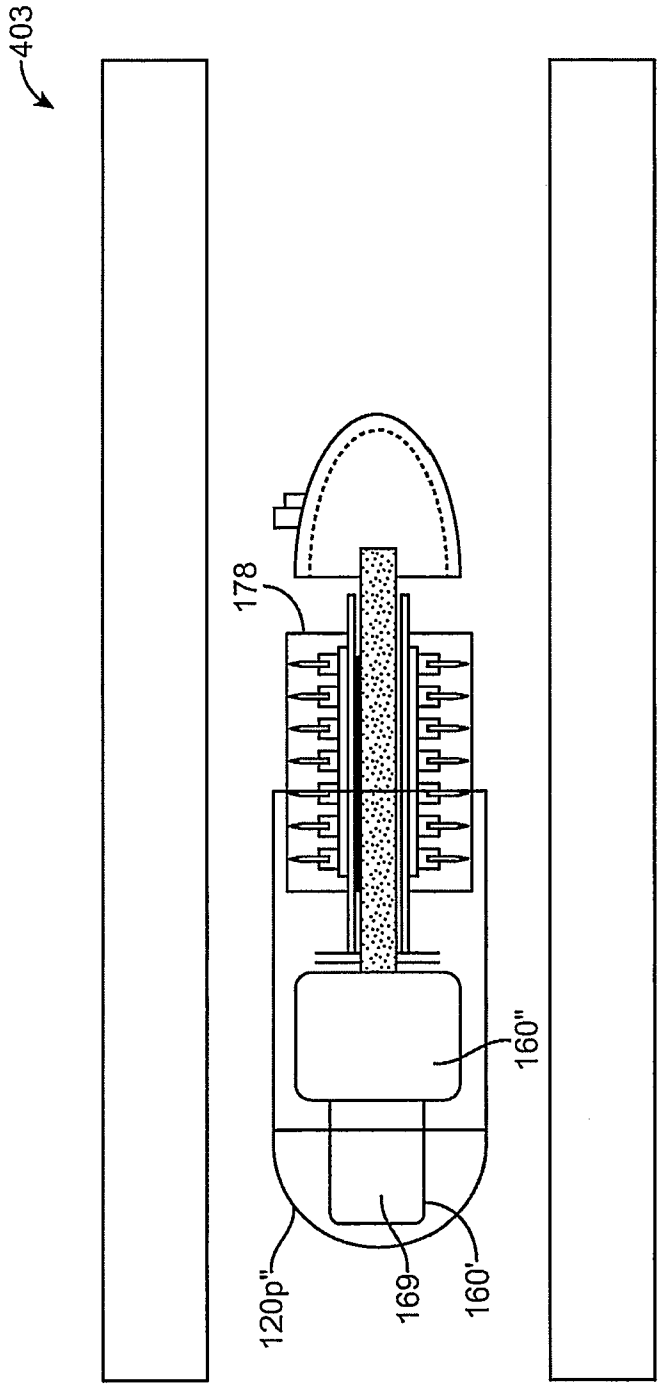

FIG. 20e

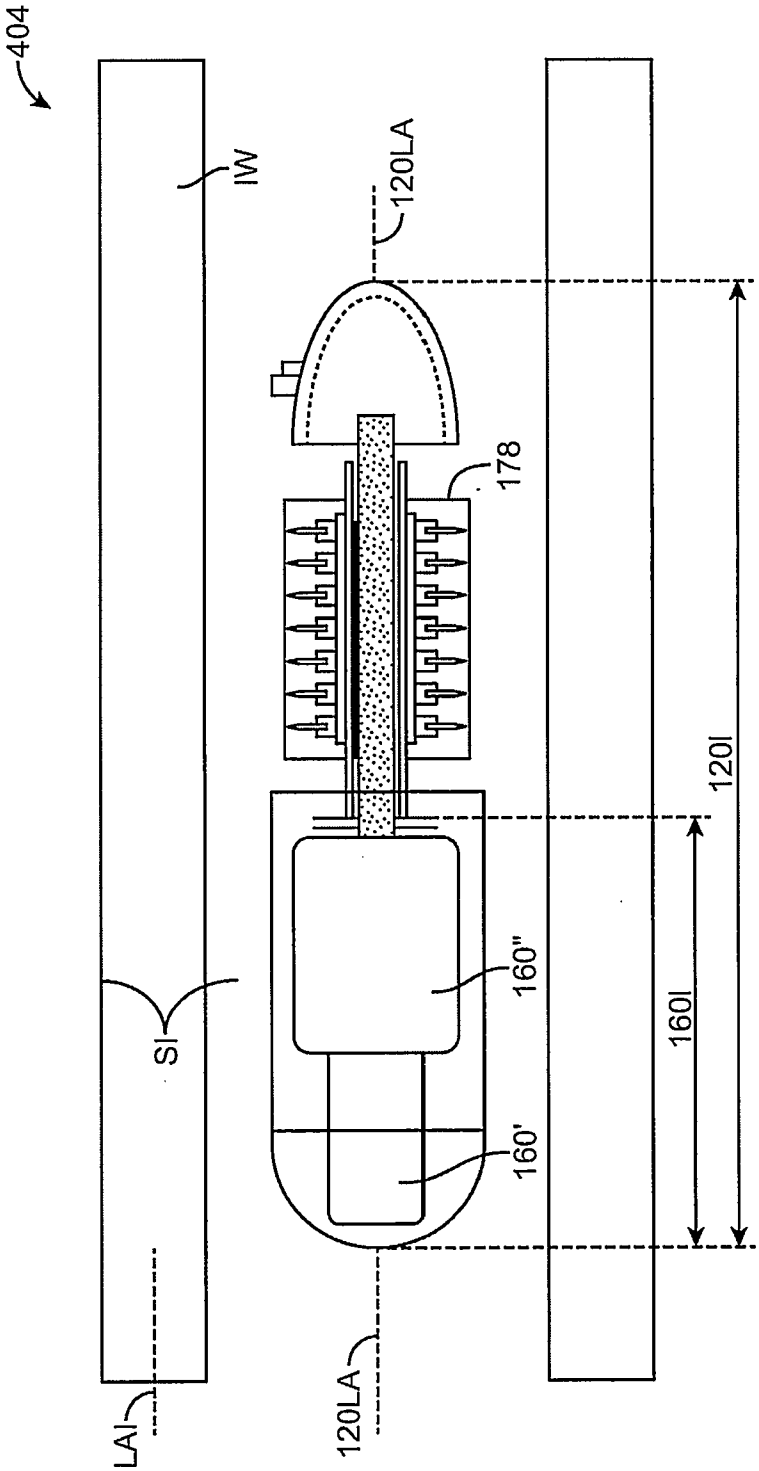

FIG. 20f

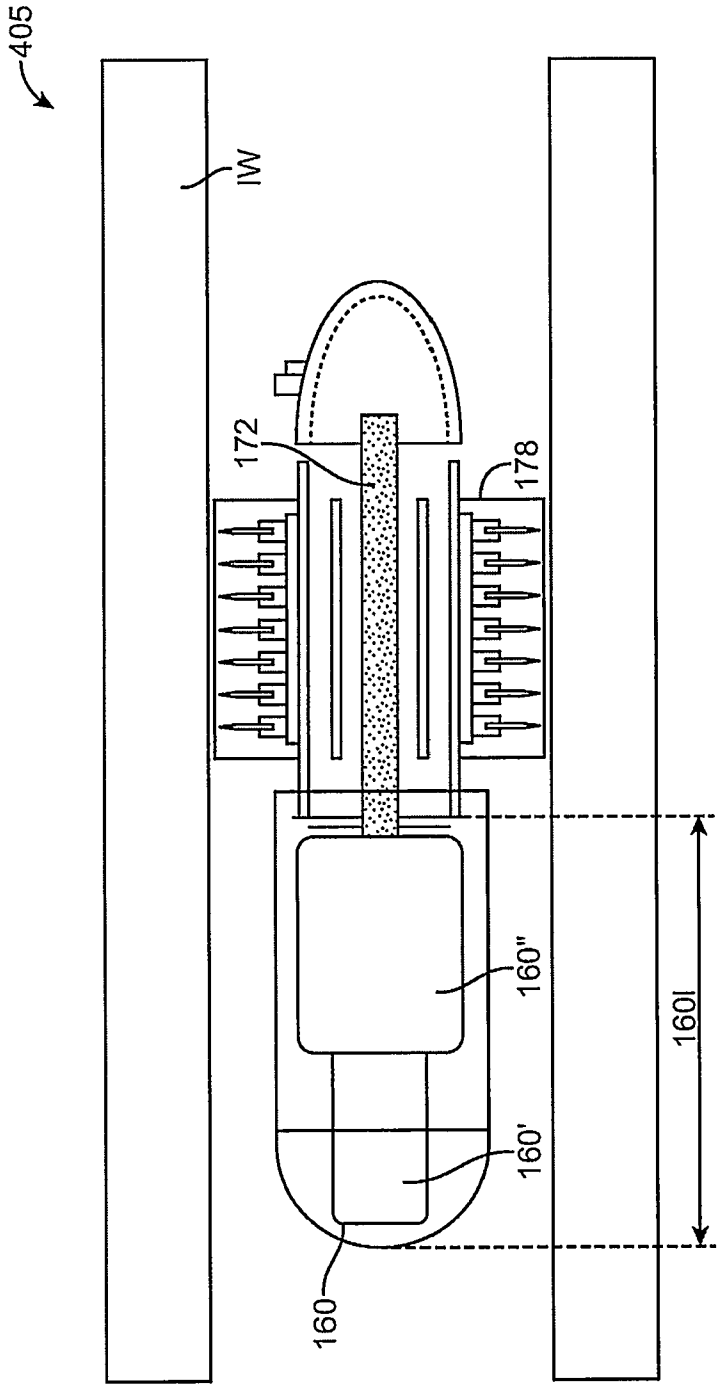

FIG. 20g

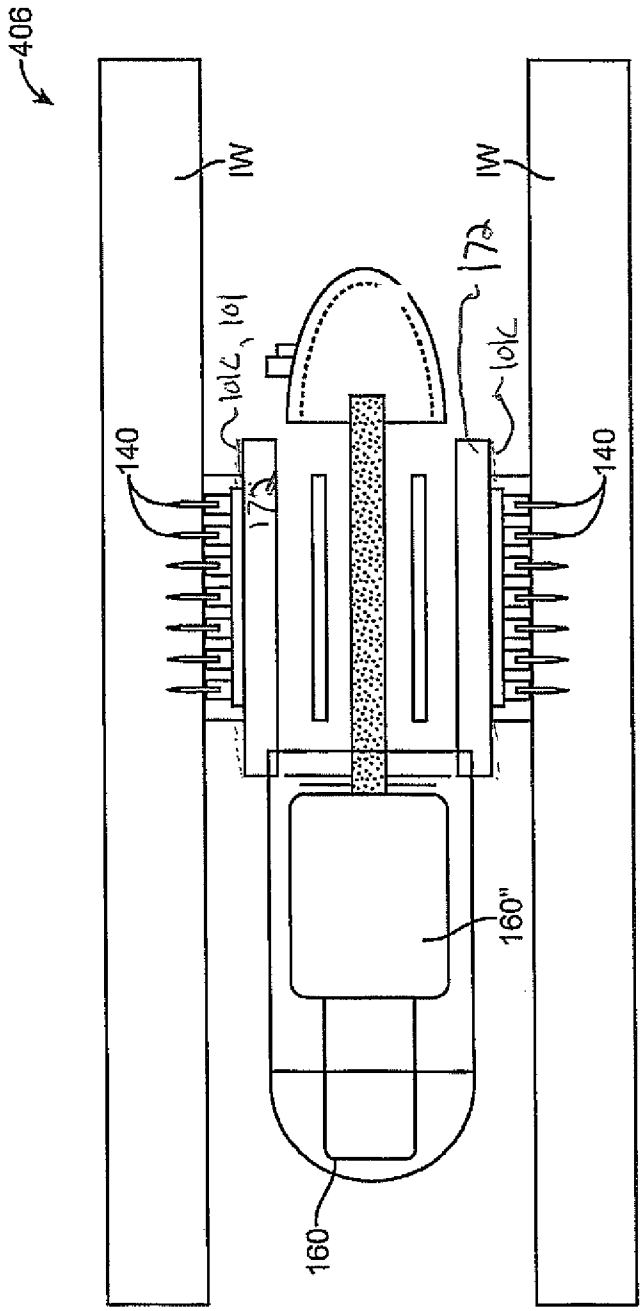

FIG. 20h

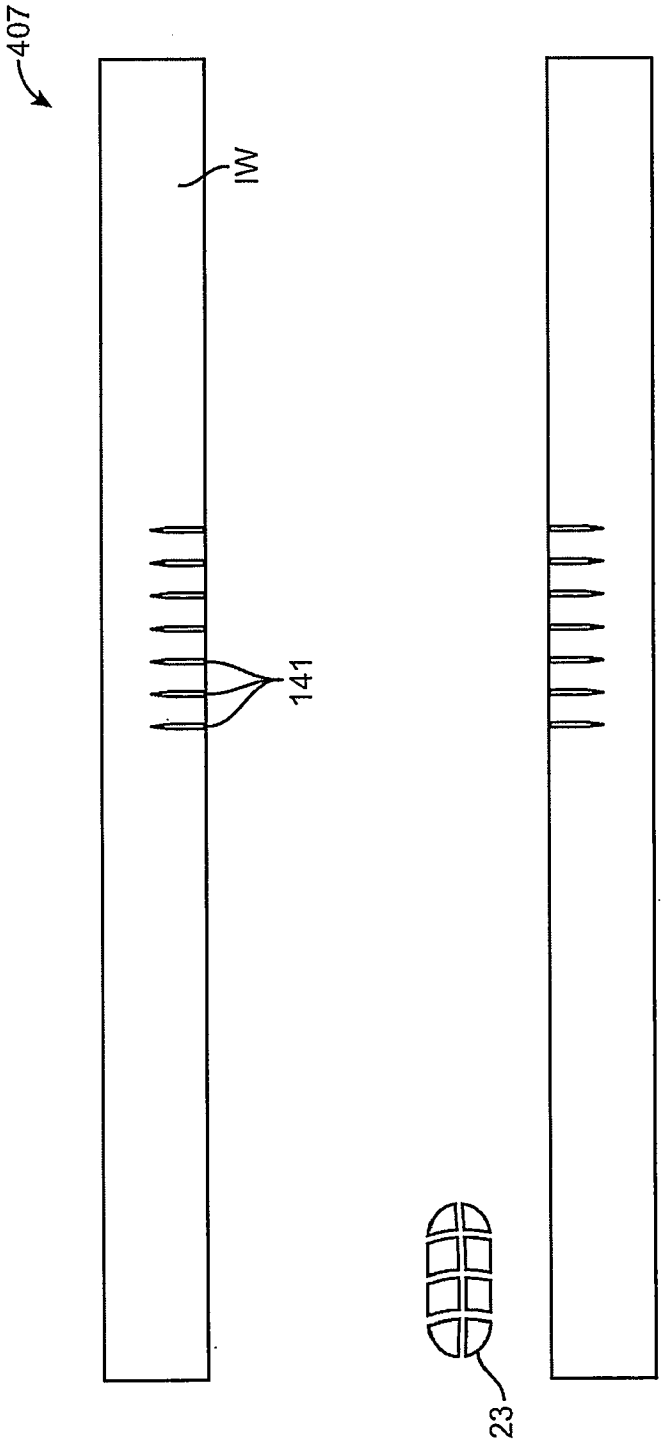

FIG. 20I

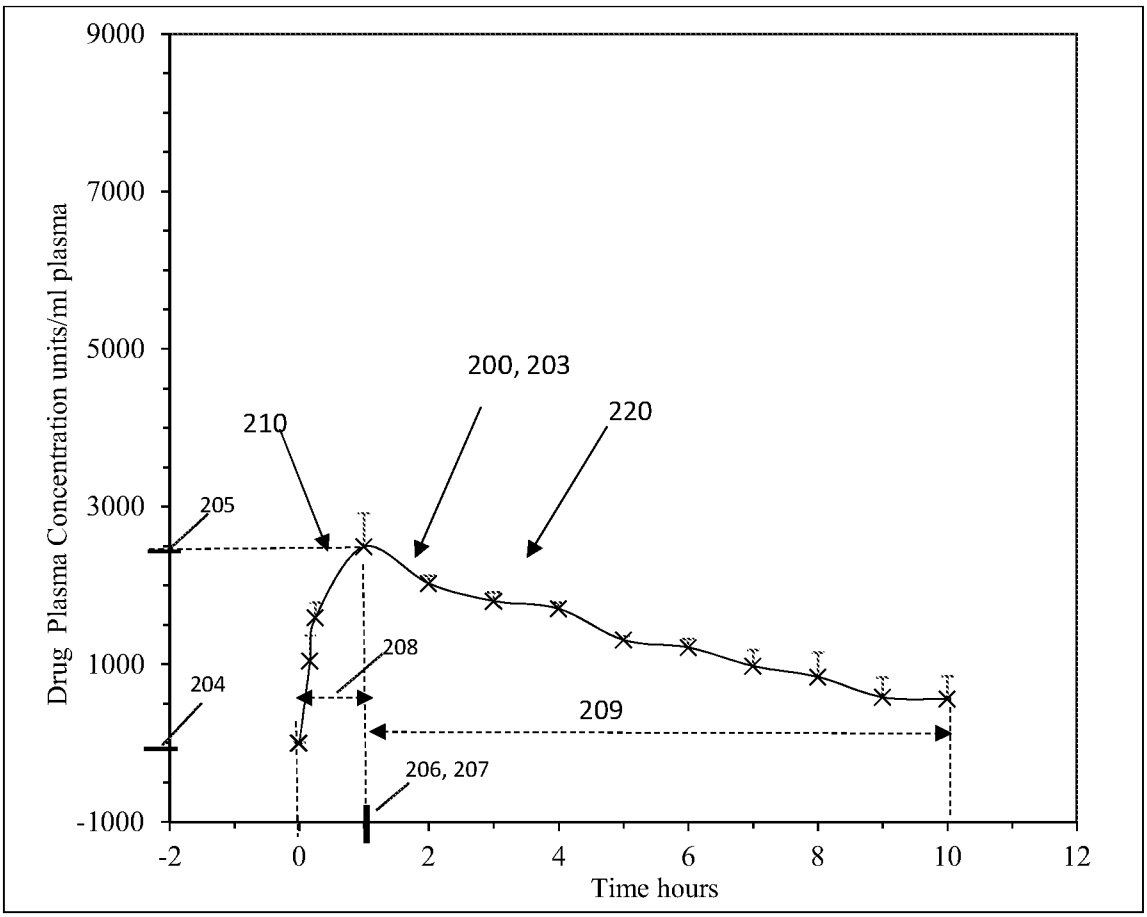

Fig. 21. Plasma concentration-time profile of a therapeutic agent delivered by an embodiment of the swallowable capsule.

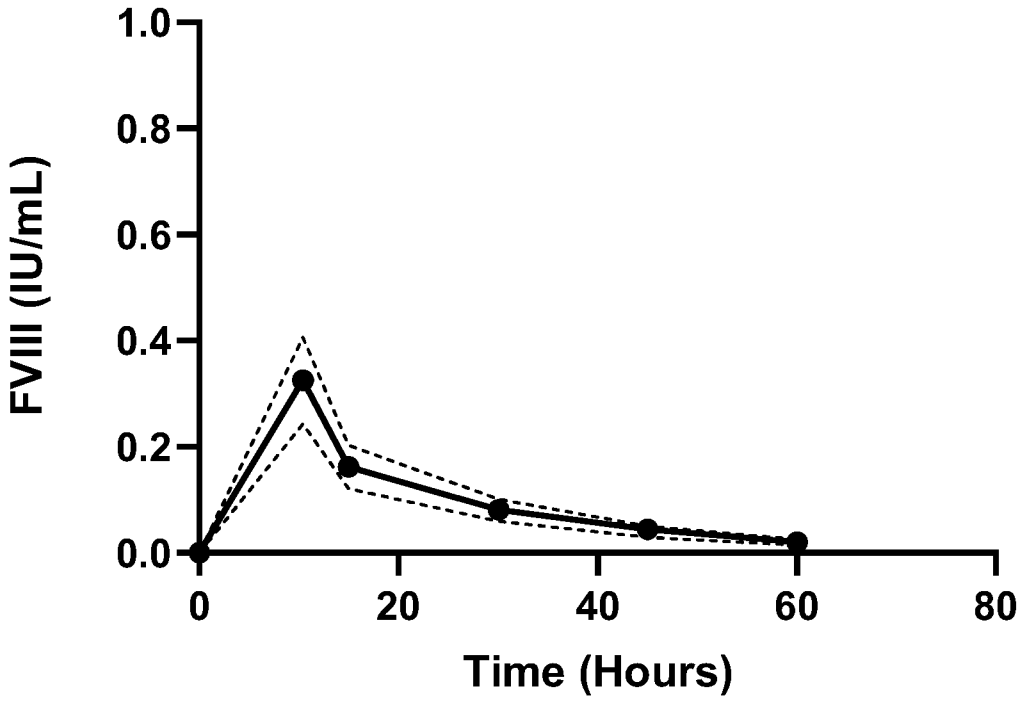

Fig. 22. Plasma concentration-time profile for delivery of 100 IU/Kg of FVIII (ADYNOVATE) using an embodiment of the swallowable capsule.

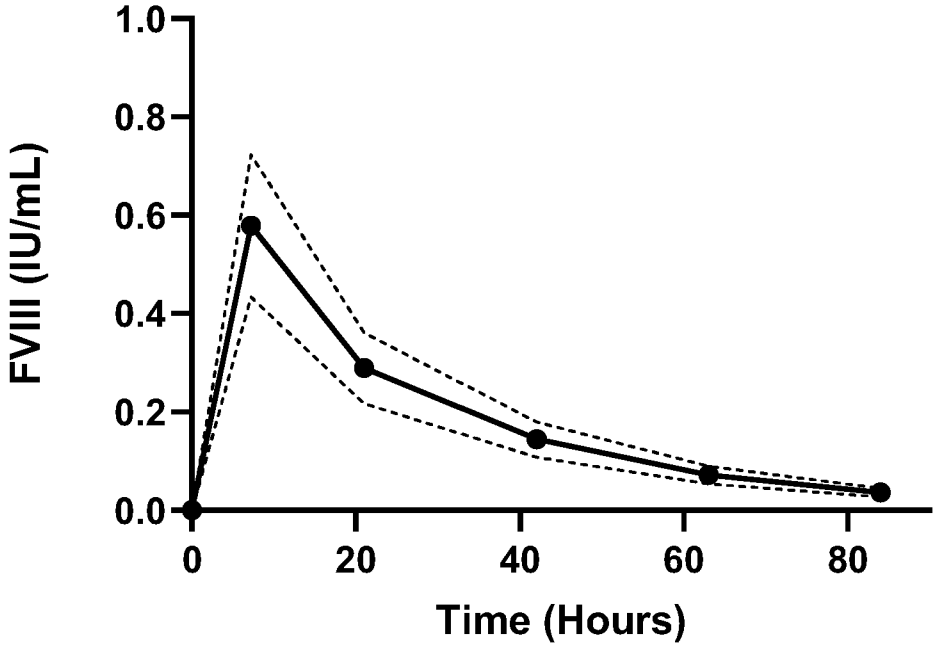

Fig. 23. Plasma concentration-time profile for delivery of 100 IU/Kg of FVIII (ESPEROCT) using an embodiment of the swallowable capsule.

Figure 24a Simulated Human Plasma Concentration Profile for Alirocumab delivered as an injected 150mg dose every two weeks days.

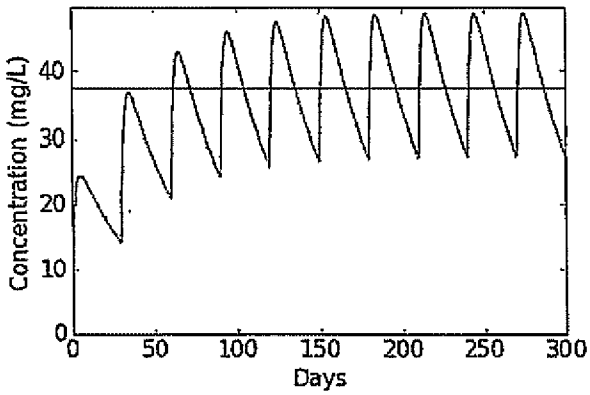

Figure 24b Simulated Human Plasma Concentration Profile for Alirocumab delivered daily as a 10.5 mg dose using swallowable device embodiments of the invention.

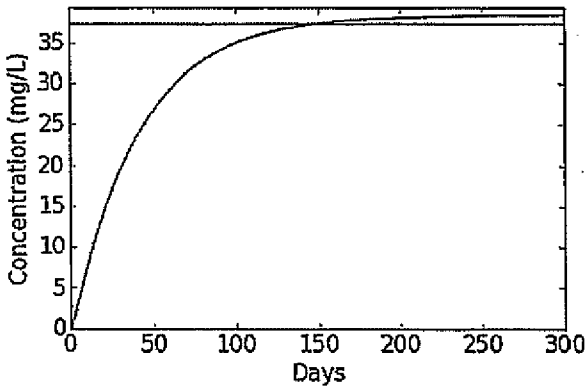

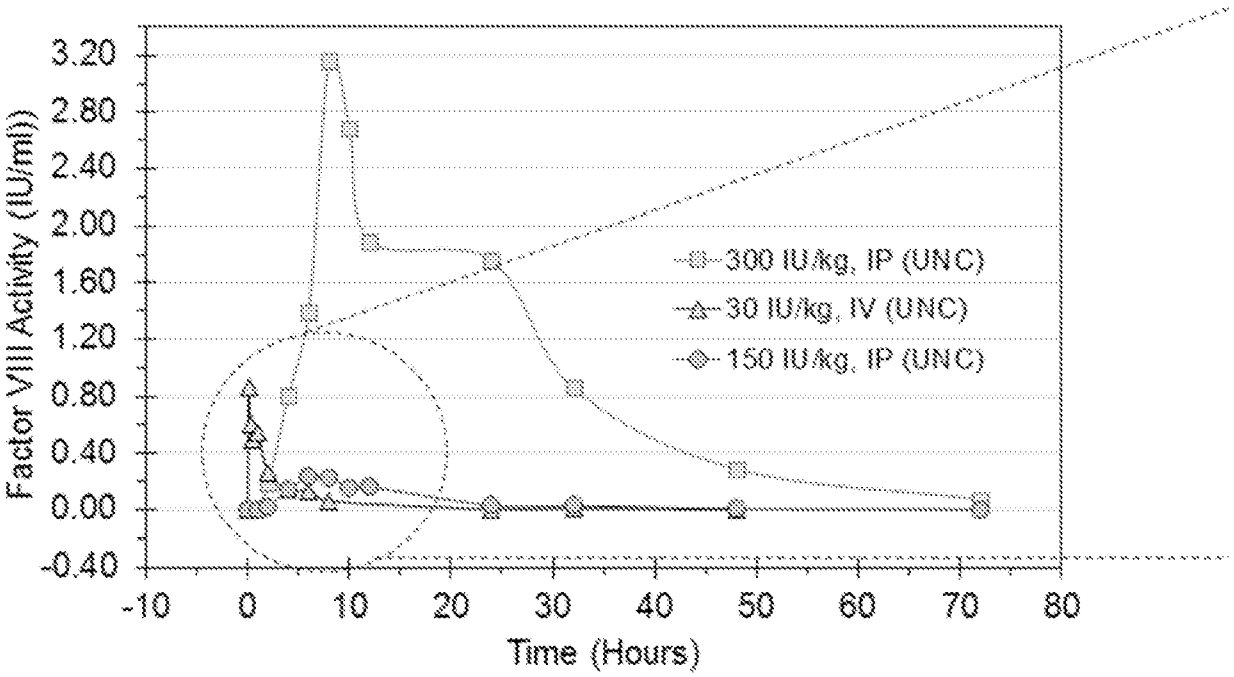
3.20
2.80
2.40
2.00
1.60
1.20
0.80
0.40
0.00
-0.40
Factor VIII Activity (IU/ml))
-10
0
10
20
30
40
50
60
70
80
Time (Hours)
300 IU/kg, IP (UNC)
30 IU/kg, IV (UNC)
150 IU/kg, IP (UNC)

FIG. 25A

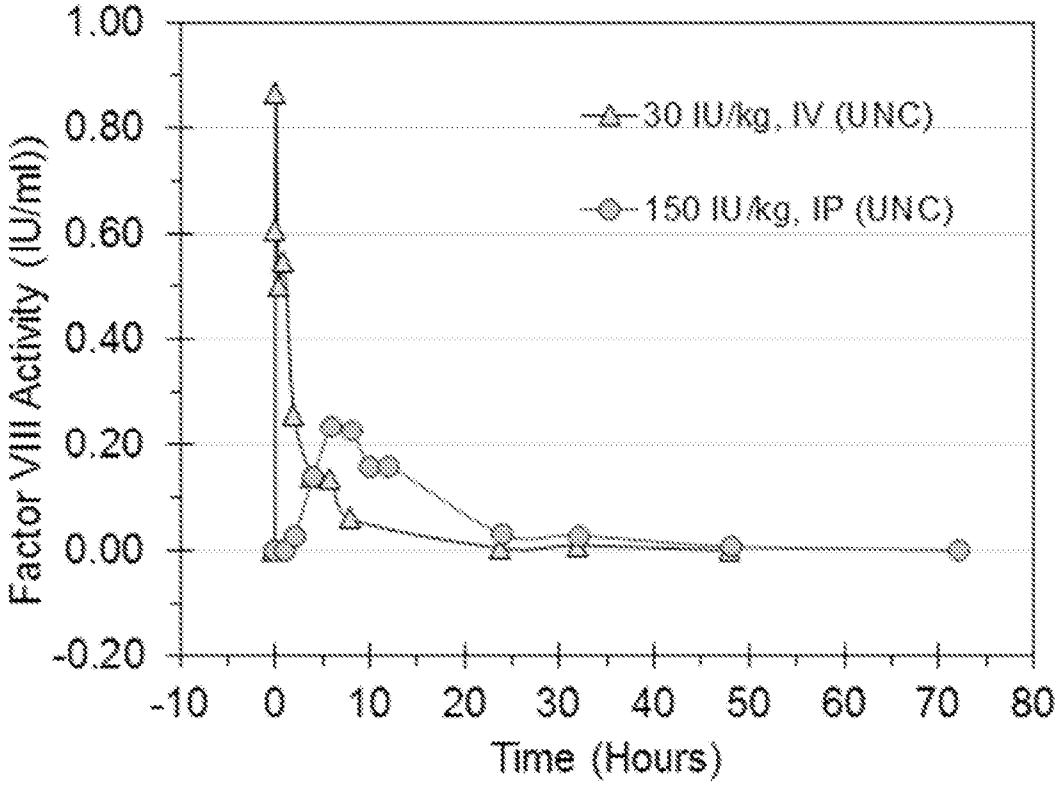
1.00
0.80
0.60
0.40
0.20
0.00
-0.20
Factor VIII Activity (IU/ml))
30 IU/kg, IV (UNC)
150 IU/kg, IP (UNC)
-10
0
10
20
30
40
50
60
70
80
Time (Hours)

FIG. 25B

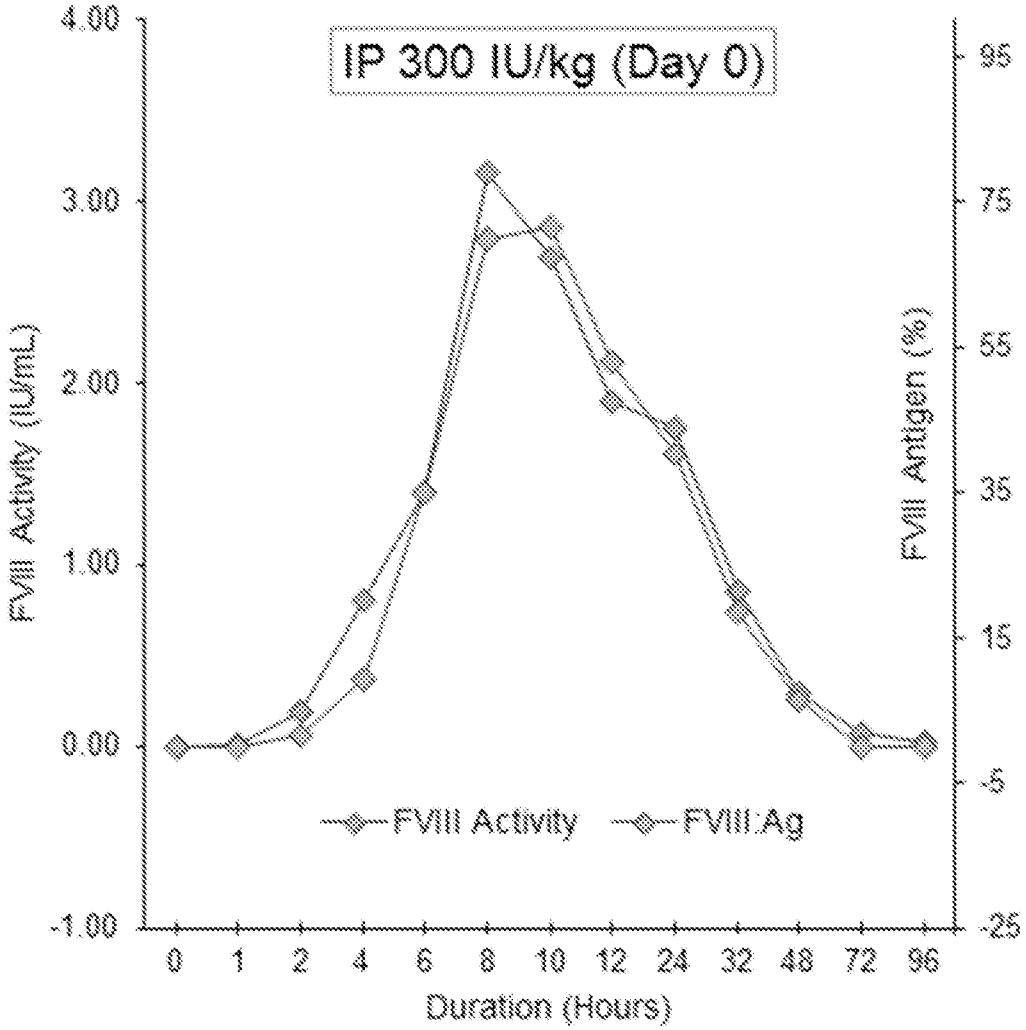
IP 300 IU/kg (Day 0)
FVIII Activity (IU/mL)
4.00
3.00
2.00
1.00
0.00
-1.00
FVIII Antigen (%)
95
75
55
35
15
-5
-25
FVIII Activity
FVIII:Ag
0
1
2
4
6
8
10
12
24
32
48
72
96
Duration (Hours)

FIG. 26A

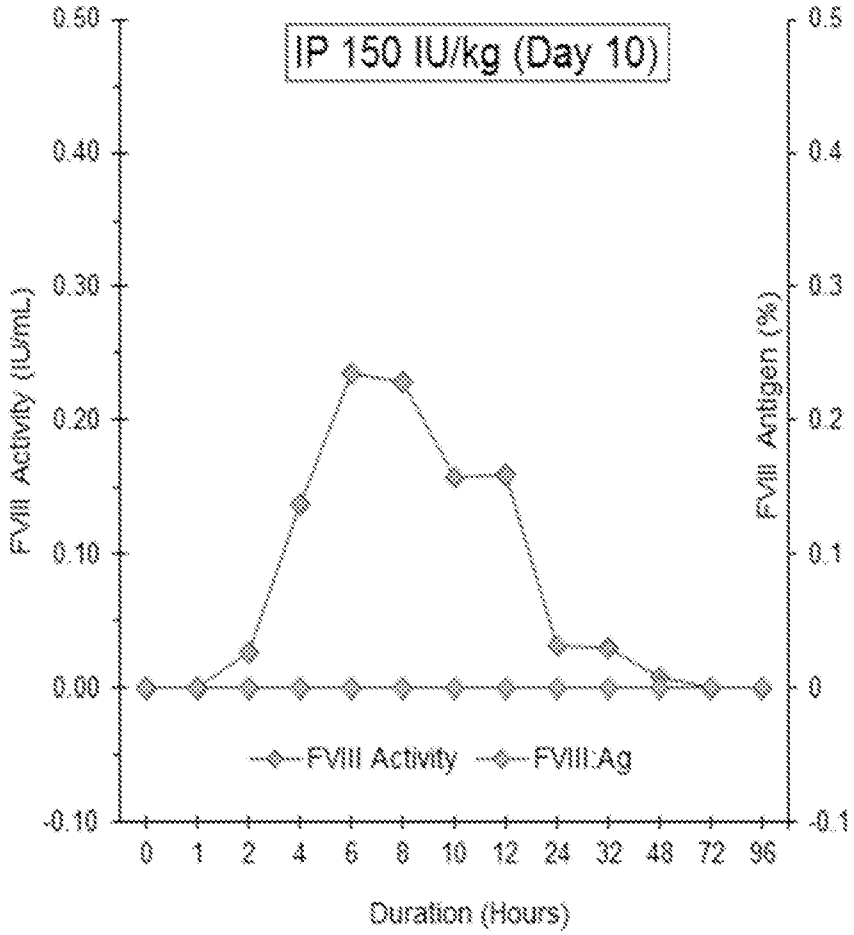
IP 150 IU/kg (Day 10)
FVIII Activity (IU/mL)
FVIII Antigen (%)
0.50
0.40
0.30
0.20
0.10
0.00
-0.10
0.5
0.4
0.3
0.2
0.1
0
-0.1
FVIII Activity
FVIII:Ag
0 1 2 4 6 8 10 12 24 32 48 72 96
Duration (Hours)

FIG. 26B

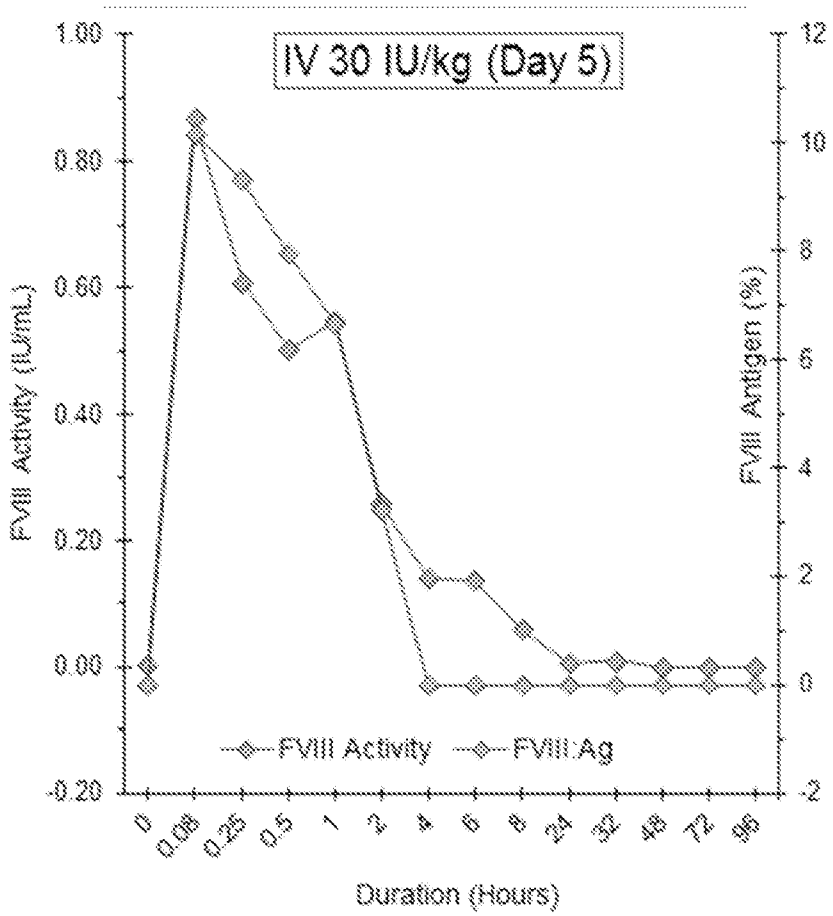
IV 30 IU/kg (Day 5)
FVIII Activity (IU/mL)
FVIII Antigen (%)
1.00
0.80
0.60
0.40
0.20
0.00
-0.20
12
10
8
6
4
2
0
-2
FVIII Activity
FVIII:Ag
Duration (Hours)

FIG. 26C

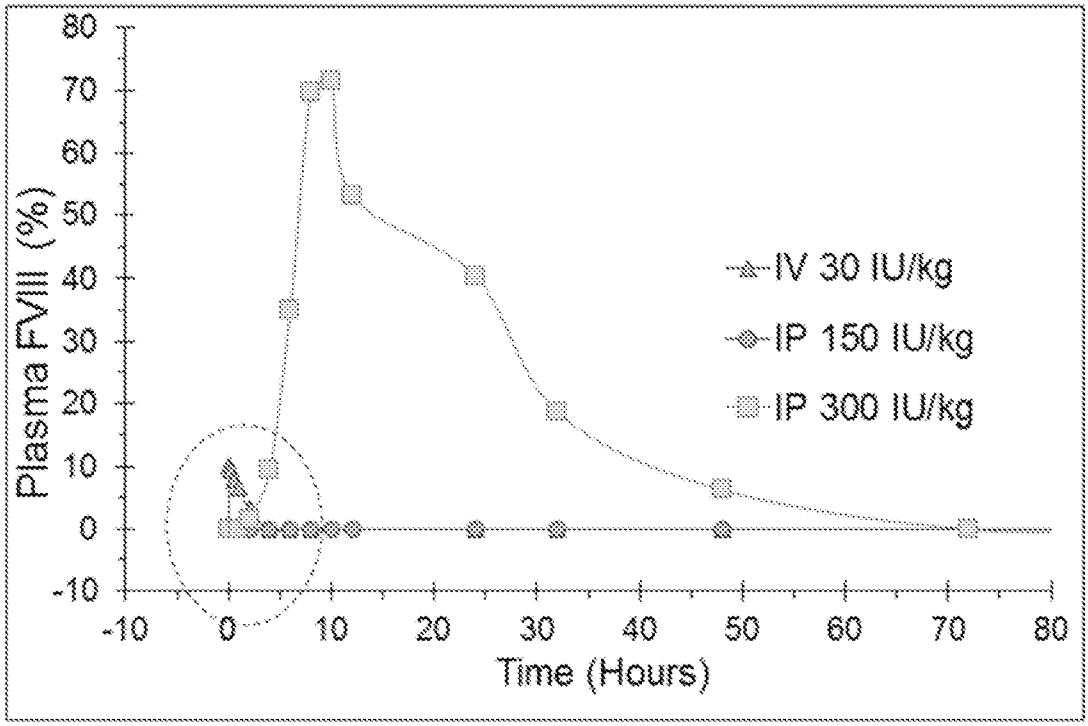
Plasma FVIII (%)
80
70
60
50
40
30
20
10
0
-10
-10
0
10
20
30
40
50
60
70
80
Time (Hours)
IV 30 IU/kg
IP 150 IU/kg
IP 300 IU/kg

FIG. 27A

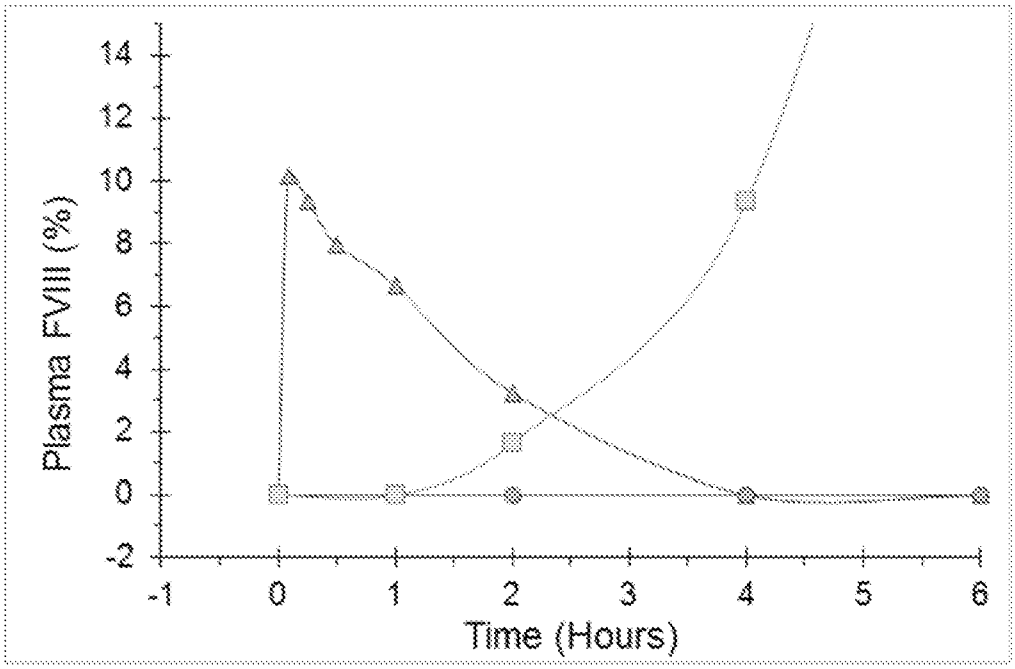

FIG. 27B

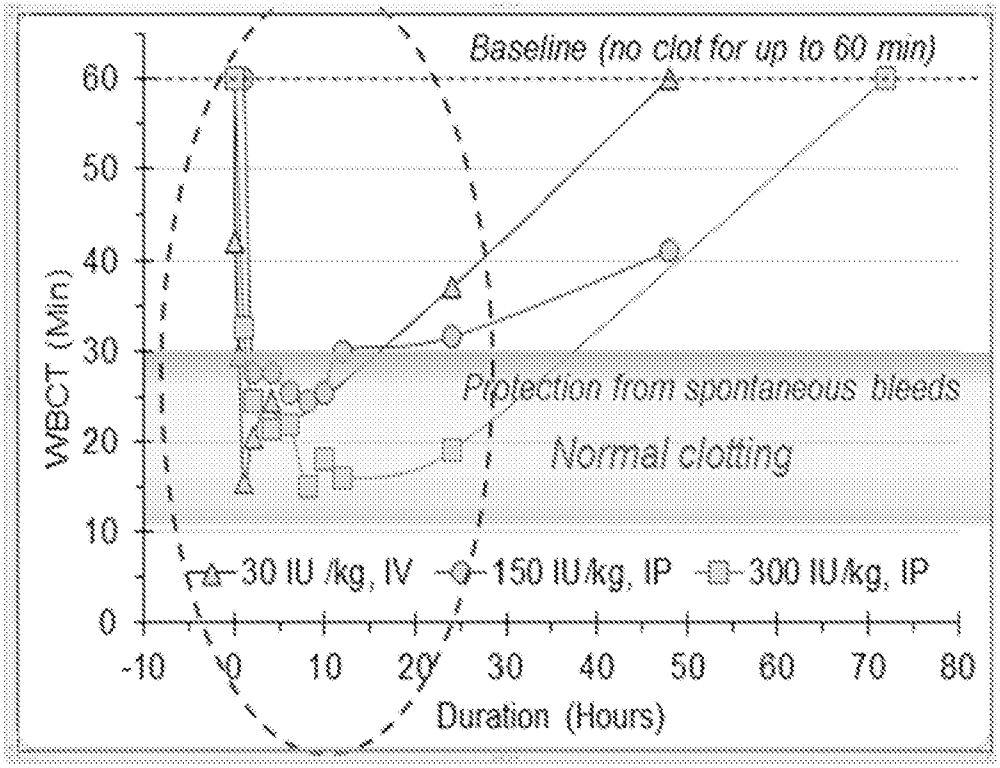
Baseline (no clot for up to 60 min)
Protection from spontaneous bleeds
Normal clotting
WBCT (Min)
60
50
40
30
20
10
0
30 IU /kg, IV
150 IU/kg, IP
300 IU/kg, IP
-10
0
10
20
30
40
50
60
70
80
Duration (Hours)

FIG. 28A

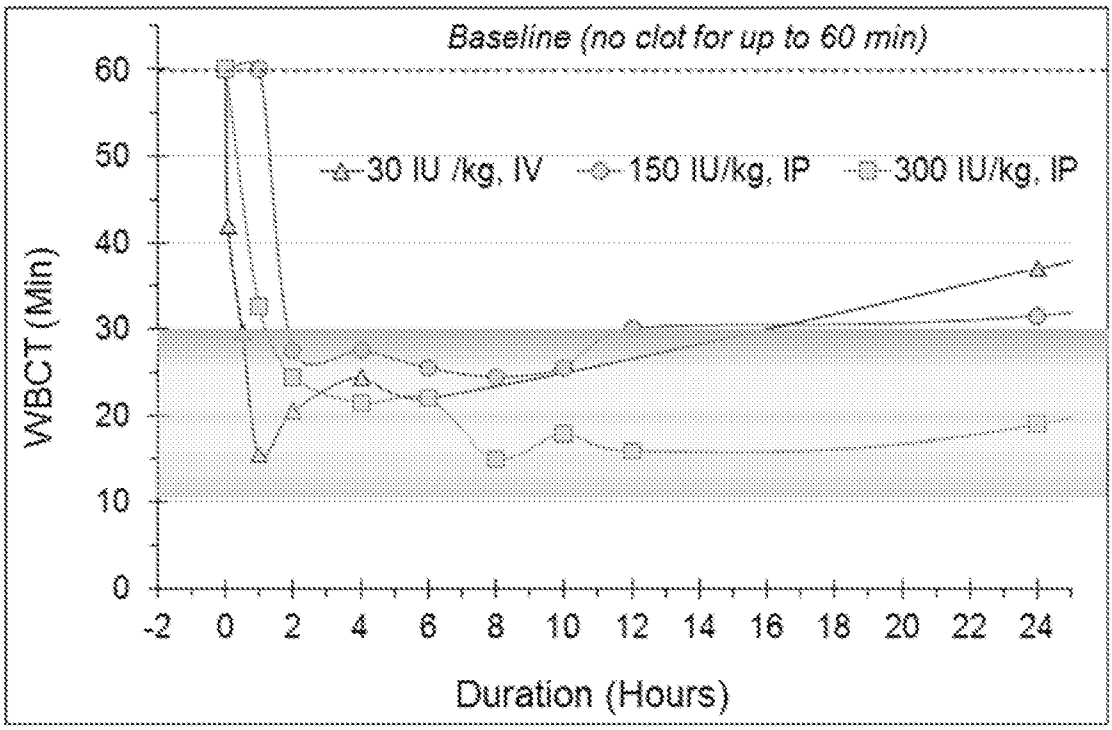
Baseline (no clot for up to 60 min)
30 IU /kg, IV
150 IU/kg, IP
300 IU/kg, IP
WBCT (Min)
60
50
40
30
20
10
0
-2
0
2
4
6
8
10
12
14
16
18
20
22
24
Duration (Hours)

FIG. 28B

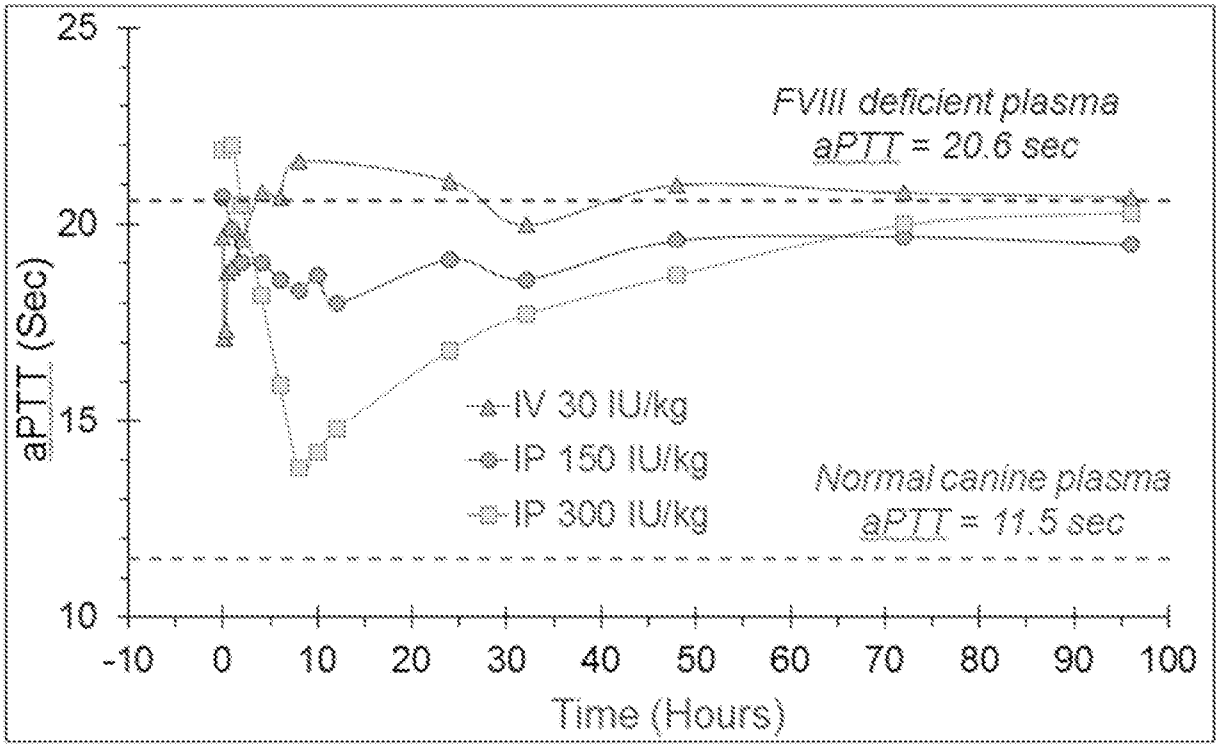
25
20
15
10
aPTT (Sec)
FVIII deficient plasma
aPTT = 20.6 sec
IV 30 IU/kg
IP 150 IU/kg
IP 300 IU/kg
Normal canine plasma
aPTT = 11.5 sec
-10
0
10
20
30
40
50
60
70
80
90
100
Time (Hours)

FIG. 29

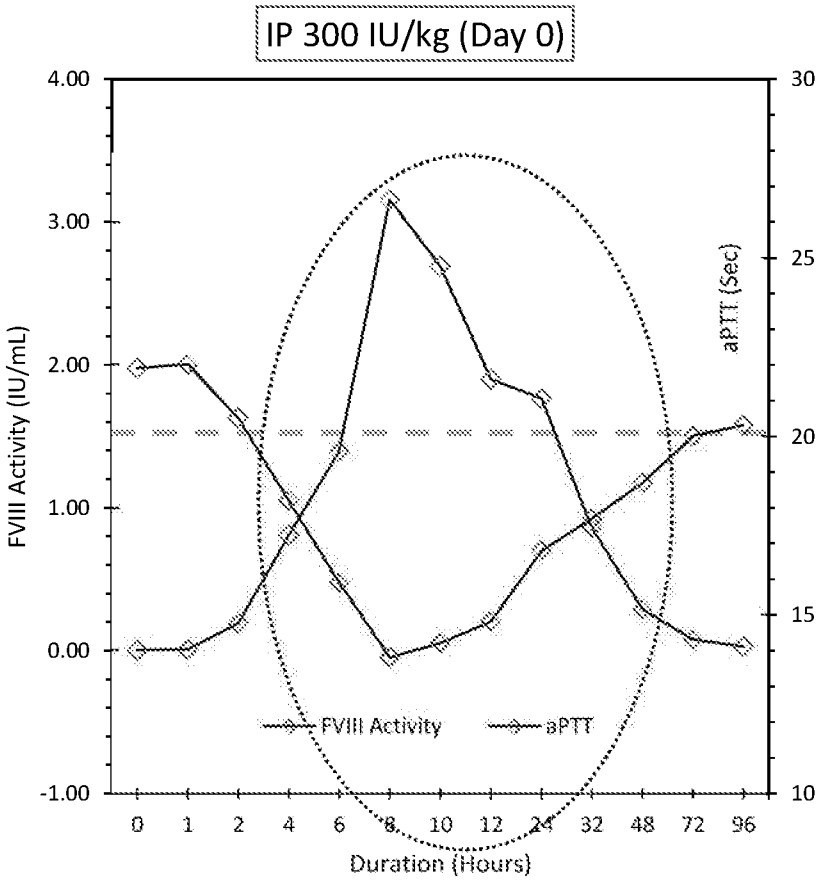
IP 300 IU/kg (Day 0)
4.00
3.00
2.00
1.00
0.00
-1.00
FVIII Activity (IU/mL)
30
25
20
15
10
aPTT (Sec)
FVIII Activity
aPTT
0
1
2
4
6
8
10
12
24
32
48
72
96
Duration (Hours)

FIG. 30A

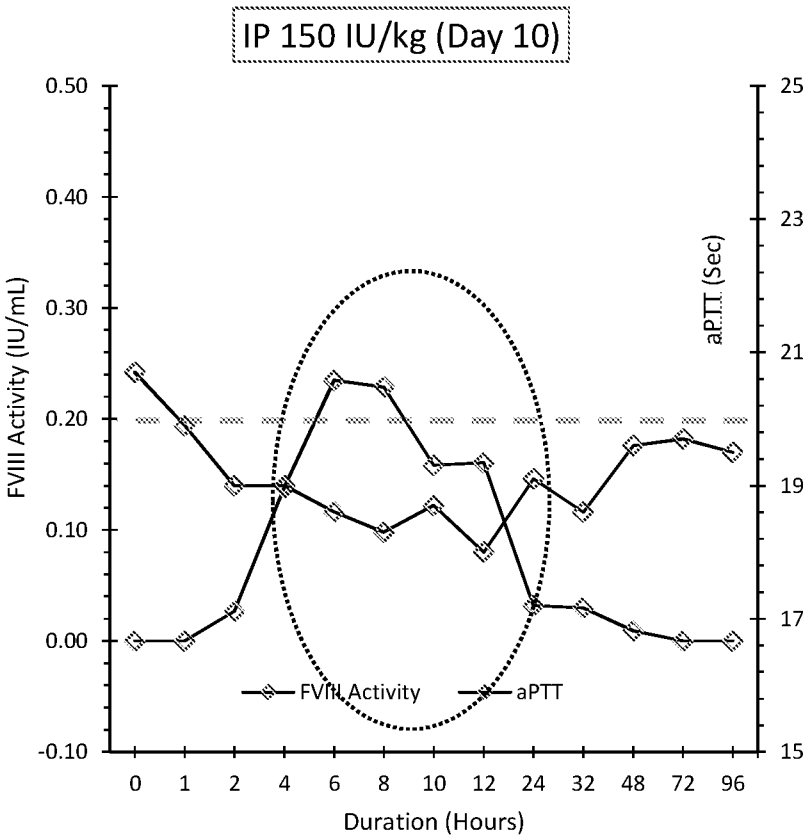
IP 150 IU/kg (Day 10)
FVIII Activity (IU/mL)
aPTT (Sec)
0.50
0.40
0.30
0.20
0.10
0.00
-0.10
25
23
21
19
17
15
FVIII Activity
aPTT
0
1
2
4
6
8
10
12
24
32
48
72
96
Duration (Hours)

FIG. 30B

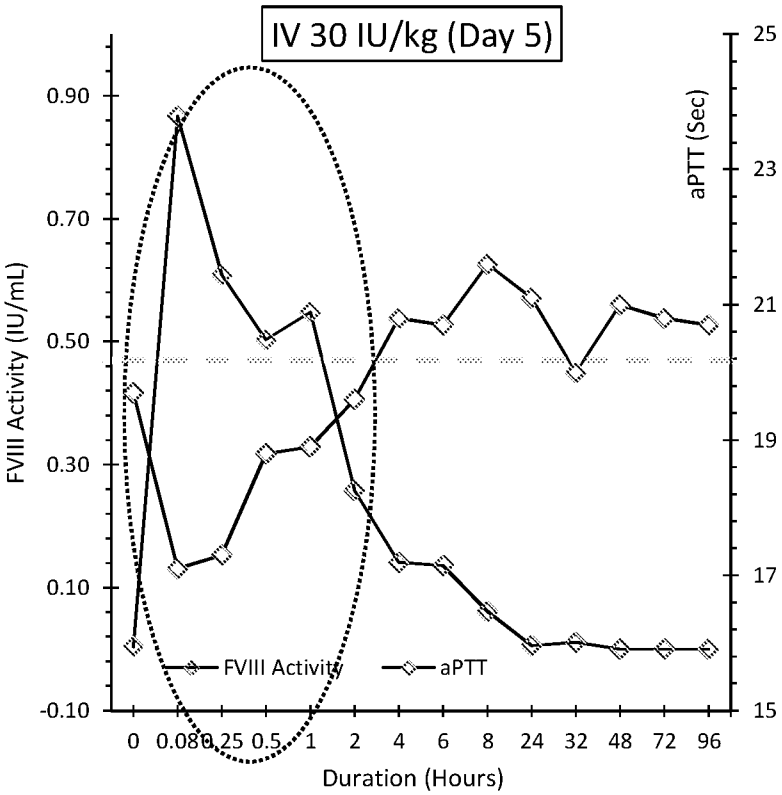
IV 30 IU/kg (Day 5)
FVIII Activity (IU/mL)
aPTT (Sec)
0.90
0.70
0.50
0.30
0.10
-0.10
25
23
21
19
17
15
FVIII Activity
aPTT
0
0.08
0.25
0.5
1
2
4
6
8
24
32
48
72
96
Duration (Hours)

FIG. 30C

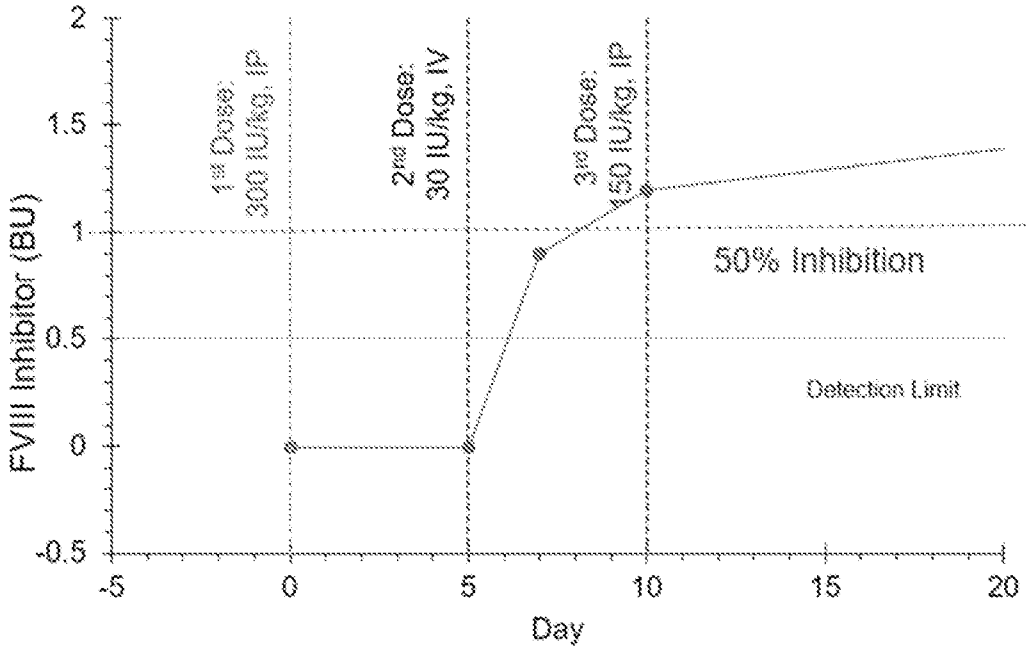
FVIII Inhibitor (BU)
2
1.5
1
0.5
0
-0.5
1st Dose:
300 IU/kg, IP
2nd Dose:
30 IU/kg, IV
3rd Dose:
150 IU/kg, IP
50% Inhibition
Detection Limit
-5
0
5
10
15
20
Day

FIG. 31

INTERNATIONAL SEARCH REPORT

International application No.
PCT/US2020/031197

A. CLASSIFICATION OF SUBJECT MATTER

IPC(8) - A61K 38/37; A61K 9/22; A61K 38/36; A61P 7/04; C07K 14/755 (2020.01)
CPC - A61K 38/37; A61K 9/0024; A61K 9/0065; A61K 38/36; A61P 7/04; C07K 14/755 (2020.05)

According to International Patent Classification (IPC) or to both national classification and IPC

B. FIELDS SEARCHED

Minimum documentation searched (classification system followed by classification symbols)
see Search History document

Documentation searched other than minimum documentation to the extent that such documents are included in the fields searched
see Search History document

Electronic data base consulted during the international search (name of data base and, where practicable, search terms used)
see Search History document

C. DOCUMENTS CONSIDERED TO BE RELEVANT

Category*	Citation of document, with indication, where appropriate, of the relevant passages	Relevant to claim No.
Y	US 2018/0360982 A1 (BIOVERATIV THERAPEUTICS INC) 20 December 2018 (20.12.2018) entire document	1-6, 10-18
Y	US 2017/0051051 A1 (RANI THERAPEUTICS LLC) 23 February 2017 (23.02.2017) entire document	1-6, 10-18
Y	US 2014/0010297 A1 (NOVO NORDISK A/S) 16 January 2014 (16.01.2014) entire document	6, 10, 18
P, X	US 2019/0133937 A1 (RANI THERAPEUTICS LLC) 09 May 2019 (09.05.2019) entire document	1-6, 10-18

☐ Further documents are listed in the continuation of Box C. ☐ See patent family annex.

* Special categories of cited documents:
"A" document defining the general state of the art which is not considered to be of particular relevance
"D" document cited by the applicant in the international application
"E" earlier application or patent but published on or after the international filing date
"L" document which may throw doubts on priority claim(s) or which is cited to establish the publication date of another citation or other special reason (as specified)
"O" document referring to an oral disclosure, use, exhibition or other means
"P" document published prior to the international filing date but later than the priority date claimed
"T" later document published after the international filing date or priority date and not in conflict with the application but cited to understand the principle or theory underlying the invention
"X" document of particular relevance; the claimed invention cannot be considered novel or cannot be considered to involve an inventive step when the document is taken alone
"Y" document of particular relevance; the claimed invention cannot be considered to involve an inventive step when the document is combined with one or more other such documents, such combination being obvious to a person skilled in the art
"&" document member of the same patent family

Date of the actual completion of the international search	Date of mailing of the international search report
24 June 2020	09 JUL 2020
Name and mailing address of the ISA/US Mail Stop PCT, Attn: ISA/US, Commissioner for Patents P.O. Box 1450, Alexandria, VA 22313-1450 Facsimile No. 571-273-8300	Authorized officer Blaine R. Copenheaver Telephone No. PCT Helpdesk: 571-272-4300

INTERNATIONAL SEARCH REPORT

International application No.
PCT/US2020/031197

Box No. II Observations where certain claims were found unsearchable (Continuation of item 2 of first sheet)

This international search report has not been established in respect of certain claims under Article 17(2)(a) for the following reasons:

1. ☐ Claims Nos.:
because they relate to subject matter not required to be searched by this Authority, namely:

2. ☐ Claims Nos.:
because they relate to parts of the international application that do not comply with the prescribed requirements to such an extent that no meaningful international search can be carried out, specifically:

3. ☒ Claims Nos.: 7-9, 19, 20
because they are dependent claims and are not drafted in accordance with the second and third sentences of Rule 6.4(a).

Box No. III Observations where unity of invention is lacking (Continuation of item 3 of first sheet)

This International Searching Authority found multiple inventions in this international application, as follows:

1. ☐ As all required additional search fees were timely paid by the applicant, this international search report covers all searchable claims.

2. ☐ As all searchable claims could be searched without effort justifying additional fees, this Authority did not invite payment of additional fees.

3. ☐ As only some of the required additional search fees were timely paid by the applicant, this international search report covers only those claims for which fees were paid, specifically claims Nos.:

4. ☐ No required additional search fees were timely paid by the applicant. Consequently, this international search report is restricted to the invention first mentioned in the claims; it is covered by claims Nos.:

Remark on Protest

☐ The additional search fees were accompanied by the applicant's protest and, where applicable, the payment of a protest fee.

☐ The additional search fees were accompanied by the applicant's protest but the applicable protest fee was not paid within the time limit specified in the invitation.

☐ No protest accompanied the payment of additional search fees.