June 30, 1931. M. E. POPKIN 1,812,368

CLOTH MATCHING MACHINE

Original Filed Dec. 8, 1927 3 Sheets-Sheet 1

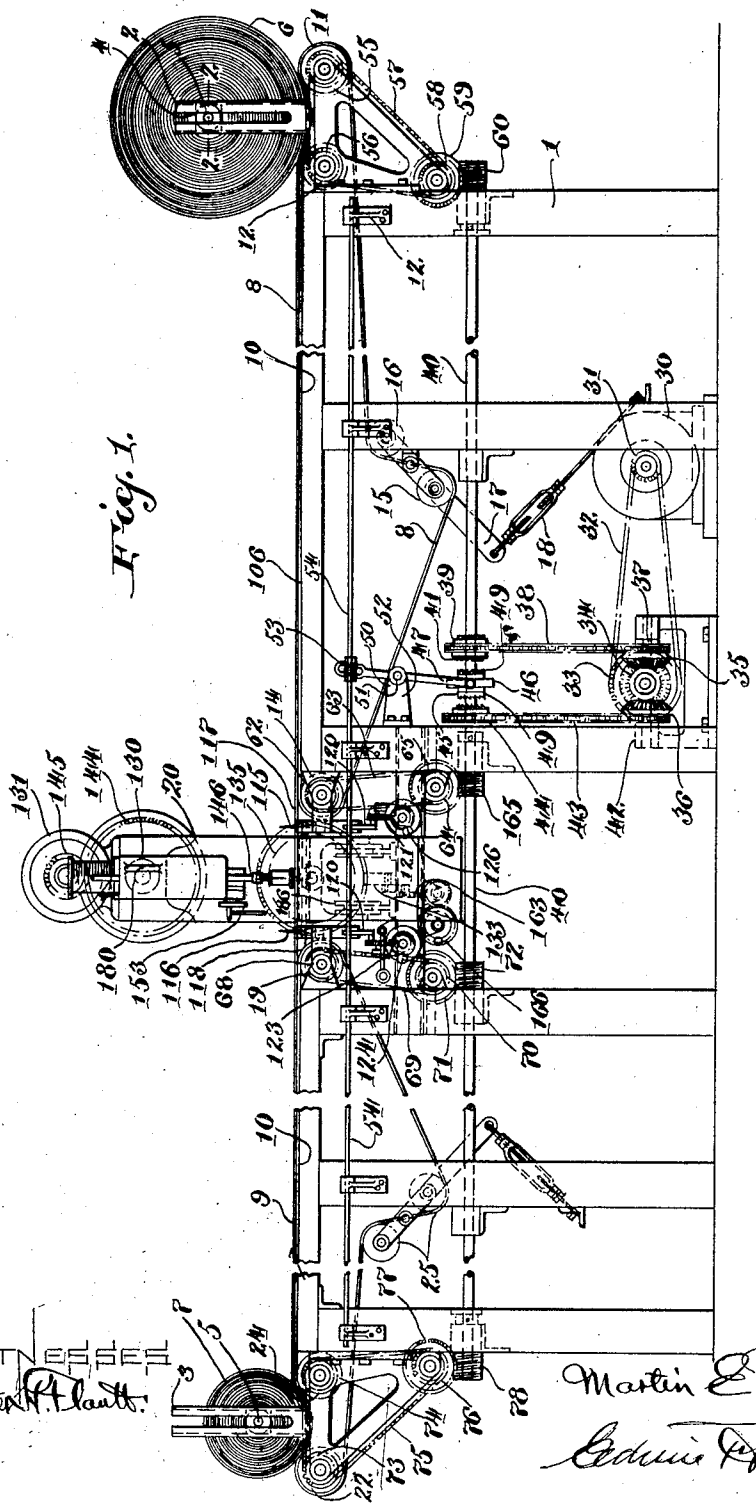

Fig. 1.

Witnesses
Porter H. Flautt.

Inventor
Martin E. Popkin
Edwin F. Hammels
Attorney

June 30, 1931. M. E. POPKIN 1,812,368

CLOTH MATCHING MACHINE

Original Filed Dec. 8, 1927 3 Sheets-Sheet 2

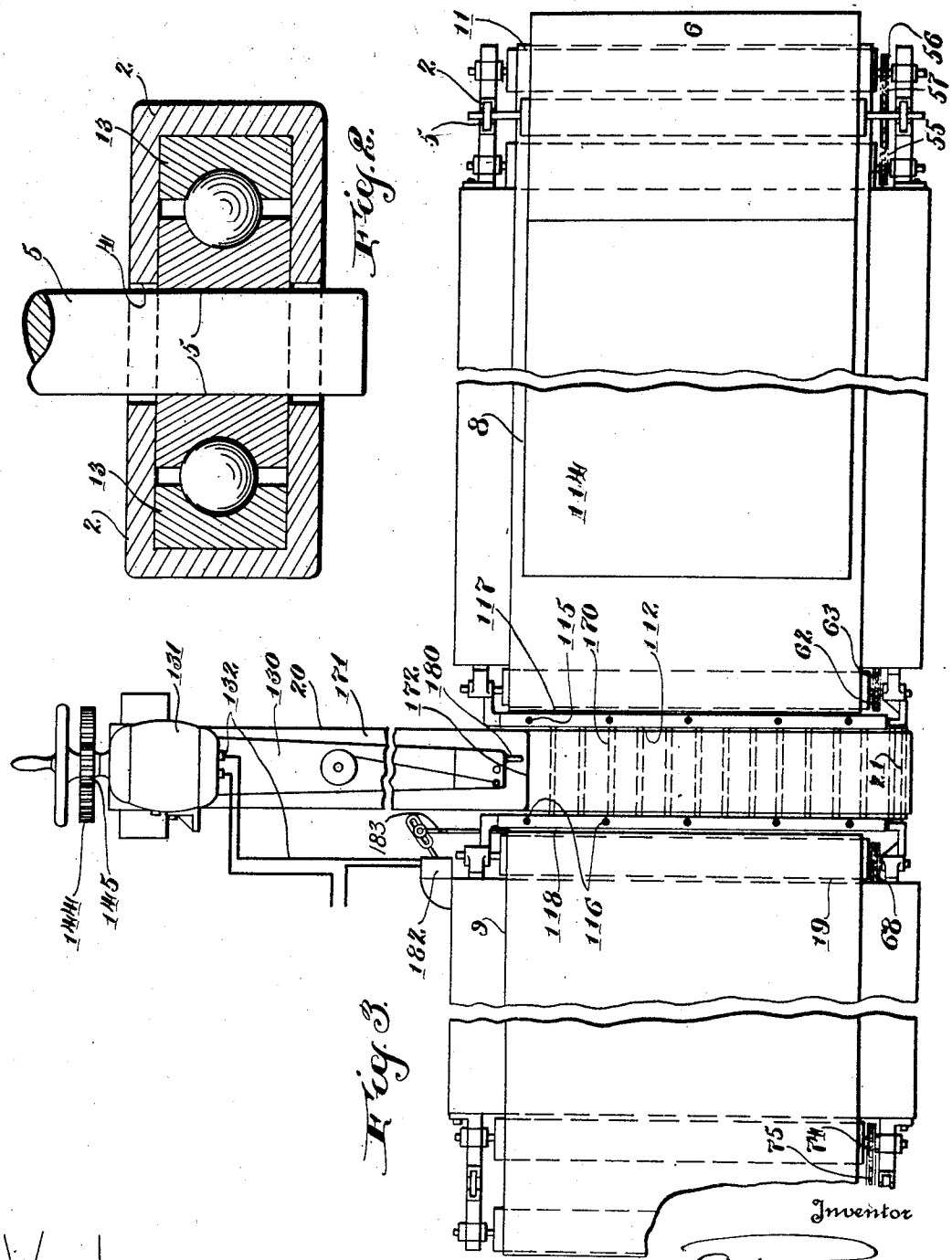

Witnesses
Porter H. Hewitt.

Inventor
Martin E. Popkin
By Edwin Hammond
Attorney

June 30, 1931. M. E. POPKIN 1,812,368

CLOTH MATCHING MACHINE

Original Filed Dec. 8, 1927 3 Sheets-Sheet 3

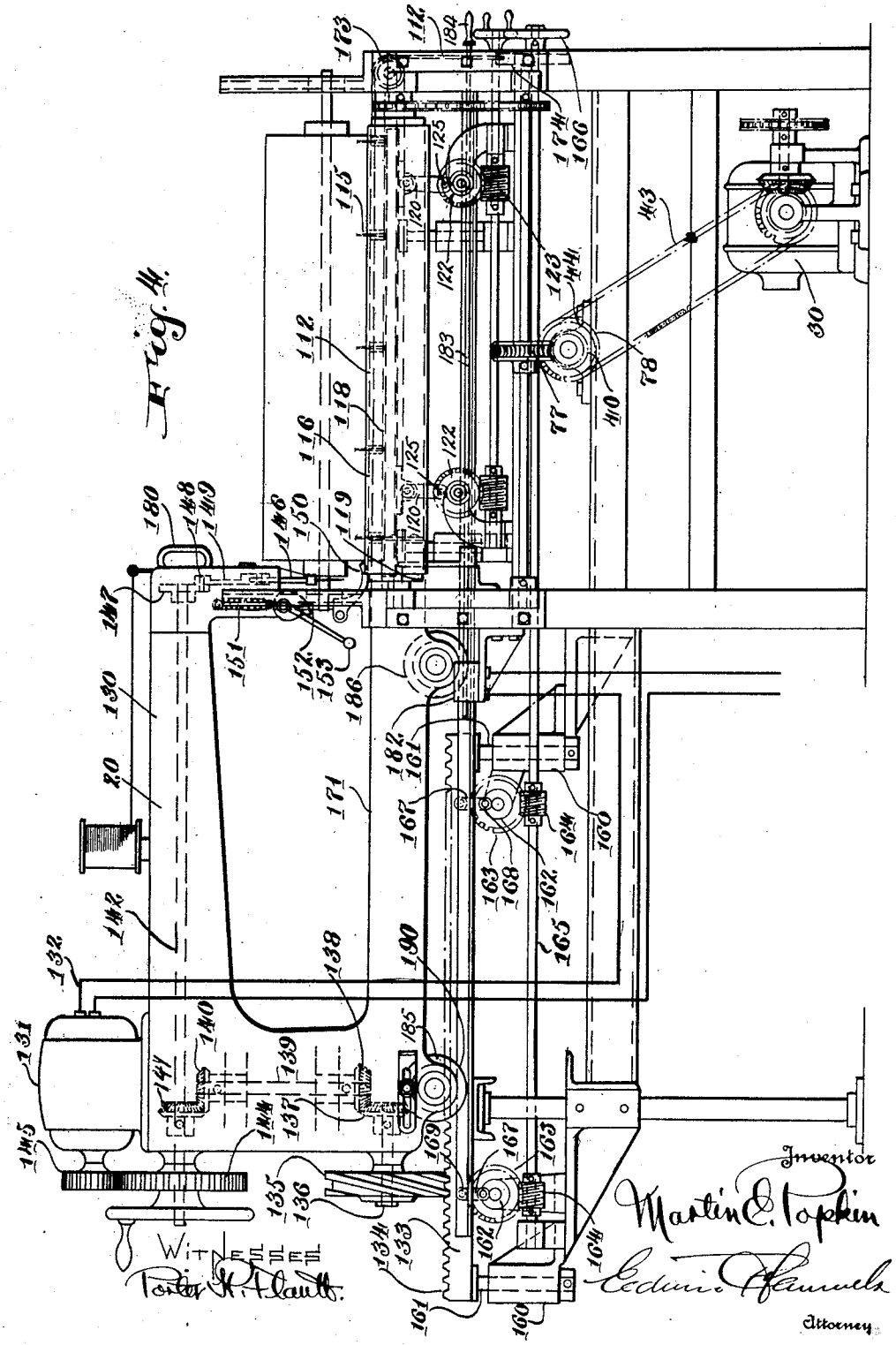

Patented June 30, 1931 1,812,368

UNITED STATES PATENT OFFICE

MARTIN E. POPKIN, OF NEW YORK, N. Y.

CLOTH MATCHING MACHINE

Original application filed December 8, 1927, Serial No. 238,711. Divided and this application filed July 5, 1929. Serial No. 376,258.

This application is a division of my copending application, S. N. 238,711, filed December 8, 1927.

The invention relates to a matching device whereby a plurality of layers of fabric are secured at intervals with the pattern in registration so that the fabric may be rolled and stored in this way after sponging, being ready for instant use in the manufacture of garments, it being understood that the invention throughout relates particularly to the matching and measurement of fabric in the manufacture of tailored garments.

In the accompanying drawings I have illustrated a cloth measuring and matching machine embodying the features of my invention in the preferred form.

In the drawings:

Figure 1 is a side elevation of the machine.

Figure 2 is a section on the line 2—2 of Figure 1.

Figure 3 is a top plan.

Figure 4 is an end view of the machine looking from the left in Figure 1.

Referring to the drawings by numerals, each of which is used to indicate the same or similar parts in the different figures, the machine, as shown, comprises a table or bench or frame 1 provided at each end with a pair of uprights 2, 3, each of which is slotted vertically at 4 to admit roll shaft 5. The cross section of each upright is in the form of a hollow rectangle to receive ball bearings 13 for the respective ends of the pole or shaft 5 of the cloth rolls 6 and 7, respectively. The cloth rolls are supported from beneath and the roll shaft 5 is mounted at each end in a ball bearing 13, see Figure 2, which slides vertically, as shown, in channeled uprights 2, 3, and the shaft 5 is, therefore, free to rotate and move up and down as the size of the roll is increased or decreased.

In the form of the invention shown, the rolls 6 and 7 respectively are supported on the outer end portions of cloth feed belts 8 and 9, to be described. These belts are supported between the rolls 6, 7, on the top 10 of the table or bench 1, the portion of the belt 8 beneath and engaged by the cloth roll 6 is directly supported on rollers or pulleys 11 and 12 which extend the full width of the belt, the pulley 11 being the end pulley about which the belt is turned. The belt 8 is passed at the other end of its traverse over still another drive pulley 14 near the center of the table, all three of the pulleys 11, 12 and 14 having their upper elements substantially in line with the upper surface of the table top 10, which is preferably nearly tangent to the pulleys or rollers, 11, 12, etc. The belt 8 is tightened by suitable tension pulleys 15 and 16 controlled in any suitable manner by belt tightening lever 17 and turnbuckle 18, this mechanism being of the regular commercial type and not material to the invention.

The second feed belt 9 is supported and driven at the end of its traverse near the center of the table by means of a pulley 19 having its top surface near the top of the table and spaced away from the pulley 14 supporting the adjacent end of the belt 8 to provide for the sewing machine 20 and sewing apron 21. The second feed belt 9 is supported at the other end of its traverse and driven by a pulley 22 at the extreme left of the machine in Figure 1. This pulley also assists in the support of the cloth roll 7 at this end, the cloth roll and belt 9 being further supported and driven by a pulley 24 spaced slightly to the right in Figure 1 from the pulley 22 and located beneath the cloth roll 7 at the right of the center.

The belt 9 is also shown as provided with belt tightening mechanism 25 similar to that described in connection with the first feed belt 8 and indicated by reference characters 16, 17 and 18, etc.

The feed belts 8 and 9 are, in accordance with the operation of the machine shown, fed simultaneously in the same direction, the machine being capable of feeding both belts in either direction, by means of a motor 30 shown as mounted beneath the table. This motor is provided with a toothed sprocket or pulley 31 mounted on the motor shaft which drives a chain 32 which, in turn, engages and drives a sprocket 33 which carries on its

shaft or secured thereto, a bevel gear 34 engaging opposed bevel pinions 35 and 36 which are driven thereby in opposite rotation. The pinion 35 carries a sprocket 37 which drives a chain 38 which, in turn, engages and drives a sprocket 39 rotating freely on a longitudinal shaft 40 mounted in suitable bearings in the frame of the machine and extending the entire length of the machine. This sprocket 39 carries on one face, this being the face turned to the left in Figure 1 as shown, any suitable jaw clutch teeth 41.

The other bevel gear 36 in turn carries secured thereto a sprocket 42 which drives a chain 43 engaging a sprocket 44 which is preferably of the same size as the sprocket 39, the sprocket 44 being also mounted to rotate freely on the shaft 40 and being spaced away from the sprocket 39 to the left, in the form of the invention shown, by a few inches providing for the clutch throw. This sprocket 44 is provided with teeth 45 on its right hand face. Between the sprockets 44 and 39 is a clutch member 46 keyed to the shaft to slide thereon and to rotate the shaft. The clutch member 46 is carried by a jaw 47 and is provided on its opposite faces with clutch teeth 49 adapted to engage and cooperate with the clutch teeth 41 and 45 in its respective operative positions. The clutch member 46 also has a neutral position in which it is out of engagement with both sets of teeth 49 on the respective continuously rotating sprockets 39 and 44.

The jaw 47 is shown as carried by a rocking lever or arm 50 pivoted at 51 on a bracket 52 on the machine frame, the end of the lever on the opposite side of the center 51 of the jaw 47 being connected at 53 to a controller cord or wire 54.

In accordance with the preferred form of the invention illustrated, the feed belts 8 and 9 are driven at their ends near the center of the table by pulleys 14 and 19 and at their ends remote from the center of the table, i. e., at the right and left beneath the cloth rolls 6 and 7, to prevent slipping of the belts they are preferably provided with two drive pulleys at each end of the table, which pulleys support the feed belt beneath the cloth rolls 6 and 7, the pulleys at the right end of the table being indicated, in accordance with the invention shown, by reference characters 11 and 12 and at the left end of the table by reference characters 22 and 24. These rollers or pulleys as they are described, 11, 12, 22, 24, not only support the cloth rolls 6, 7, but enable the cloth to be fed from the rolls at the speed of the corresponding belts 8, 9.

The pulleys 11 and 12 at the right, in the form of the invention shown, are provided each with sprockets 55 and 56, respectively, secured to the pulleys and engaged and driven by a chain 57 which is, in turn, driven by a sprocket 58 mounted on or secured to worm wheel or gear 59 engaged and driven by a worm 60 on the shaft 40.

The pulley 14 which drives the end of the belt 8 opposite the pulley 11, carries secured thereto a sprocket 62 which is engaged and driven by a chain 63 which is, in turn, engaged and driven by a sprocket 64 mounted on or secured to the shaft of a worm wheel 65 which is, in turn, engaged and driven by a worm 66 on the shaft 40.

The second feed belt 9 is driven in a manner precisely similar to the manner of driving the belt 8. In the form of the invention shown, the drive pulley 19 at the end of the traverse of the feed belt 9 near the center of the machine is provided with a sprocket 68 secured thereto or to the shaft of the pulley 19. This sprocket is engaged and driven by a chain 69 which is, in turn, driven by a sprocket 70 rigidly connected to a worm wheel 71 which is engaged and driven by a worm 72 mounted on and secured to the shaft 40. The pulleys 22 and 24 at the left end of the machine which are located beneath the cloth roll 7 at this end are each provided at one end with a toothed sprocket 73 and 74 respectively, the sprockets being secured to the respective pulleys to rotate therewith and drive the pulleys. The sprockets 73 and 74 are engaged by a chain 75 which is, in turn, engaged and driven by a sprocket 76 secured to a worm wheel 77 to rotate therewith, the worm wheel 77 being, in turn, engaged and driven by a worm 78 on the shaft 40.

In the form of the invention shown, there are, as aforesaid, two feed belts 8 and 9 spaced apart at the center to provide for the operation of the sewing machine 20, as hereinafter described. To support the material between the belts 8 and 9 suitable supporting means is provided, the same being movable with the machine and, in the form of the invention shown, being in the form of a sewing machine apron 112 to be more particularly described.

The machine is also adapted for use in matching a plurality of layers of cloth, the cloth being fed from the roll 6 to the roll 7 by means of feed belts 8, 9, running over the table 10, as already described. In this connection it should be understood that the matching operation consists in so assembling a plurality of layers of cloth so as to bring the corresponding portions of the figure or pattern on the respective layers into registration and securing the respective layers of cloth together in this relative position by sewing or otherwise at suitable intervals. To this end the machine, in the form shown, is provided with cloth holding means 115 and 116 extending transversely of the machine, preferably at right angles to the feed

for the full width of the path of material or fabric, the said securing means 115 and 116 respectively being placed immediately adjacent the end of the corresponding belt and on each side of the apron 112.

In the form of the invention shown, the cloth holding means consists in each instance of a series of needles or pins 115, 116, each series being arranged in a line extending across the path of the material, as aforesaid, the needles being upright or substantially upright with the points uppermost. While this type of cloth holding means has been used in the machine as developed, other cloth holding means may be substituted.

The lines of cloth holding pins or needles 115, 116 are mounted each line on transverse bars 117, 118, respectively, supported on the machine or table in any suitable manner, whereby they may be conveniently moved into and out of operative position.

In the form of the invention shown, these bars 117, 118, see particularly Figure 4, are mounted in suitable guides 119 to move up and down in a vertical direction, the bars being actuated by means of links or connecting rods 120 pivotally connected at one end to the crank disks 121 and at the other end to the bars 117, 118. The crank disks, in turn, may be secured to worm gears 122 driven by worms 123, which may be rotated in any suitable manner as by means of hand cranks 124 and 126. A half turn of the disks 121 moves the crank pins 125 from the top position, in which they are shown, and in which the pins are raised in operative position to the bottom position in which they are withdrawn, and vice versa.

The matching mechanism also includes a sewing machine 20, already referred to, which sewing machine is mounted to move transversely of the table between the adjacent ends of the feed belts 8 and 9, the apron 112 already referred to being connected to the machine to move into and out of supporting position taking the place of the machine table, as the latter is advanced and retracted, as hereinafter described.

The sewing machine is most conveniently actuated by means of an electric motor 131 mounted on the machine to move therewith, as hereinafter described, the motor being connected by a flexible cable 132 to any suitable source of electricity, not shown. To move the sewing machine or cloth fastening head back and forth transversely of the table to fasten the cloth in matched relation, as already outlined, a toothed rack 133 is provided at the side of the table and directly beneath the path of the fastening head or sewing machine, the rack extending to the left in Figure 4 a little beyond the position of the machine as illustrated. This rack, which is preferably provided with skew or inclined teeth 134, is engaged by a skew gear mounted on the sewing machine on an axis parallel to the rack, though the exact details of this device for feeding the cloth fastening head or sewing machine are not essential to the invention. The skew gear 135 is carried by a shaft 136 which is driven by means of bevel gears 137 on the shaft 136, and 138 on an upright shaft 139, which carries at its upper end a bevel gear 140 which meshes with a bevel gear 141 on the needle shaft 142 in the arm 130 of the sewing machine, which needle shaft, in the form of the invention shown, is driven by a toothed gear 144 engaged by a pinion 145 on the motor shaft. The needle shaft 142 drives the sewing machine needle bar 146 in any suitable manner as by means of crank disk 147 having a crank pin 148 connected by a link 149 to the needle bar 146.

The presser foot 150, being actuated in the usual manner by a spring 151 which presses it downwardly on the cloth, is raised to inoperative position by means of a cam 152 controlled by a cam lever 153 which is swung upwardly to raise the presser foot and rotated in the opposite direction to permit the presser foot to move downwardly in response to the action of the spring 151.

In order that the sewing machine 20 may be moved manually and independently of the machine drive, into and out of operative relation to the table as hereinafter described, the rack 133 is mounted to move vertically, the table having vertical guides 160 suitably supported on the table frame and the rack 133 being provided, in turn, with vertical followers 161, which slide in the guides and the rack 133 is moved up and down into and out of operative relation with the gear 135 by the following mechanism, consisting of rotary crank disks 162 provided with worm gear teeth 163 engaged by worms 164 on the worm shaft 165. The shaft 165 is actuated at the will of the operator by means of a hand wheel 166 at the right in Figure 4. The disks 162 actuate connecting rods or links 167 pivotally connected to the rack 133 at 169 and to eccentric wrist pins 168 on the disks 162.

In the operation of this mechanism the rack is moved up and down by the rotation of the hand wheel 166 rotating the crank disks 162 back and forth through an arc of 182 degrees or less, depending upon the throw of the crank pins and the distance through which it is found desirable to move the rack.

To support the cloth when the cloth fastening head or sewing machine is withdrawn, as illustrated in Figure 4, the apron 112 has been provided. This apron may be in the form of a strip of canvas or equivalent material which may be stiffened by battens 170 spaced laterally of the machine and extending in the direction of the feed,

secured to the canvas in any suitable manner. This apron, in the form of the invention shown, is secured at one end to the forward end of the cloth fastening head or sewing machine table 171 at 172, see Figure 4, the apron being passed to the right in Figure 4 between the ends of the belts 8 and 9 as illustrated in Figure 3, and let over a roller 173, see Figure 4, mounted in suitable bearings on the table, the end of the apron being drawn downwardly by means of a weight 174 secured thereto, or any equivalent means whereby the apron is held sufficiently taut to support the material between the belts 8 and 9. The apron is thus held flat and caused to close the table 10 between belts 8 and 9, passing downwardly over pulley 173 as the sewing machine advances.

Though the machine may be used in matching several thicknesses of cloth, its most frequent use is probably in matching the two thicknesses of a single piece of double width material. For this purpose the cloth holding means, i. e., needles 116, on the side of the sewing machine remote from the cloth roll from which the cloth is being fed, are first raised as by rotating the hand crank 124, bringing them to the position shown in Figure 1, or the needles may be raised after the cloth has been placed in matching position and relation, as hereinafter described, the cloth being held for this purpose.

Assuming that the needles have been raised in operative position, as already suggested, the double width cloth, folded once upon itself, being supplied from the roll 6, is drawn forwardly over the table and the lower thickness of the cloth being spread smoothly on the table is pressed down on needles 116, which serve to hold it in position fully extended and flat on the table. The forward end of the cloth is at this time slightly forward of the needles 116 and the cloth fastening head or sewing machine 20 is withdrawn, the apron 112 being advanced as shown most clearly in Figure 3. The lower thickness or layer of cloth is thus extended and fastened, it being understood that the cloth is folded laterally forming a longitudinal crease substantially in the lateral center, the fold being partly opened so the lower thickness can be manipulated in the manner just described. The top thickness or layer is then folded over and laid on the bottom thickness and pressed down on the needles, the longitudinal fold being, if necessary, slightly displaced to match the figure or stripe, i. e., to bring it into registration. The cloth may be then held in position and needles 115 raised by turning crank 126, the cloth being, if necessary, pressed down about the needles. The two thicknesses of cloth are thus held in matched relation in the path of the sewing machine 20 by the pins or needles 115, 116. At this time the sewing machine 20 is assumed to be withdrawn to the left in Figure 4 to the extreme position a little further from the table than the position illustrated. At this time the rack 133 is lowered by operation of the hand crank 166 which rotates the disks 162 by way of the worms 164, drawing the links 167 connected to the rack downwardly, the rack being guided, as aforesaid, by followers 161 and the guides 160.

The machine being in the left hand position described, the presser foot 150 would, if the machine has just been withdrawn from operation, ordinarily be already in raised position, otherwise, it is raised by operation of the hand lever 153, the same being thrown to elevated position. The sewing machine is then moved to the right in Figure 5, the material being held, if necessary, by hand in addition to the needles. In moving the machine the handle 180 is grasped by the hand of the operator and it is drawn forward or to the right in Figure 4, until the presser foot 150 comes over the edge of the material, which is held in proper position under the presser foot by the operator who would then release the presser foot by lowering the hand lever 153, rotating the cam 152 to the position shown, in which position the presser foot is moved downwardly by the spring 151 in accordance with the regular operation of this device.

The rack 133 is then raised into mesh with the skew gear 135, the hand crank 166 being turned ordinarily in the opposite direction about half a revolution for this purpose. The motor 131 is then placed in circuit by closing the switch 182, the same being controlled by a sliding rod 183 having a handle 184 at the front of the machine. The motor 131 not only operates the sewing machine but feeds it forwardly at a speed proportionate to the speed of the needle, the feed of the machine being through the connections 140, 139, 138, 137, as already described, to the shaft 136 of the skew gear 135 which engages the rack 133.

The machine moves in this way directly across the web of cloth, sewing the plurality of thicknesses held by the pins 115, 116 together, a line of stitches or any suitable fastening means being formed betwen the pins. As the sewing machine moves forwardly, i. e. to the right, Figure 4, the apron 112 moves in the same direction, being held flat and drawn downwardly at the front of the machine by the weight 174 which passes over the roller 173. When the machine reaches its forward position, the switch 182 is operated automatically by a dog 190 depending from the frame of the sewing machine. In this connection it may be noted

that the machine is, in the form of the invention shown, carried on rollers 185, 186, moving on ways 187.

By the means described the machine and the feed are stopped automatically when a line of stitching has been placed transversely of the material between the needles. The presser foot is then raised by engagement of the hand with the lever 153, the rack 133 is lowered, as aforesaid, and the machine is returned to initial position manually by engagement of the handle 180. The cloth is then moved forwardly for a suitable interval and matched as already described, the various layers being secured in matched relation by the pins or needles 115, 116, and the sewing operation is again performed. When the forward end of the material can be wrapped around the shaft 5, the material may be fed by taking up on roll 7 and letting off from roll 6.

I have thus described specifically and in detail a machine embodying the cloth matching means of the invention in order that the construction and manner of operating the same may be clearly understood, however, the specific terms herein being used descriptively rather than in a limiting sense, the scope of the invention being defined in the claims.

What I claim as new and desire to secure by Letters Patent is:

1. The combination in a cloth matching machine of a support for a web of cloth, means for temporarily securing layers of cloth in matched relation and a cloth fastening head mounted to move transversely of said support, means for moving the head, said head moving means being adapted to be released to permit the head to be moved independently of the operating means, electrical means for driving said head and a stop for automatically disconnecting the electrical drive at the end of the traverse, said means for driving the head and said means for moving the head being connected together to operate synchronously.

2. In a cloth matching and marking machine, a support for a web of cloth, two lines of needles spaced apart and arranged across the support to secure a plurality of layers of cloth in matched relation, a cloth fastening head adapted to move transversely of the support, the support being discontinued in the path of the head and an apron connected to the head to close the path of the head as it is withdrawn from the support, the path of said support being between said lines of needles.

3. In a clotch matching and marking machine, a support for a web of cloth, two lines of needles spaced apart and arranged across the support to secure a plurality of layers of cloth in matched relation, a cloth fastening head adapted to move transversely of the support, the support being discontinued in the path of the head and an apron connected to the head to close the path of the head as it is withdrawn from the support, the path of said support being between said lines of needles, and means for raising and lowering the needles.

4. A cloth matching machine comprising a support for a plurality of layers of cloth, means for temporarily securing said layers in matched relation, said means being arranged transversely of the support and spaced apart to provide for the admission of a cloth fastening head, a cloth fastening head with means for operating the same and means connected thereto for moving it transversely of the support, means for connecting and disconnecting said moving means so that the head can be moved by hand, means for operating said temporary holding means and operating means for both said latter means on the side of the support remote from the fastening head when withdrawn.

5. A cloth matching machine comprising a support for a plurality of layers of cloth, means for temporarily securing said layers in matched relation, said means being arranged transversely of the support and spaced apart to provide for the admission of a cloth fastening head, said support being discontinued between said temporary fastening means, a cloth fastening head with means for operating the same, and means connected thereto for moving it transversely of the support, means for disconnecting said moving means so that the head can be moved by hand and means for operating said temporary holding means and actuating means for both said latter means on the side of the support remote from the fastening head when withdrawn, a moving support connected to the fastening head to move therewith and occupying said space between the temporary fastening means when the fastening head is withdrawn.

6. In a cloth measuring and matching machine, two endless conveyors, means for supporting the upper traverse of said conveyors, said conveyors being substantially in alignment and placed end to end and spaced apart at their adjacent ends to admit a cloth fastening head, a fastening head and means supporting the same to move transversely of the conveyors between the adjacent ends of the conveyors, means adjacent the fastening head for temporarily securing a plurality of layers of cloth in matched relation and means for driving the fastening head in the fastening operation.

7. A cloth measuring and matching machine comprising an endless conveyor, means for feeding cloth to the conveyor and means at the end of the conveyor traverse, opposite to the feeding means, for temporarily secur-

ing a plurality of layers of cloth in matched relation, a cloth fastening head adjacent said securing means, operating means for said head and means for feeding the head transversely of the conveyor, said feeding means being connected to said operating means to move the head proportionately to the rate of fastening.

8. In a cloth matching machine, a support for a web of cloth, means adjacent the support for securing a plurality of layers of cloth on said support in matched relation, a fastening head, means connected to the fastening mechanism of the head for feeding the head transversely of the support to fasten the cloth together in matched relation as it is held by said holding means, an electric motor mounted on the head for operating the fastening mechanism and feeding means, a switch controlling said motor and means for automatically disengaging the switch when the head has reached the end of its stitching traverse, and means for disengaging the moving means permitting the head to be returned.

9. In a cloth matching machine, spaced supports for the cloth, means adjacent the space for temporarily holding the cloth in matched relation, a cloth fastening head mounted to move transversely of the supports and to operate in the space between the supports, means supporting the head permitting it to move transversely of the supports and means connected to the head to move in advance of the head for supporting the cloth between said spaced supports.

Signed by me at New York, New York, this 14 day of June, 1929.

MARTIN E. POPKIN.