March 3, 1964 G. S. P. FREEMAN 3,123,733

ROTARY ANODE CATHODE RAY TUBE

Filed Feb. 27, 1961

FIG. 1

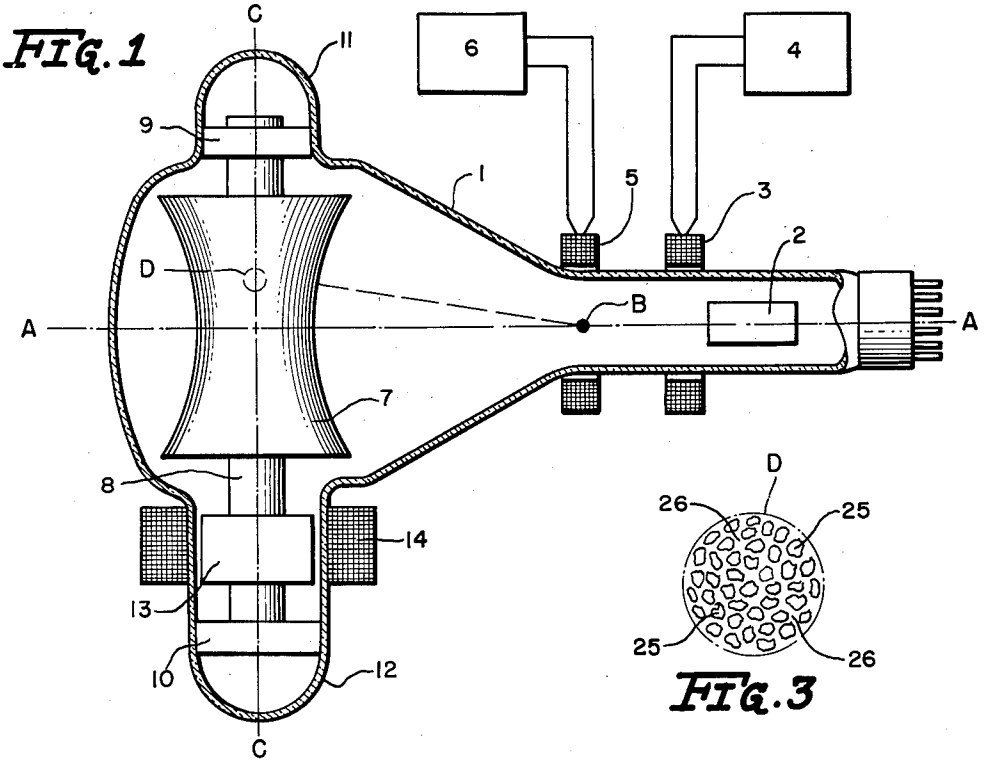

FIG. 3

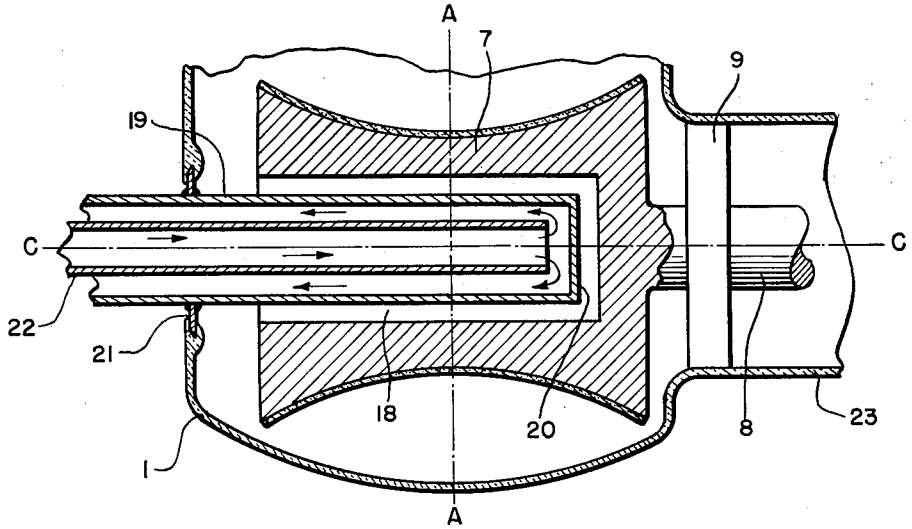

FIG. 2

United States Patent Office

3,123,733
Patented Mar. 3, 1964

3,123,733

ROTARY ANODE CATHODE RAY TUBE

George Stanley Percival Freeman, Chiswick, London, England, assignor to Bush and Rank Cintel Limited, London, England, a British company

Filed Feb. 27, 1961, Ser. No. 91,825
Claims priority, application Great Britain Mar. 22, 1960
6 Claims. (Cl. 313—146)

This invention relates to improvements in rotary screen cathode-ray tubes, that is, to cathode ray tubes in which the phosphor material is carried upon a member arranged for rotation with respect to the electron gun which generates the bombarding electron beam by which the phosphor is excited to luminescence.

A cathode ray tube of this general type which has previously been described includes a phosphor-coated cylindrical anode member revolvable about its axis which is perpendicular to and intersects that of the electron gun. In such a tube the electron beam is scanned in one direction only in a plane including the axes of the electron gun and of the anode and the remaining component of deflection for producing a two-dimensional display is provided by the rotary movement of the anode member.

It is a principal object of this invention to provide an improved rotary anode cathode-ray tube.

It is a further object of this invention to provide a rotary anode cathode-ray tube with improved focusing characteristics.

It is another object of this invention to provide a tube as described which has improved heat dissipating capabilities with resultant higher power handling ability.

A still further object of this invention is to provide a rotary anode cathode-ray tube having reduced halation effects.

According to the present invention a rotary-screen cathode ray tube includes an electron gun for generating a beam of electrons and means for focusing the beam which may be deflected in a plane containing the axis of the gun by means contained within or ancillary to the tube, together with an anode member revolvable about an axis perpendicular to that of said gun and lying in the aforementioned plane and having a phosphor-coated surface formed by revolving, about the axis of revolution of the anode member, an arcuate line at least approximately geometrically similar to the locus of the focal point of the electron beam in the plane of its deflection. In many cases this locus is sufficiently closely approximated by a circular arc centered in said center of deflection.

In an advantageous embodiment of the invention the revolvable anode member is formed of a highly heat-conductive material and contains a coaxial, cylindrical cavity within which is disposed a stationary, coolable member. This arrangement allows the peak beam current to be increased without complex cooling arrangements.

It may also be found advantageous to apply the phosphor to the anode member as a series of discrete, closely adjacent areas, each small compared with the dimensions of an elementary area of the display to be produced. This device improves the detail contrast available in the display by preventing halation within the screen layer.

The features of the present invention which are believed to be novel are set forth with particularity in the appended claims. The organization and manner of operation of the invention together with further objects and advantages thereof, may best be understood by reference to the following description taken in connection with the accompanying drawings, in the several figures of which like numerals identify like elements, and in which:

FIGURE 1 is an axial cross-sectional view of one embodiment of cathode-ray tube incorporating the present invention;

FIGURE 2 is an axial cross-sectional view of part of a preferred embodiment of cathode-ray tube according to the invention; and

FIGURE 3 is an enlarged plan view of a portion D of the luminescent screen of the tube of FIGURE 1, modified in accordance with another embodiment of the invention.

The cathode-ray tube shown in FIGURE 1 comprises an evacuated glass envelope containing an electron gun 2 arranged to generate a beam of electrons proceeding along the axis of symmetry of the gun, which is indicated by the broken construction line AA. The electrons are focused by the magnetic field produced by a conventional focusing coil 3 which is fed with direct current from a suitable source 4, and are deflected in the plane of the paper by the magnetic field from a deflection yoke 5 fed from a conventional line-scan generator 6.

The focused electron beam is thus deflected about a center of deflection (indicated by point B) along a line, lying in the plane of the drawing, on the surface of a revolvable anode 7. This anode has a surface formed by revolving about its axis a circular arc centered at center of deflection B. The anode conveniently comprises a phosphor-coated metal body provided with a coaxial shaft 8 carried in bearings 9, 10 which are held in protrusions 11, 12 formed in envelope 1. Shaft 8 carries the rotor 13 of an induction or synchronous motor of which the stator 14 is placed over protrusion 12 and fed with suitable currents from a conventional source (not shown).

In operation the electron beam from gun 2, modulated in the usual manner by the signals to be displayed, is deflected by the magnetic fields generated by yoke 5 so that the point at which the electron beam assumes its narrowest cross-section is deflected about the center of deflection B in a locus which to a first degree of approximation will be a circular arc centered at the point at which the axis of gun 2 intersects the plane of symmetry of yoke 5. The true locus of the focal point of the electron beam departs from a circle owing to the effects of the fringing field of the yoke, but the depth of focus of the electron optical lens is often sufficient for a circular locus to be assumed.

Since the line formed by the intersection of the plane of deflection with the phosphor-coated surface of anode 7 is a circular arc struck from the center of deflection of the electron beam, the beam remains focused upon the screen during deflection without the usual focus correction. The invention is of course equally applicable to cathode-ray tubes employing electrostatic deflection and focus or a combination of electrostatic and magnetic deflection and focus.

This construction of rotary-anode cathode ray tube possesses the additional advantage that the optical system used to project an image of the display will have a curved image surface of the same general order of curvature as the generatrix of anode 7.

FIGURE 2 shows part of a modified embodiment of the invention in which cooling of the anode 7 is assisted by forming it with a coaxial cylindrical cavity 18 within which is disposed a cylindrical member 19 closed at its inner end 20 and sealed through the wall of the envelope by means of an integral flange 21. Conveniently there is provided within member 19 a pipe or conduit 22 which allows a coolant to be circulated through member 19, as indicated by arrows in the figure; however this is not essential, as cooling of member 19 may equally well

be effected by evaporation of liquid air or other volatile substance placed within it. In this case it will be necessary for the bearings, such as 9, and the rotor by which anode member 7 is rotated to be placed in a single lateral protrusion 23. It is also advantageous to blacken the internal surface of cavity 18 and the external surface of member 19 to facilitate the transfer of heat by radiation.

A further improvement in the performance of such a tube may be effected by depositing the phosphor screen on the anode member as an array of discrete coated areas 25 separated from each other by uncoated areas 26, as shown in FIGURE 3. This may be done by depositing the phosphor material cataphoretically through a photomechanically generated resist mask. This reduces halation due to reflection of light within the phosphor layer. The coated areas are preferably of small extent compared with the detail to be made visible in the display.

While particular embodiments of the invention have been shown and described, it will be obvious to those skilled in the art that changes and modifications may be made without departing from the invention in its broader aspects, and, therefore the aim in the appended claims is to cover all such changes and modifications as fall within the true spirit and scope of the invention.

I claim:

1. A rotary screen cathode-ray tube comprising: an electron gun for projecting a beam of electrons along a predetermined axis; means for focusing said beam; means for deflecting said beam in a plane containing said axis; an anode member revolvable about an axis of revolution substantially perpendicular to and coplanar with said predetermined axis; a surface of said anode member having a configuration corresponding to that formed by revolving about said axis of revolution an arcuate line at least approximately geometrically similar to the locus of the focal point of said electron beam in said plane; and a phosphor coating on said surface.

2. A rotary-screen cathode ray tube according to claim 1, in which the line of intersection of the coated surface of said anode member and said plane on the side of said axis of revolution nearer the source of said beam is a circular arc centered at the center of deflection of said beam.

3. A rotary-screen cathode ray tube according to claim 2, in which said deflecting means are electro-magnetic deflecting means, and in which said center of deflection is the point of intersection of the plane of symmetry of said deflecting means with the axis of said electron gun.

4. A rotary-screen cathode ray tube according to claim 1, in which said anode member is formed of heat-conductive material and contains a coaxial, cylindrical cavity within which is disposed a stationary coolable member.

5. A rotary-screen cathode ray tube according to claim 4, in which the inner surface of said cavity and the outer surface of said coolable member are blackened.

6. A rotary-screen cathode ray tube according to claim 1, in which said phosphor material is deposited on said anode member as a series of discrete areas separated from each other by uncoated areas to reduce halation due to reflection of light within the phosphor deposited areas.

References Cited in the file of this patent

UNITED STATES PATENTS

2,086,718	Knoll	July 13, 1937
2,637,827	Boyer et al.	May 5, 1953
2,898,495	Michlin	Aug. 4, 1959
2,914,696	Eshbach	Nov. 24, 1959