(No Model.) 3 Sheets—Sheet 1.

A. J. DAVIS.

STEAM GENERATOR.

No. 456,648. Patented July 28, 1891.

Fig. 1.

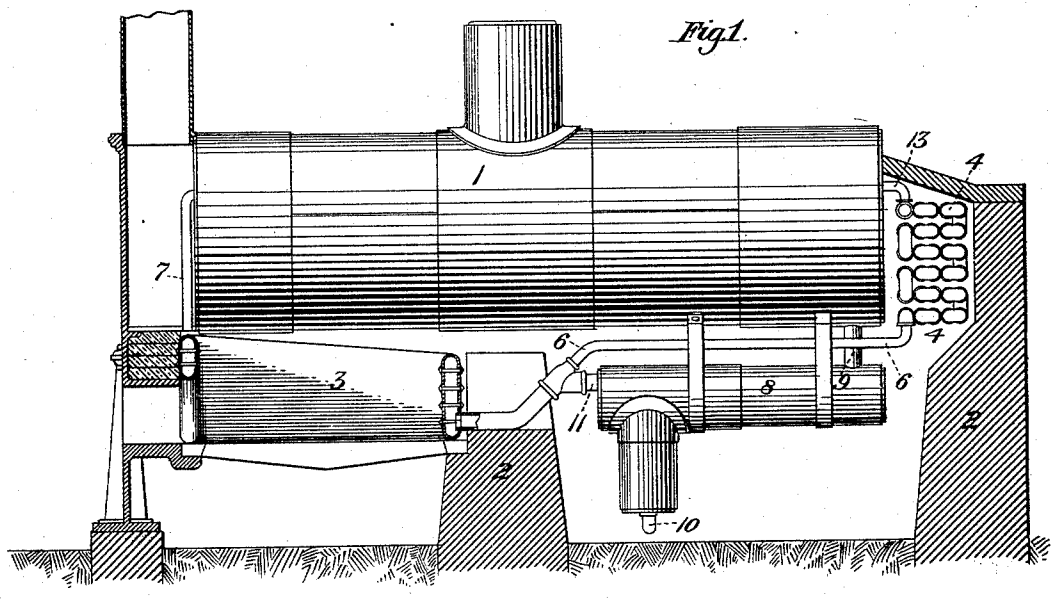

Fig. 2.

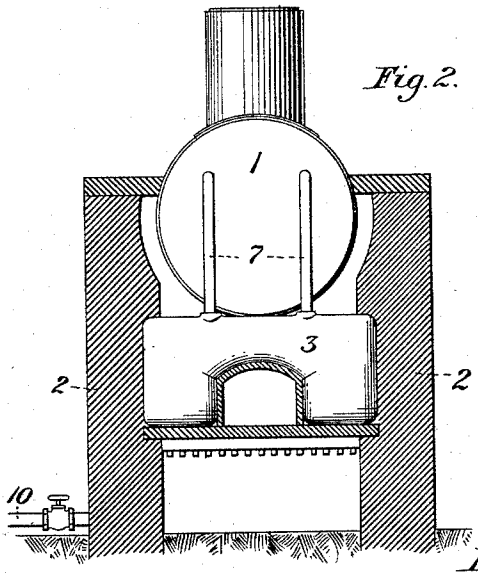

Fig. 3.

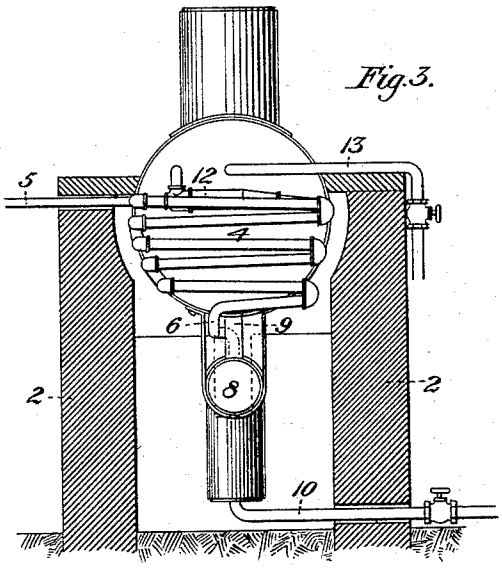

Fig. 4.

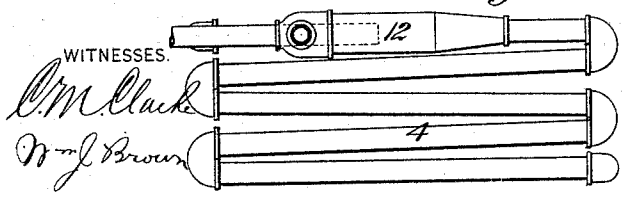

WITNESSES.

O. M. Clarke

Wm. J. Brown

INVENTOR.

Andrew J. Davis,
by George H. Christy
Atty

THE NORRIS PETERS CO., PHOTO-LITHO., WASHINGTON, D. C.

(No Model.) 3 Sheets—Sheet 2.

A. J. DAVIS.

STEAM GENERATOR.

No. 456,648. Patented July 28, 1891.

Fig. 5.

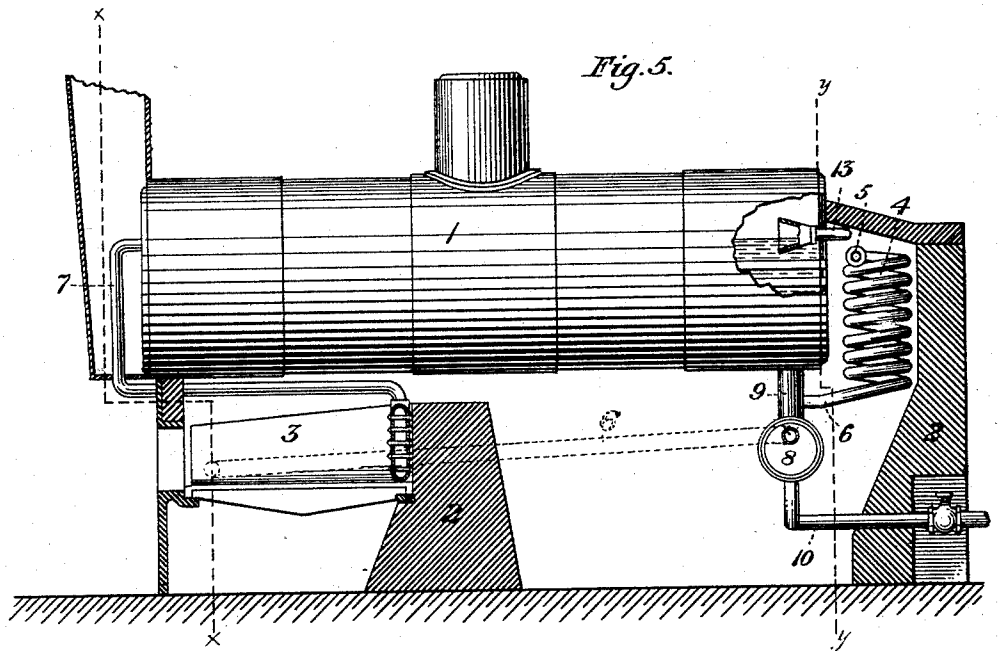

Fig. 6.

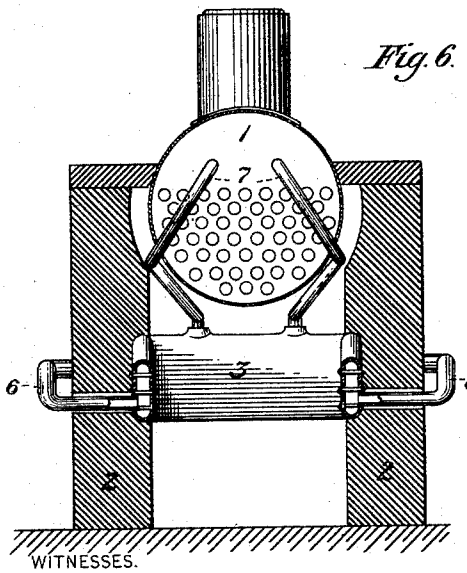

Fig. 7.

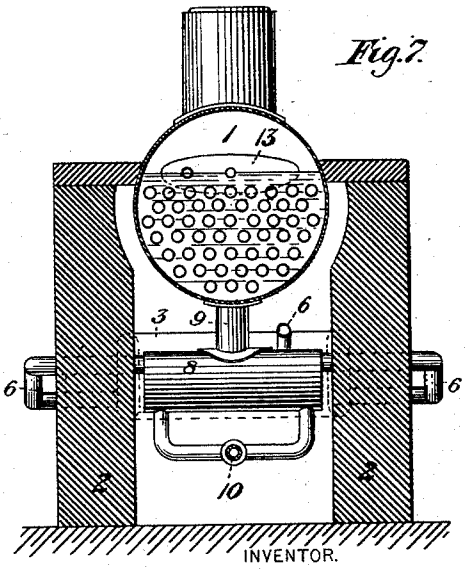

WITNESSES.

C. M. Clarke

W. J. Brown

INVENTOR.

Andrew J. Davis
by George H. Christy
atty

THE NORRIS PETERS CO., PHOTO-LITHO., WASHINGTON, D. C.

(No Model.)

3 Sheets—Sheet 3.

A. J. DAVIS.

STEAM GENERATOR.

No. 456,648. Patented July 28, 1891.

Fig. 8.

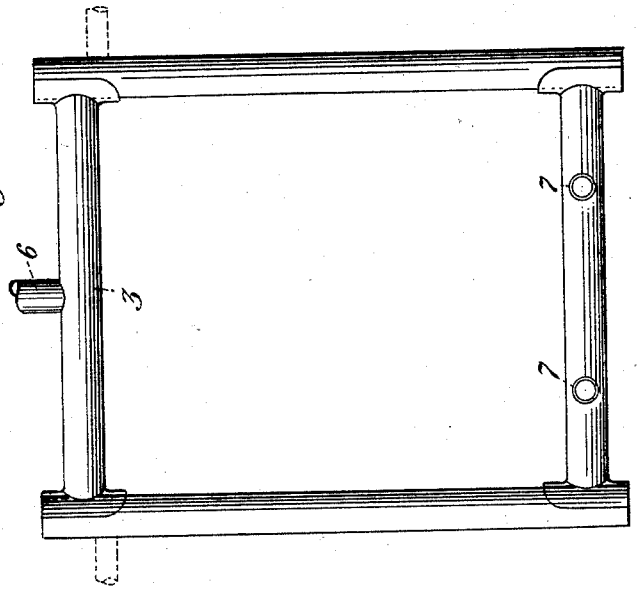

Fig. 9.

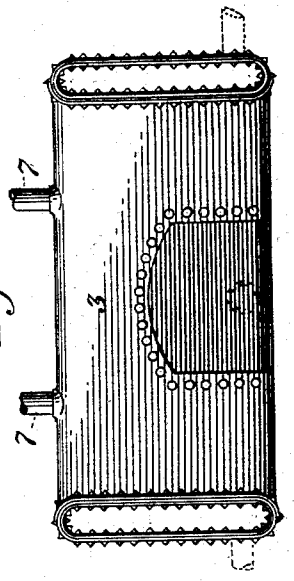

Fig. 10.

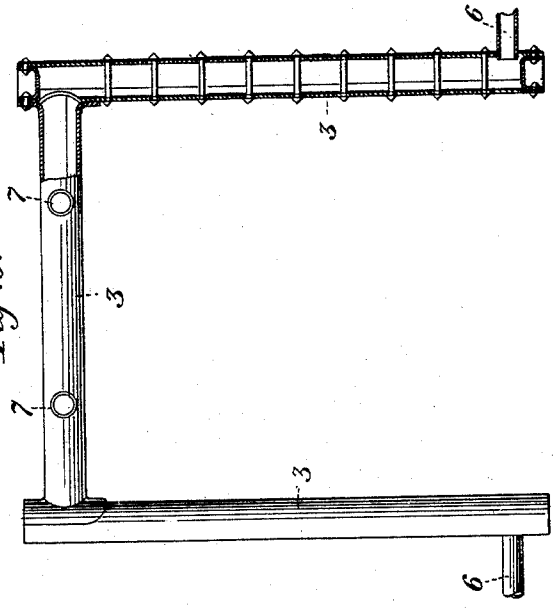

Fig. 11.

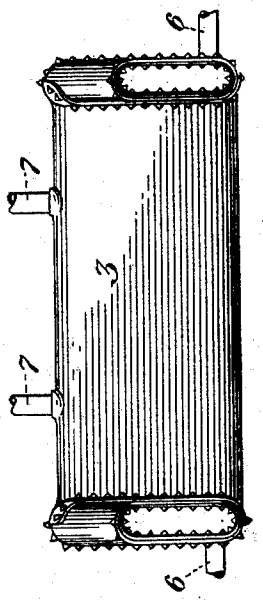

WITNESSES.

C. M. Clarke

Wm J. Brown

INVENTOR.

Andrew J. Davis,
by George N. Christy
atty

THE NORRIS PETERS CO., PHOTO-LITHO., WASHINGTON, D. C.

UNITED STATES PATENT OFFICE.

ANDREW J. DAVIS, OF ALLEGHENY, PENNSYLVANIA.

STEAM-GENERATOR.

SPECIFICATION forming part of Letters Patent No. 456,648, dated July 28, 1891.

Application filed September 1, 1890. Serial No. 363,595. (No model.)

To all whom it may concern:

Be it known that I, ANDREW J. DAVIS, a citizen of the United States, residing at Allegheny, in the county of Allegheny and State of Pennsylvania, have invented or discovered certain new and useful Improvements in Steam-Generators, of which improvements the following is a specification.

The invention described herein relates to certain improvements in steam-generators, and has for its object a construction whereby a more complete utilization of the heat of the combustion of the fuel is effected, a more efficient circulation of the water is produced, and provision is made for the detention and deposit of foreign matter outside of the generator, thereby preventing the formation of scale or other injurious deposit on the plates, tubes, or flues of the boiler.

In general terms the invention consists in the construction and combination of the several parts or elements, all as more fully hereinafter described and claimed.

In the accompanying drawings, forming a part of this specification, Figure 1 is a view in side elevation of a steam-generator embodying my invention. Figs. 2 and 3 are respectively front and rear elevations of the same. Fig. 4 is a detail view of the heater. Fig. 5 is a view in side elevation of a steam-generator wherein the water-box surrounds the fire-chamber on three sides only. Figs. 6 and 7 are sectional elevations on the lines *x x* and *y y*, respectively, of Fig. 5. Fig. 8 is a plan, and Fig. 9 an end elevation, of the water-box entirely surrounding the fire-chamber. Fig. 10 is a view partly in section and partly in plan, and Fig. 11 is an elevation, of the form of water-box shown in Fig. 5.

The boiler 1 is of the usual or any suitable construction, and is supported in the customary manner upon brick foundations 2.

In lieu of forming the fire-chamber of brick, as is customary, I provide a double-walled shell 3, which, for convenience, I term the "water-box." This shell or water-box is formed with four sides, as shown in Figs. 1, 2, 8, and 9, or with three, as shown in Figs. 5, 6, 10, and 11, and is made of a height to extend from the grate-bars up to top of the bridge-wall, which is formed, in part, by the rear wall of the water-box, as shown in Figs. 1 and 5. While it is preferred to form this water-box of metal plates properly stayed by transverse bolts or rivets in the manner well known in the art, it may be formed of cast steel or iron in such manner as to withstand the pressure to which it may be subjected.

In the smoke-box at the rear end of the boiler I arrange a coil of pipe 4, which is connected at one end to the feed-water-supply pipe 5 and at its opposite end by a pipe 6 to the water-box 3 at a suitable point near its lower edge, as shown in Fig. 1. The water-box is connected to the front end of the boiler by one or more pipes 7, extending from one or more points near the upper edge of the water-box and entering the boiler at or near its normal water-level, as shown in Figs. 1, 2, 5, and 6.

As is customary, a mud-drum 8 is arranged under the boiler and is connected thereto by a pipe 9, entering the boiler near its rear end. This mud-drum is provided with a blow-off pipe 10, and is connected by a branch pipe 11 with the pipe 6, connecting the feed-water heater 4 and the water-box, as shown in Fig. 1. If desired, the heater 4 may be connected to the mud-drum and the latter connected to the water-box by the pipe 11, as shown in Figs. 5 and 7. The supply-pipe 5 is connected by a siphon 12 to the heating-coil 4, and the receiving end of the siphon is connected to the boiler at or near its normal water-level, thereby providing for an upward flow or circulation of the water through the coil when the feed-water is cut off. A surface blow-off 13, having a flaring mouth, is arranged at the rear end of the boiler for the removal of oil and scum therefrom. At the same time it is carried to the rear end of the boiler by the constant travel of the water in that direction, produced by the peculiar arrangement of the connection between the boiler and the water-box. The water-box being subjected to the greatest heat and containing a comparatively small volume of water, the latter will be rapidly heated and will by reason of its reduced specific gravity rise up through the pipes 7, and the colder water at the rear end of the boiler will pass down into the mud-drum, and thence by the pipes 11 and 6 in the arrangement shown in Figs. 1, 2, and 3, or by the pipes 11 in the construction shown in Figs. 5, 6, and 7, thus pro-

ducing a rapid circulation of the water through said water-box and boiler. When the feed is shut off, circulation will also be established through the pipe 6, up through the heater 4, into the rear end of the boiler, the heat applied during the flow through the heater accelerating circulation in this direction. When the water is being fed, it will be heated to a considerable degree by the heater before entering the water-box, where it will be heated to the point of ebullition. The water and saturated steam flow thence by pipes 7 into the boiler, where, being further heated, the steam separates from the water the impurities remaining in the latter, which pass therewith to the rear end of the boiler and thence into the mud-drum, where the ebullition, if there be any, is at a minimum, thus affording opportunity for the impurities to settle therein.

When water containing a considerable amount of impurities is used, it is preferred to connect the heater to the mud-drum, as shown in Figs. 5 and 7, so as to afford opportunity for at least a partial separation of such impurities before the water enters the water-box.

While it is not new to employ a water-box furnace in connection with a steam-boiler, yet by reason of my new arrangement of connections between the water-box and boiler I attain new and useful results—as, for example, by connecting the upper portion of the water-box to the front end of the boiler at or near the normal water-level and the lower portion of the water-box to the under side of the boiler at or near its rear end. Provision is made for a circulation of the water through the fire-box and through the entire length of the boiler, thereby rendering the boiler more efficient as a steam-generator, such construction producing such a circulation as will effect a movement of the oil and scum to the rear end of the boiler, where it can be removed by means of the surface blow-off provided for that surface. It will also be observed that the water from the feed device passes through the mud-drum, as does also the water in its circulation from the rear end of the boiler to the water-box, thus providing a receptacle wherein matter held in suspension in the water may be deposited. It will be readily understood that in such a construction all scale-producing elements, which have heretofore been a source of great annoyance and expense to steam uses, can be entirely or to a very large extent removed. By the construction and arrangement of the feed-water heater at the rear end of the boiler and its connection thereto by means of a siphon the waste heat can be utilized, and that irrespective of whether feed-water is passing into the boiler or not. By admitting the feed-water partially heated into the circulating water from the boiler, which is at a high temperature, the liability to corrosion and the cracking of the plates by expansion and contraction is avoided, and, further, by producing a circulation of the water from the front to the rear end of the boiler all liability of a deposit of scale or sediment over the fire is avoided.

It will be observed that in the construction heretofore described the heating-surface of the generator is largely increased and that the additional heating-surfaces are so arranged as to utilize heat heretofore wasted; and, further, it is a characteristic of this improvement that the additional heating-surfaces are so arranged relatively to each other and to the boiler proper as to effect a circulation of the water from the front to the rear end, and that independent of the feed-water—*i. e.*, whether water is being supplied or not—thereby preventing to a greater extent any deposit within the boiler proper; and, further, by highly heating the water prior to its entrance into the boiler the latter is relieved of strains incident to alternate cooling and heating.

I claim herein as my invention—

1. A steam-generator having in combination a boiler and a water-box forming the furnace of said boiler, the water-box being connected to the extreme front and rear ends of the boiler, the rear connection being located at the lower side of the boiler, whereby the water is caused to traverse the entire length of the boiler, substantially as set forth.

2. A steam-generator having in combination a boiler and a water-box forming the furnace of said boiler, either wholly or in part, the upper portion of the water-box being connected to the front end of the boiler at or near the normal water-line and the lower portion to the rear end of the boiler at or near the bottom thereof, substantially as set forth.

3. A steam-generator having in combination a boiler, a water-box forming the furnace of said boiler and connected to the front end thereof by external connections, and a feed-water heater connected to the water-box and to the rear end of the boiler, substantially as set forth.

4. A steam-generator having in combination a boiler, a water-box forming the furnace of said boiler and connected to the front end thereof at or near the normal water-level, and a mud-drum connected to the rear end of the boiler at or near its under side and to the water-box, whereby the water is caused to circulate from the front to the rear end of the boiler and thence through the mud-drum to the water-box, substantially as set forth.

5. A steam-generator having in combination a boiler, a water-box forming the furnace of said boiler, either wholly or in part, and connected to the front end thereof, a mud-drum connected to the water-box and to the rear end of the boiler, and a feed-water heater connected to the water-box, substantially as set forth.

6. A steam-generator having in combination a boiler, a water-box forming the furnace of said boiler, either wholly or in part, and

connected to the front end thereof, a mud-drum connected to the water-box and to the rear end of the boiler, and a feed-water heater also connected to the water-box and the rear end of the boiler at or near the normal water-level, substantially as set forth.

7. A steam-generator having in combination a boiler, a water-box forming the furnace for said boiler, the water-box being connected to the front and rear ends of the boiler by external connections, and a surface blow-off arranged in the rear end of the boiler at or near the normal water-level, substantially as set forth.

In testimony whereof I have hereunto set my hand.

ANDREW J. DAVIS.

Witnesses:
DARWIN S. WOLCOTT,
W. B. CORWIN.