March 23, 1943. P. E. PEARSON 2,314,367

SCROLL STRIP FORMING APPARATUS

Filed Dec. 17, 1941 3 Sheets-Sheet 1

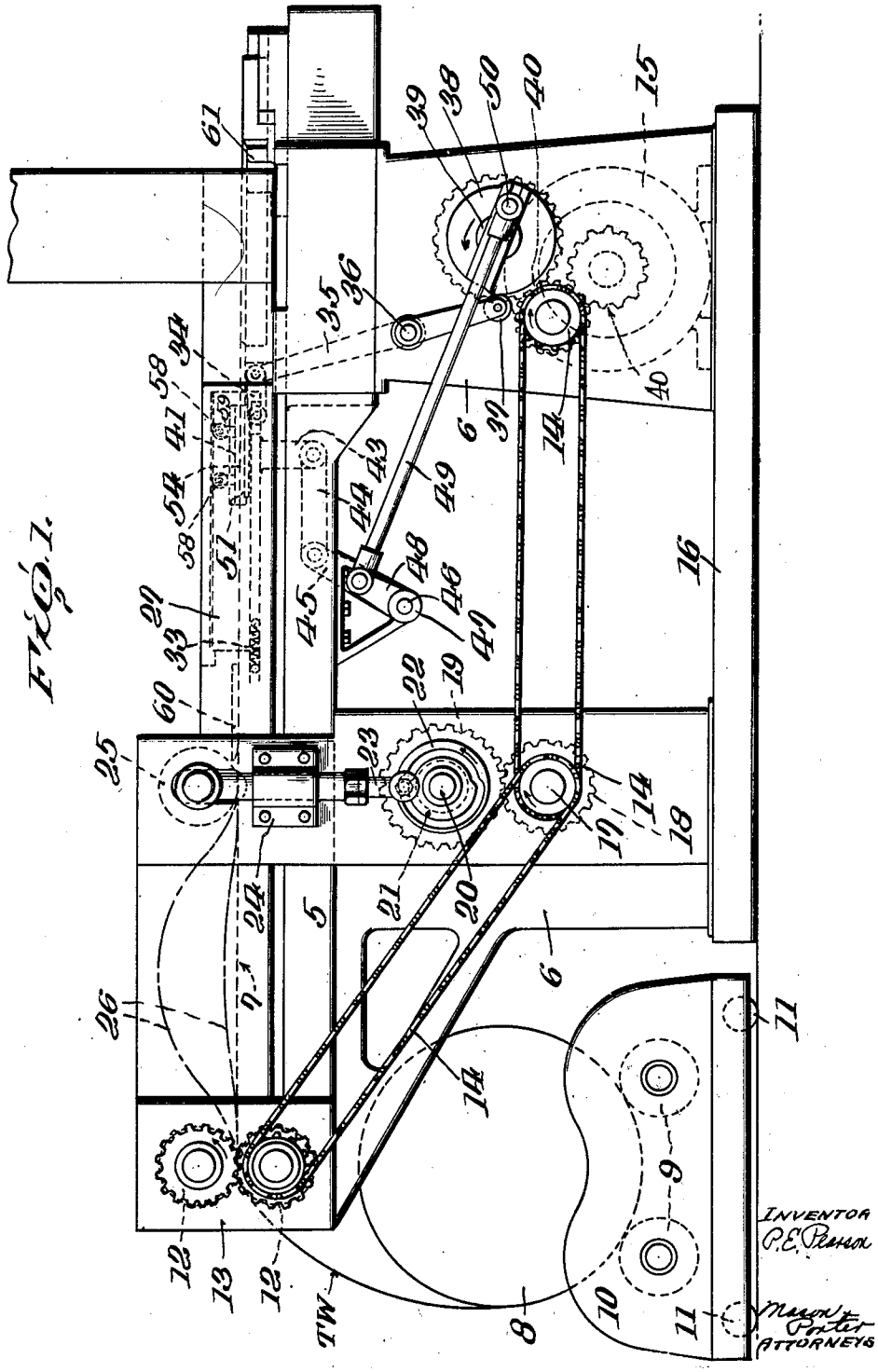

March 23, 1943. P. E. PEARSON 2,314,367

SCROLL STRIP FORMING APPARATUS

Filed Dec. 17, 1941 3 Sheets-Sheet 2

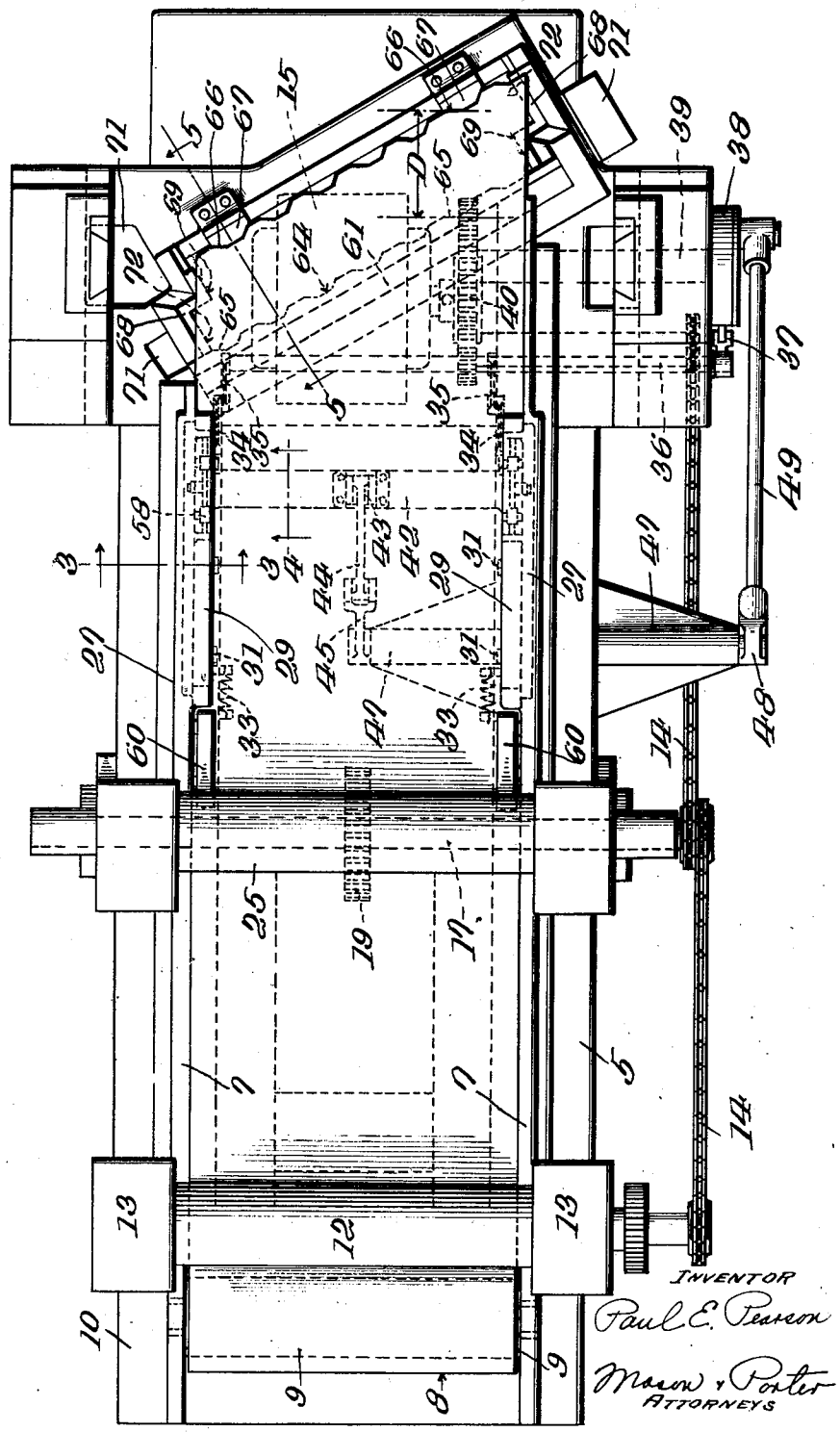

FIG. 2.

INVENTOR
Paul E. Pearson
Mason & Porter
ATTORNEYS

March 23, 1943. P. E. PEARSON 2,314,367

SCROLL STRIP FORMING APPARATUS

Filed Dec. 17, 1941 3 Sheets-Sheet 3

Fig. 3.

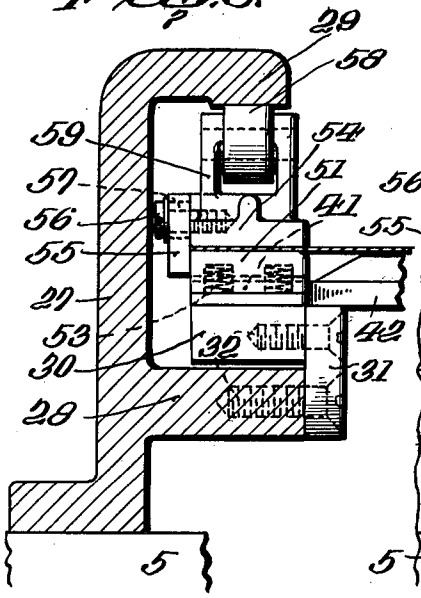

Fig. 4.

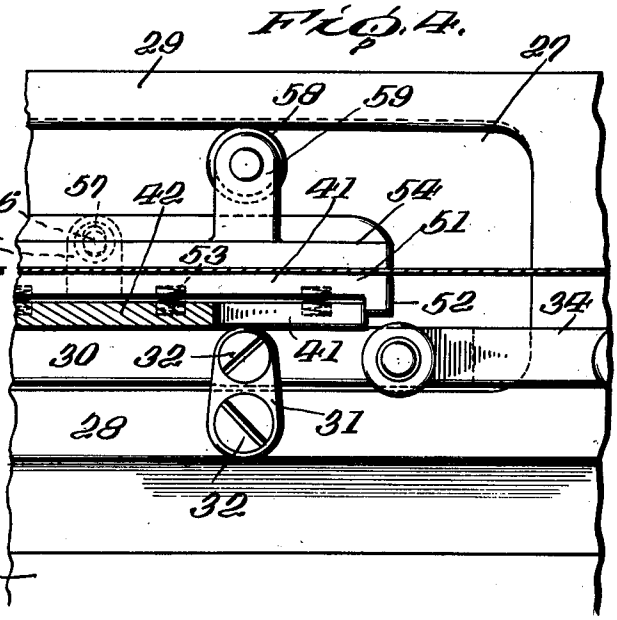

Fig. 5.

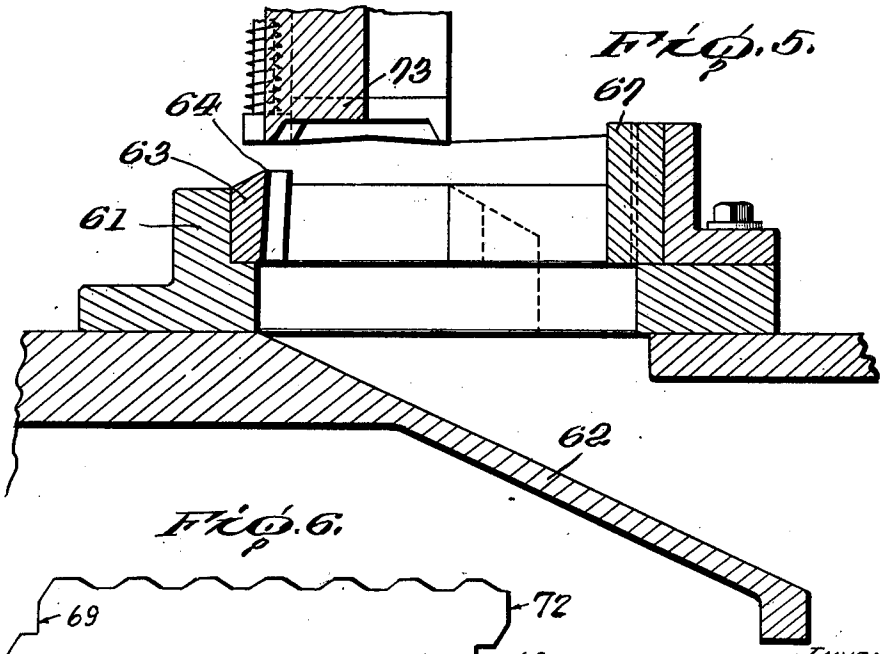

Fig. 6.

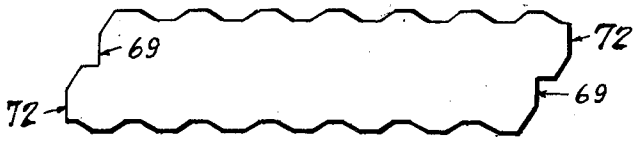

INVENTOR
Paul E. Pearson

By

Mason & Porter
ATTORNEYS

UNITED STATES PATENT OFFICE

2,314,367

SCROLL STRIP FORMING APPARATUS

Paul E. Pearson, Chicago, Ill., assignor to Continental Can Company, Inc., New York, N. Y., a corporation of New York

Application December 17, 1941, Serial No. 423,385

14 Claims. (Cl. 164—49)

The invention relates generally to the forming of scroll strips from which end closures for cans or similar containers are to be punched and it primarily seeks to provide a novel apparatus for cutting from a continuous web of strip material the improved form of scroll strip disclosed in the co-pending application for U. S. Letters Patent, Serial No. 412,635, filed by Paul E. Pearson on September 27, 1941.

Prior to the invention disclosed in the Pearson application above referred to, it was customary to form scroll strips with parallel side edges and ends bearing right angular relation to said side edges. When strips having parallel line side edges and ends bearing right angular relation to said side edges are used, much unnecessary wastage of metal is occasioned because of the provision of the straight line side edges, and this is particularly true when the strips are subsequently to be fed to punches so placed that the holes formed by the removal of the end closure blanks are arranged in multiple rows with the centers of the holes aligned in longitudinal and vertical rows. This particular arrangement provides much unnecessary wastage of metal between the rows of openings. In order to minimize the wastage of metal between the rows, the openings in the respective rows have been staggered so that each hole center in a given row will be centered between two hole centers in an adjacent row, but with this arrangement much unnecessary wastage of metal is occasioned because of the necessity of spacing at least one opening a considerable distance from the end of the strip at each end thereof. The unnecessary wastage, last spoken of has been eliminated according to the Pearson invention by forming the strips with parallel side edges and parallel end edges but with said end edges bearing angular relation to the side edges, the strips being formed by longitudinally feeding a continuous web or coil strip and making successive transverse, diagonally disposed cuts across the end of the web. The present invention resides in the provision of novel apparatus for thus feeding and cutting the continuous coil strip or web.

Another object of the invention is to provide in apparatus of the character stated, means for forming notches in the ends of the diagonally cut strips, said notches being so disposed as to provide right angular abutment edge portions effective during subsequent punching of the strips for properly engaging positioning stops or gages for controlling the punching operations.

Another object of the invention is to provide in apparatus of the character stated, means for forming the diagonal, strip severing cuts on a scroll line conforming generally to the positioning of the punch holes to be subsequently formed in the strip, certain portions of the scroll cut edges bearing right angular relation to the line of feed of the web so as to be engageable with positive stop members to accurately gage the strip severing operations.

Another object of the invention is to provide in apparatus of the character stated, means for continuously feeding the web from a supply roll, means intermittently operable for stopping the progress of the continuously fed web so as to provide slack in the fed web, and a reciprocating feeder means for feeding to the diagonal cutting means successive strip lengths from the slack thus formed.

Another object of the invention is to provide in apparatus of the character stated, a novel reciprocatory web feeding means including reciprocable gripper elements engaged in opposition above and below the web at each side edge thereof, means to cause the cooperating gripper elements to oppose in positive gripping relation on the forward or feed stroke, and means to positively separate said elements to enable them to move freely along the web on the return stroke.

Another object of the invention is to provide in apparatus of the character stated, novel means for confining the web against buckling as the gripper elements move along the web on the return stroke.

With the above and other objects in view which will more fully appear, the nature of the invention will be more clearly understood by following the description, the appended claims, and the several views illustrated in the accompanying drawings.

In the drawings:

Figure 1 is a side elevation of an apparatus embodying the invention, the vertically reciprocable cutting punch being omitted and the reciprocating feeder means being shown at the forward or feed stroke limit.

Figure 2 is a plan view of the apparatus illustrated in Figure 1.

Figure 3 is an enlarged fragmentary vertical cross section taken on the line 3—3 on Figure 2.

Figure 4 is an enlarged fragmentary vertical longitudinal section taken on the line 4—4 on Figure 2.

Figure 5 is an enlarged fragmentary vertical section taken on the line 5—5 on Figure 2.

Figure 6 is a plan view of one of the scroll strips.

In the apparatus herein disclosed as an example of embodiment of the invention, there is included a bed 5 supported on frame standards 6 and presenting side supports or feedways 7 over which the web TW from which the scroll strips are to be formed is fed.

The web TW is fed from a continuous coil or roll 8 which may be supported on supporting rollers 9 in a cradle 10 which is in turn mounted on rollers 11 so as to facilitate handling of the roll and placement thereof and the cradle in cooperative relation with the remainder of the apparatus.

In passing into the machine the web TW passes between feed rolls 12 which are rotatable in bearings 13 and are positively driven, through power transmitting connections 14, from a motor 15 supported on the machine base 16 from which the frame standards 6 rise.

The power transmitting connections generally designated 14 include a driven countershaft 17 having a gear 18 secured thereon. The gear 18 meshes with a gear 19 on a cam shaft 20 which is rotatable in suitable bearings 21 provided therefor in the frame standards 6 and which is equipped with grooved cams 22 which are effective to impart lifting and lowering movement to a pair of actuators 23. The actuators 23 are vertically slidable in suitable guides 24 and carry a stop roll 25 which overlies the feedways 7 and is engageable with the web TW which is fed over said feedways.

Each time the roll 25 is lowered onto the web TW it stops the forward progress of the web as it is being continuously fed by the feed rolls 12 and causes a slack loop such as is indicated at 26 to be formed in the web between the stop roll 25 and the feed rolls 12. See Figure 1.

Beyond the drop roll 25 a pair of side wings 27 are mounted in parallel spaced relation above the bed 5, and each wing 27 includes a side shelf 28 and a vertically spaced and overlying guide track 29. See Figures 1, 2, 3 and 4.

Directly overlying each side wing shelf 28 is a bed plate 30, and each bed plate is supported a slight distance above the respective underlying shelf 28 on a plurality of vertically disposed parallel links 31 which are pivotally connected at their upper and lower extremities, as at 32, to said bed plate and shelf. It will be readily apparent that when the links 31 are in the vertical position illustrated in Figure 4, the bed plates 30 will be held spaced a slight distance above the underlying shelf portions 28, but whenever the links are swung to the left about their lower pivotal connections, as viewed in Figure 4, the bed plates 30 will be lowered slightly for a purpose later to be described.

A retractile spring 33 which is anchored to the respective side wing 27 is connected to the left hand end of each bed plate 30, as viewed in Figures 1, 2 and 4 and these springs constantly tend to move the bed plates 30 to their lowered positions just above referred to. Each bed plate has its other or front end pivot link-connected, as at 34, to the upper end of a lever 35 which is pivoted, as at 36, to the adjacent frame standard 6. One of the levers is extended downwardly beyond its pivotal mounting 36 and is equipped with a roller 37 which is engageable by a cam 38 mounted on a shaft 39, the latter being driven through a gear train 40 from the shaft of the motor 15. See Figures 1 and 2 of the drawings. It will be apparent that each time the high point of the cam strikes and displaces the roller 37, it will swing the levers 35 forwardly and cause the bed plates 30 to be elevated to the position illustrated in Figures 3 and 4 of the drawings against the tension of the anchored spring 33. It will be observed by reference to Figure 1 that the cam 38 includes a concentric dwell portion for holding the bed plates elevated throughout a feeding interval which will be mentioned later.

A shoe 41 is disposed over and is slidable along each bed plate 30, and these shoes are rigidly connected by a cross head 42 so as to reciprocate in unison over said bed plates. The cross head 42 is equipped with a depending bracket arm 43 which is connected, as at 44, to a crank 45 projecting from a cross shaft 46 which is rockably supported in bearings 47 secured to the machine bed 5. Another crank 48 is secured to the shaft 46 and is connected by a pitman 49 with a crank pin 50 projecting laterally from and adjustably mounted on the cam 38. It will be apparent that as the cam 38 is rotated, its rotary movement will be transmitted in the form of reciprocatory movement to the cross head 42 and the shoes 41 secured thereto.

A lower gripper shoe 51 overlies and is movable with each shoe 41, the shoes 51 being connected to move with the shoes 41 through the medium of the engagement of the depending lugs 52 with the respective ends of the driving shoes 41. Compression springs 53 interposed between the shoes 41 and 51 of the respective shoe sets yieldably urge the gripper shoes 51 of these set upwardly. Each lower gripper shoe is opposed by an overlying or upper gripper shoe 54 and is equipped at its outer side edge with a plurality of upstanding lugs 55 which have lost motion connection with the upper gripper shoes through the medium of connecting screws 56 which pass through vertically elongated slots 57 formed in the upper ends of said lugs. The lug and screw connections 55, 56 cause the upper and lower gripper shoes 51, 54 comprising each gripper shoe set to reciprocate in unison and yet permit a limited amount of separate movement between the opposing gripper shoe elements 51 and 54 for a purpose that will later become apparent. Each upper gripper shoe 54 is equipped with two guide rollers 58 which engage and roll along under the respective overlying guide track 29, said rollers being mounted in supporting arms 59 extending upwardly from said gripper shoes.

It will be apparent that the continuously rotating cam 38 will operate through the crank and link connections 49, 48, 45, 44 to impart continuous reciprocation to the gripper shoe sets 51, 54. The cam 38 is so timed with relation to the reciprocation imparting devices just referred to that the links 34 will be drawn forwardly and the bed plates 30 held in their elevated positions illustrated in Figures 3 and 4 of the drawings throughout each forward stroke movement of the gripper shoe sets 51, 54. At the completion of each forward stroke movement of these gripper shoe sets, the forward pull on the links 31 will be relaxed and the anchored springs 33 will become effective to retract and effect a lowering of the bed plates 30. Whenever the bed plates 30 are elevated, or during the forward stroke of the gripper shoes 51, 54, the shoe elements 51 and 54 will positively grip the edges of the web TW between them in the manner illustrated in Figures 3 and 4 and will impart a definite and positive step feed to said web. Whenever the bed plates

30 are lowered in the manner just described, the gripping engagement of the shoes with the web edge portions will be relaxed and the shoes will move freely along the web edge portions on their return or retraction stroke.

Each time the gripper shoes move forward on a feed stroke they feed the web from the slack loop 26 and are relieved of the heavier load of feeding directly from the roll 8, this direct feeding from the roll being accomplished by the feed rolls 12. The cams 22 are so timed that they will drop the stop roll 25 onto the web as each return stroke of the gripper shoes is about to commence, thereby to hold the web TW stationary, and in order to prevent buckling of the web due to frictional contact between web edge portions and the shoes 51, 54, holddown members 60 are rigidly supported by the side wings 27 directly over the web feedways just beyond the roll 25 in the manner clearly illustrated in Figures 1 and 2 of the drawings.

A shear die 61 is disposed diagonally across the frame in a position for diagonally traversing the advance or free end portion of the fed web TW in the manner illustrated in Figures 1 and 2 of the drawings. The die 61 is secured on the machine frame over the punched strip discharging chute 62 and is equipped with a diagonal shear blade 63 which has a scroll shaped cutting edge 64, as is clearly illustrated in Figure 2 of the drawings. It will be observed by reference to this figure that certain portions 65 of the scroll shaped cutting edge are disposed at right angles or perpendicular to the line along which the web TW is fed, as viewed in Figure 2, and certain of these perpendicular portions oppose like perpendicular surfaces 66 on positive stop elements 67 secured at the opposite or advance side of the die and which are effective to properly limit step feed movements of the web. In Figure 2 of the drawings the web is shown as having been advanced a full step feed distance against the stops 67 and about to have a scroll strip severed therefrom. It will also be observed that the stops 67 conform to the scroll shaping of the web end extremity, and that the spacing between the previously mentioned parallel perpendicular surfaces 65 and 66 represents the distance D of a step feed of the web.

It will also be observed by reference to Figure 2 of the drawings that the die includes at each end thereof an angularly shaped end shear plate 68 each of which is effective to form a notch 69 in the engaged end edge portion of the formed scroll strip. The notches 69 are so shaped that they provide end abutment edges which are disposed at right angles to or perpendicular to the parallel side edge portions of the scroll strip and are effective to engage positive stops in the subsequent punching of the scroll strips to efficiently control that punching. Clip receiving openings or clip diverting equipment generally designated 71 are provided, and it will also be observed that the blade 63 and the cooperating blades 68 at one end of the die and the blade 68 at the opposite end of the die serve to form corner clips 72 effective to provide additional right angular or perpendicular end edge portions on the scroll strip. It is to be understood, of course, that in the formation of the diagonally cut scroll strip, a complementary vertically reciprocable punch 73 cooperates with the die 61, 68 in the well known manner.

It will be apparent from the foregoing description that each time the web edge gripper devices move forwardly, they will present a scroll strip length of the free end portion of the continuous web against the stops 67 and over the die equipment 61, 68 and that when the punch 73 descends it will sever a scroll strip from the web end and permit it to fall over the delivery chute 62. A severed scroll strip is illustrated in Figure 6. The scroll strip length thus presented is fed by the reciprocatory feeder from the slack loop 26, and after each strip length feeding the grippers move freely over the web edges on their return or retraction stroke, the web being held against buckling in advance of the stop roll 25 by the holddown devices 60 in the manner hereinbefore described.

It is of course to be understood that the details of structure and arrangement of parts may be variously changed and modified without departing from the spirit and scope of the invention.

I claim:

1. In a scroll strip cutting machine, means for feeding step-by-step a continuous web of scroll strip material, and means for severing successive strip lengths from the web by cuts extending transversely of the web in angular relation to the line of feed, thereby to form individual scroll strips each having parallel side edge portions and parallel end edge portions with said side edge portions bearing acute angular relation to the end edge portions, said severing means including means for forming a notch in at least one end edge portion disposed to present an abutment edge bearing right angular relation to said side edge portions.

2. In a scroll strip cutting machine, means for feeding step-by-step a continuous web of scroll strip material, means for severing successive strip lengths from the web by cuts extending transversely of the web in angular relation to the line of feed, thereby to form individual scroll strips each having parallel side edge portions and parallel end edge portions with said side edge portions bearing acute angular relation to the end edge portions, said severing means including a blade shaped to cut a scroll edge certain portions of which bear right angular relation to the direction of feed of the web, and stop means against which the web is fed and engageable with said right angularly presented scroll edge portions to determine the positions of the transverse angular cuts.

3. In a scroll strip cutting machine, means for feeding step-by-step a continuous web of scroll strip material, means for severing successive strip lengths from the web by cuts extending transversely of the web in angular relation to the line of feed, thereby to form individual scroll strips each having parallel side edge portions and parallel end edge portions with said side edge portions bearing acute angular relation to the end edge portions, said severing means including a blade shaped to cut a scroll edge certain portions of which bear right angular relation to the direction of feed of the web, and stop means against which the web is fed and engageable with said right angularly presented scroll edge portions to determine the positions of the transverse angular cuts, and said stops including wall portions bearing angular relation one to another and conforming in positioning to scroll edge portions of the web which are moved into engagement therewith.

4. In apparatus of the character described, a bed providing ways over which a web of strip material is supported and fed, a reciprocable cutter for severing successively presented scroll strip lengths from the web, reciprocable means for moving the end of the web definite step

lengths to the cutter, and means for forming a slack loop in the web in advance of the reciprocable means and prior to each step feed movement thereof.

5. In apparatus of the character described, a bed providing ways over which a web of strip material is supported and fed, a reciprocable cutter for severing successively presented scroll strip lengths from the web, reciprocable means for moving the end of the web definite step lengths to the cutter, and means for forming a slack loop in the web in advance of the reciprocable means and prior to each step feed movement thereof, said last named means including means for imparting continuous feed movement to the web.

6. In apparatus of the character described, a bed providing ways over which a web of strip material is supported and fed, a reciprocable cutter for severing successively presented scroll strip lengths from the web, reciprocable means for moving the end of the web definite step lengths to the cutter, and means for forming a slack loop in the web in advance of the reciprocable means and prior to each step feed movement thereof, said last named means including means for imparting continuous feed movement to the web, and a web clamping element movable into and out of engagement with the web in timed relation to the movements of the reciprocable means.

7. In a scroll strip cutting machine, means for feeding step-by-step a continuous web of scroll strip material, means for severing successive strip lengths from the web by cuts extending transversely of the web in angular relation to the line of feed, thereby to form individual scroll strips each having parallel side edge portions and parallel end edge portions with said side edge portions bearing acute angular relation to the end edge portions, said severing means including a blade shaped to cut a scroll edge certain portions of which bear right angular relation to the direction of feed of the web, stop means against which the web is fed and engageable with said right angularly presented scroll edge portions to determine the positions of the transverse angular cuts, said feeding means including a reciprocable feeder means for moving the end of the web definite step lengths against said stop means, and means for forming a slack loop in the web in advance of the reciprocable means and prior to each step feed movement thereof.

8. In a scroll strip cutting machine, means for feeding step-by-step a continuous web of scroll strip material, means for severing successive strip lengths from the web by cuts extending transversely of the web in angular relation to the line of feed, thereby to form individual scroll strips each having parallel side edge portions and parallel end edge portions with said side edge portions bearing acute angular relation to the end edge portions, said severing means including a blade shaped to cut a scroll edge certain portions of which bear right angular relation to the direction of feed of the web, stop means against which the web is fed and engageable with said right angularly presented scroll edge portions to determine the positions of the transverse angular cuts, said feeding means including a reciprocable feeder means for moving the end of the web definite step lengths against said stop means, and means for forming a slack loop in the web in advance of the reciprocable means and prior to each step feed movement thereof, said last named means including means for imparting continuous feed movement to the web, and a web clamping element movable into and out of engagement with the web in timed relation to the movements of the reciprocable means.

9. In apparatus of the character described, a bed providing ways over which a web of strip material is supported and fed, a reciprocable cutter for severing successively presented scroll strip lengths from the web, reciprocable means for moving the end of the web definite step lengths to the cutter, and means for forming a slack loop in the web in advance of the reciprocable means and prior to each step feed movement thereof, said reciprocable web moving means including web edge gripping means, and means for rendering said gripping means effective on each forward stroke and ineffective on each return stroke of the reciprocable web moving means.

10. In apparatus of the character described, a bed providing ways over which a web of strip material is supported and fed, a reciprocable cutter for severing successively presented scroll strip lengths from the web, reciprocable means for moving the end of the web definite step lengths to the cutter, means for forming a slack loop in the web in advance of the reciprocable means and prior to each step feed movement thereof, said reciprocable web moving means including web edge gripping means, and means for rendering said gripping means effective on each forward stroke and ineffective on each return stroke of the reciprocable web moving means, and means for preventing buckling of the web as the reciprocable web moving means moves on the return stroke.

11. In a scroll strip cutting machine, means for feeding step-by-step a continuous web of scroll strip material, means for severing successive strip lengths from the web by cuts extending transversely of the web in angular relation to the line of feed, thereby to form individual scroll strips each having parallel side edge portions and parallel end edge portions with said side edge portions bearing acute angular relation to the end edge portions, said severing means including a blade shaped to cut a scroll edge certain portions of which bear right angular relation to the direction of feed of the web, stop means against which the web is fed and engageable with said right angularly presented scroll edge portions to determine the positions of the transverse angular cuts, said feeding means including a reciprocable feeder means for moving the end of the web definite step lengths against said stop means, and means for forming a slack loop in the web in advance of the reciprocable means and prior to each step feed movement thereof, said last named means including means for imparting continuous feed movement to the web, and a web clamping element movable into and out of engagement with the web in timed relation to the movements of the reciprocable means, said reciprocable feeder including web edge gripping means, said reciprocable web moving means including web edge gripping means, and means for rendering said gripping means effective on each forward stroke and ineffective on each return stroke of the reciprocable web moving means.

12. In apparatus of the character described, a bed providing ways over which a web of strip material is supported and fed, a reciprocable cutter for severing successively presented scroll strip lengths from the web, reciprocable means for moving the end of the web definite step lengths

to the cutter, and means for forming a slack loop in the web in advance of the reciprocable means and prior to each step feed movement thereof, said reciprocable web moving means including a set of opposed upper and lower web edge gripper shoes at each side of the web, means overlying the upper shoes and limiting upward movement thereof, means for causing the opposed shoes to move together in the direction of the length of the web while permitting movement of said opposed shoes toward or from each other, and means for moving the lower shoes upwardly into gripping relation with the web and holding them there only during the forward or feeding stroke of the web moving means.

13. In apparatus of the character described, a bed providing ways over which a web of strip material is supported and fed, a reciprocable cutter for severing successively presented scroll strip lengths from the web, reciprocable means for moving the end of the web definite step lengths to the cutter, and means for forming a slack loop in the web in advance of the reciprocable means and prior to each step feed movement thereof, said reciprocable web moving means including a set of opposed upper and lower web edge gripper shoes at each side of the web, means overlying the upper shoes and limiting upward movement thereof, means for causing the opposed shoes to move together in the direction of the length of the web while permitting movement of said opposed shoes toward or from each other, and means for moving the lower shoes upwardly into gripping relation with the web and holding them there only during the forward or feeding stroke of the web moving means, said last named means comprising a bed plate underlying and slidably supporting the lower shoes at each side of the web, means for lifting the bed plates as the shoes move on the forward stroke, and means for lowering the bed plates as the shoes move on the return stroke.

14. In apparatus of the character described, a bed providing ways over which a web of strip material is supported and fed, a reciprocable cutter for severing successively presented scroll strip lengths from the web, reciprocable means for moving the end of the web definite step lengths to the cutter, means for forming a slack loop in the web in advance of the reciprocable means and prior to each step feed movement thereof, said reciprocable web moving means including a set of opposed upper and lower web edge gripper shoes at each side of the web, means overlying the upper shoes and limiting upward movement thereof, means for causing the opposed shoes to move together in the direction of the length of the web while permitting movement of said opposed shoes toward or from each other, means for moving the lower shoes upwardly into gripping relation with the web and holding them there only during the forward or feeding stroke of the web moving means, said last named means comprising a bed plate underlying and slidably supporting the lower shoes at each side of the web, means for causing the bed plates to be elevated by movement thereof in one direction and to be lowered by movement in the opposite direction, spring means for moving the bed plates in one direction, and cam means for moving the bed plates in the opposite direction, said cam means being timed with said web moving means so as to lift the bed plates only during the forward stroke movement of the gripper shoes.

PAUL E. PEARSON.