(12) INTERNATIONAL APPLICATION PUBLISHED UNDER THE PATENT COOPERATION TREATY (PCT)

(19) World Intellectual Property Organization
International Bureau

(43) International Publication Date
22 May 2020 (22.05.2020)

WIPO | PCT

(10) International Publication Number
WO 2020/102310 A1

(51) International Patent Classification:
E21B 3/03 (2006.01) *E21B 7/08* (2006.01)
E21B 7/06 (2006.01)

(21) International Application Number:
PCT/US2019/061128

(22) International Filing Date:
13 November 2019 (13.11.2019)

(25) Filing Language: English

(26) Publication Language: English

(30) Priority Data:
62/760,115 13 November 2018 (13.11.2018) US

(71) Applicant: **NATIONAL OILWELL VARCO, L.P.** [US/US]; 7909 Parkwood Circle Drive, Houston, Texas 77036 (US).

(72) Inventors: **WILLIAMS, Clay**; c/o National Oilwell Varco, L.P., 7909 Parkwood Circle Drive, Houston, Texas 77036 (US). **GILLEYLEN, Russ**; c/o National Oilwell Varco, L.P., 7909 Parkwood Circle Drive, Houston, Texas 77036 (US). **NEIL, Paul**; c/o National Oilwell Varco, L.P., 7909 Parkwood Circle Drive, Houston, Texas 77036 (US). **SCHEN, Aaron**; c/o National Oilwell Varco, L.P., 7909 Parkwood Circle Drive, Houston, Texas 77036 (US).

(74) Agent: **HOOPER, James, A.** et al.; Conley Rose, P.C., 575 N. Dairy Ashford Rd., Suite 1102, Houston, Texas 77079 (US).

(81) Designated States *(unless otherwise indicated, for every kind of national protection available)*: AE, AG, AL, AM, AO, AT, AU, AZ, BA, BB, BG, BH, BN, BR, BW, BY, BZ, CA, CH, CL, CN, CO, CR, CU, CZ, DE, DJ, DK, DM, DO, DZ, EC, EE, EG, ES, FI, GB, GD, GE, GH, GM, GT, HN, HR, HU, ID, IL, IN, IR, IS, JO, JP, KE, KG, KH, KN, KP, KR, KW, KZ, LA, LC, LK, LR, LS, LU, LY, MA, MD, ME, MG, MK, MN, MW, MX, MY, MZ, NA, NG, NI, NO, NZ, OM, PA, PE, PG, PH, PL, PT, QA, RO, RS, RU, RW, SA, SC, SD, SE, SG, SK, SL, SM, ST, SV, SY, TH, TJ, TM, TN, TR, TT, TZ, UA, UG, US, UZ, VC, VN, ZA, ZM, ZW.

(84) Designated States *(unless otherwise indicated, for every kind of regional protection available)*: ARIPO (BW, GH, GM, KE, LR, LS, MW, MZ, NA, RW, SD, SL, ST, SZ, TZ, UG, ZM, ZW), Eurasian (AM, AZ, BY, KG, KZ, RU, TJ, TM), European (AL, AT, BE, BG, CH, CY, CZ, DE, DK, EE, ES, FI, FR, GB, GR, HR, HU, IE, IS, IT, LT, LU, LV, MC, MK, MT, NL, NO, PL, PT, RO, RS, SE, SI, SK, SM, TR), OAPI (BF, BJ, CF, CG, CI, CM, GA, GN, GQ, GW, KM, ML, MR, NE, SN, TD, TG).

(54) Title: ROTARY STEERABLE DRILLING ASSEMBLY AND METHOD

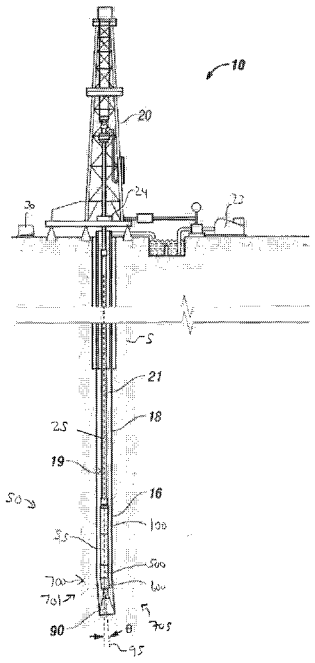

FIG 1

(57) Abstract: A rotary steerable drilling assembly for directional drilling includes a driveshaft rotatably disposed in a driveshaft housing, a bend adjustment assembly coupled to the driveshaft housing, a bearing mandrel coupled to the bend adjustment assembly, and a torque control assembly including a rotor configured to couple with a drill string, a stator assembly coupled to the downhole motor, and a torque control actuator assembly configured to control the amount of torque transmitted between the rotor and the stator assembly, wherein the bend adjustment assembly includes a first position providing a first deflection angle between a longitudinal axis of the driveshaft housing and a longitudinal axis of the bearing mandrel, wherein the bend adjustment assembly includes a second position providing a second deflection angle between the longitudinal axis of the driveshaft housing and the longitudinal axis of the bearing mandrel, the second deflection angle being different from the first deflection angle.

WO 2020/102310 A1

[Continued on next page]

Published:
— *with international search report (Art. 21(3))*
— *with amended claims (Art. 19(1))*

ROTARY STEERABLE DRILLING ASSEMBLY AND METHOD

CROSS-REFERENCE TO RELATED APPLICATIONS

[0001] The present application claims benefit of U.S. provisional patent application No. 62/760,115 filed November 13, 2018, and entitled "Rotary Steerable Drilling Assembly and Method" which is incorporated herein by reference in its entirety.

STATEMENT REGARDING FEDERALLY SPONSORED RESEARCH OR DEVELOPMENT

[0002] Not applicable.

BACKGROUND

[0003] In drilling a borehole into an earthen formation, such as for the recovery of hydrocarbons or minerals from a subsurface formation, it is typical practice to connect a drill bit onto the lower end of a drill string formed from a plurality of pipe joints connected together end-to-end, and then rotate the drill string so that the drill bit progresses downward into the earth to create a borehole along a predetermined trajectory. In addition to pipe joints, the drill string typically includes heavier tubular members known as drill collars positioned between the pipe joints and the drill bit. The drill collars increase the weight applied to the drill bit to enhance its operational effectiveness. Other accessories commonly incorporated into drill strings include stabilizers to assist in maintaining the desired direction of the drilled borehole, and reamers to ensure that the drilled borehole is maintained at a desired gauge (i.e., diameter). In vertical drilling operations, the drill string and drill bit are typically rotated from the surface with a top dive or rotary table. Drilling fluid or "mud" is typically pumped under pressure down the drill string, out the face of the drill bit into the borehole, and then up the annulus between the drill string and the borehole sidewall to the surface. The drilling fluid, which may be water-based or oil-based, is typically viscous to enhance its ability to carry borehole cuttings to the surface. The drilling fluid can perform various other valuable functions, including enhancement of drill bit performance (e.g., by ejection of fluid under pressure through ports in the drill bit, creating mud jets that blast into and weaken the underlying formation in advance of the drill bit), drill bit cooling, and formation of a protective cake on the borehole wall (to stabilize and seal the borehole wall).

[0004] In some applications, horizontal and other non-vertical or deviated boreholes are drilled (i.e., "directional drilling") to facilitate greater exposure to and production from larger regions of subsurface hydrocarbon-bearing formations than would be possible using only vertical boreholes. In directional drilling, specialized drill string components and "bottomhole assemblies" (BHAs) may be used to induce, monitor, and control deviations in the path of the drill bit, so as to produce a borehole of the desired deviated configuration. In some applications, directional drilling may be carried out using a downhole or mud motor provided in the BHA at the lower end of the drill string immediately above the drill bit. Downhole motors may include several components, such as, for example (in order, starting from the top of the motor): (1) a power section including a stator and a rotor rotatably disposed in the stator; (2) a driveshaft assembly including a driveshaft disposed within a housing, with the upper end of the driveshaft being coupled to the lower end of the rotor; and (3) a bearing assembly positioned between the driveshaft assembly and the drill bit for supporting radial and thrust loads. For directional drilling, the motor may include a bent housing to provide an angle of deflection between the drill bit and the BHA. Conventionally, orientation of the BHA in the borehole is typically controlled by manipulating the drill string at a surface drilling rig. Given that the drill string is typically held stationary (e.g., nonrotating relative to the borehole) as the downhole motor is operated during directional drilling, longitudinal friction resulting from sliding contact between the stationary drill string and a wall of the borehole may hinder the performance of the downhole motor in extended reach drilling applications.

[0005] In some applications, directional drilling may be carried out using a rotary steerable system (RSS) comprising tools that operate above the drill bit as completely independent tools controlled from the surface for manipulating the orientation of the BHA in situ within the borehole. The tools of the RSS are used to steer the drill string in a desired direction away from a vertical or other desired wellbore orientation, such as by means of steering pads or reaction members that exert lateral forces against the wellbore wall to deflect the drill bit relative to wellbore centerline. RSS tools may often include a hydraulic bias unit for controlling the orientation of the BHA, the hydraulic bias unit being driven by a downhole hydraulic pump that is powered by a downhole mud turbine or electric motor. RSS tools are often complex and expensive, and have limited run times due to battery and electronic limitations. These tools also may require the entire tool to be transported from the well site to a repair and maintenance

facility when parts of the tool break down. Further, many currently-used designs require large pressure drops across the tool for the tools to work well. Currently there is no easily separable interface between RSS control systems and formation-interfacing reaction members that would allow directional control directly at the bit

BRIEF SUMMARY OF THE DISCLOSURE

[0006] An embodiment of a rotary steerable drilling assembly for directional drilling comprises a driveshaft rotatably disposed in a driveshaft housing, a bend adjustment assembly coupled to the driveshaft housing, a bearing mandrel coupled to the bend adjustment assembly, and a torque control assembly comprising a rotor configured to couple with a drill string, a stator assembly coupled to the downhole motor, and a torque control actuator assembly configured to control the amount of torque transmitted between the rotor and the stator assembly, wherein the bend adjustment assembly includes a first position configured to provide a first deflection angle between a longitudinal axis of the driveshaft housing and a longitudinal axis of the bearing mandrel, and wherein the bend adjustment assembly includes a second position configured to provide a second deflection angle between the longitudinal axis of the driveshaft housing and the longitudinal axis of the bearing mandrel, the second deflection angle being different from the first deflection angle. In some embodiments, the torque control actuator assembly is configured to selectably adjust a restriction to a fluid flow along a circulation flowpath extending between the rotor and the stator assembly. In some embodiments, the torque control actuator assembly comprises a spool valve comprising a cylinder including a port and a piston slidably disposed in the cylinder, wherein the circulation flowpath extends through the port of the cylinder. In certain embodiments, the torque control actuator assembly comprises a rotary pilot valve rotatably disposed in a valve body, and an actuator coupled with the rotary pilot valve, wherein the actuator is configured to selectably rotate the rotary pilot valve relative to the valve body, and wherein the rotary pilot valve is configured to adjust an axial position of the piston of the spool valve in response to relative rotation between the rotary pilot valve and the valve body. In some embodiments, the stator assembly comprises an outer housing and an inner stator, and wherein the circulation flowpath extends between the outer housing and the inner stator. In some embodiments, the rotary steerable drilling assembly further comprises a bend adjustment actuator assembly configured to move the bend adjustment assembly between the first position

and the second position in response to a change in flowrate of a drilling fluid received by the downhole motor. In certain embodiments, the bend adjustment actuator assembly comprises a locker piston coupled to an actuator housing of the bend adjustment assembly, the locker piston comprising a first set of teeth, and a teeth ring coupled to the bearing mandrel, the teeth ring comprising a second set of teeth configured to matingly engage the first set of teeth and to transmit torque between the bearing mandrel and the actuator housing. In certain embodiments, the locker piston has a first end configured to receive fluid pressure equal to fluid pressure in the surrounding environment and a second end configured to receive fluid pressure equal to fluid pressure of the drilling fluid flowing through the bend adjustment assembly. In some embodiments, the bend adjustment assembly further comprises a locking piston that includes a locked position preventing actuation of the bend adjustment assembly between the first and second positions, and an unlocked position permitting actuation of the bend adjustment assembly between the first and second positions. In some embodiments, the bend adjustment assembly includes a third position that provides a third deflection angle between the longitudinal axis of the driveshaft housing and the longitudinal axis of the bearing mandrel, the third deflection angle being different from both the first deflection angle and the second deflection angle. In certain embodiments, the torque control assembly comprises a first mode configured to adjust an angular orientation of the drilling assembly within a wellbore; and a second mode configured to hold the angular orientation of the drilling assembly within the wellbore; wherein the torque control assembly is actuated between the first mode and the second mode in response to altering a rotational rate of the drill string. In certain embodiments, the torque control assembly comprises a third mode configured to restrict relative rotation between the rotor and the stator assembly, and wherein the torque control assembly is actuated into the third mode in response to altering the rotational rate of the drill string. In some embodiments, the torque control assembly is configured to actuate from the first mode to the second mode in response to the rotational rate of the drill string being increased from a first rotational rate to a second rotational rate that is greater than the first rotational rate; and actuate into the third mode in response to the rotational rate of the drill string being increased from to a third rotational rate that is greater than both the first rotational rate and the second rotational rate.

[0007] An embodiment of a drilling system for drilling a borehole that extends through a subterranean earthen formation comprises a drilling rig, a drill string extending from the drilling rig into the borehole, a drilling assembly coupled to an end of the drill string and comprising a driveshaft rotatably disposed in a driveshaft housing, a bend adjustment assembly coupled to the driveshaft housing, a bearing mandrel coupled to the bend adjustment assembly, a torque control assembly comprising a rotor configured to couple with a drill string, a stator assembly coupled to the downhole motor, and an actuator configured to control the amount of torque transmitted between rotor and the stator assembly, wherein the bend adjustment assembly includes a first position configured to provide a first deflection angle between a longitudinal axis of the driveshaft housing and a longitudinal axis of the bearing mandrel, and wherein the bend adjustment assembly includes a second position configured to provide a second deflection angle between the longitudinal axis of the driveshaft housing and the longitudinal axis of the bearing mandrel, the second deflection angle being different from the first deflection angle. In some embodiments, the torque control actuator assembly comprises a spool valve comprising a cylinder including a port and a piston slidably disposed in the cylinder, wherein the torque control actuator assembly is configured to selectably adjust a restriction to a fluid flow along a circulation flowpath extending between the rotor and the stator assembly and through the port of the cylinder. In some embodiments, the torque control actuator assembly comprises a rotary pilot valve rotatably disposed in a valve body, and an actuator coupled with the rotary pilot valve, wherein the actuator is configured to selectably rotate the rotary pilot valve relative to the valve body, wherein the rotary pilot valve is configured to adjust an axial position of the piston of the spool valve in response to relative rotation between the rotary pilot valve and the valve body. In certain embodiments, the torque control assembly comprises an electronics package that is in signal communication with the drilling rig via a telemetry system, and wherein the electronics package is configured to transmit a control signal to the actuator to control the rotation of the rotary pilot valve relative to the valve body. In certain embodiments, the stator assembly comprises an outer housing and an inner stator, and wherein the circulation flowpath extends between the outer housing and the inner stator. In some embodiments, the drilling assembly further comprises a bend adjustment actuator assembly configured to move the bend adjustment assembly between the first position and the second position in response to a change in flowrate of a drilling fluid received by the downhole motor. In

some embodiments, the bend adjustment actuator assembly comprises a locker piston coupled to an actuator housing of the bend adjustment assembly, the locker piston comprising a first set of teeth, and a teeth ring coupled to the bearing mandrel, the teeth ring comprising a second set of teeth configured to matingly engage the first set of teeth and to transmit torque between the bearing mandrel and the actuator housing. In certain embodiments, the bend adjustment assembly further comprises a locking piston that includes a locked position preventing actuation of the bend adjustment assembly between the first and second positions, and an unlocked position permitting actuation of the bend adjustment assembly between the first and second positions. In certain embodiments, the torque control assembly comprises a first mode configured to adjust an angular orientation of the drilling assembly within the wellbore; a second mode configured to hold the angular orientation of the drilling assembly; and a third mode configured to restrict relative rotation between the rotor and the stator assembly; wherein the torque control assembly is actuated between the first mode, the second mode, and the third mode in response to altering a rotational rate of the drill string. In some embodiments, the torque control assembly is configured to actuate from the first mode to the second mode in response to the rotational rate of the drill string being increased from a first rotational rate to a second rotational rate that is greater than the first rotational rate; and actuate into the third mode in response to the rotational rate of the drill string being increased from to a third rotational rate that is greater than both the first rotational rate and the second rotational rate.

[0008] An embodiment of a method for forming a deviated borehole comprises (a) transmitting torque between a rotor coupled to a drill string and a stator assembly of a drilling assembly to dispose the drilling assembly in a predetermined orientation, and (b) actuating a bend adjustment assembly of the drilling assembly from a first position providing a first deflection angle between a longitudinal axis of a driveshaft housing and a longitudinal axis of a bearing mandrel coupled to the driveshaft housing to a second position that provides a second deflection angle between the longitudinal axis of the driveshaft housing and the longitudinal axis of a bearing mandrel, the second deflection angle being different from the first deflection angle. In some embodiments, the method further comprises (c) transmitting a control signal from an electronics package of the drilling assembly to an actuator of the drilling assembly to adjust a restriction to a fluid flow along a circulation flowpath extending between the rotor and the stator assembly. In some embodiments, the method further comprises (c) rotating

a rotary pilot valve of the drilling assembly to adjust a position of a piston of a spool valve of the drilling assembly to adjust a restriction to a fluid flow along a circulation flowpath extending between the rotor and the stator assembly. In certain embodiments, (b) comprises (b1) ceasing the pumping of drilling fluid into the borehole from the surface pump for a first time period, and (b2) following the first time period, pumping drilling fluid into the borehole from the surface pump at a first flowrate that is less than the drilling flowrate for a second time period. In certain embodiments, (a) comprises rotating the drill string at a first rotational rate. In some embodiments, the method further comprises (c) holding the drilling assembly in the predetermined angular orientation by increasing a rotational rate of the drill string from the first rotational rate to a second rotational rate that is greater than the first rotational rate; and (d) restricting relative rotation between the rotor and the stator assembly by increasing the rotational rate of the drill string to a third rotational rate that is greater than both the first rotational rate and the second rotational rate. In some embodiments, (c) comprises saving an angular orientation datum in a memory of the drilling assembly in response to holding the drilling assembly in the predetermined angular orientation for a predefined wait period.

[0009] Embodiments described herein comprise a combination of features and characteristics intended to address various shortcomings associated with certain prior devices, systems, and methods. The foregoing has outlined rather broadly the features and technical characteristics of the disclosed embodiments in order that the detailed description that follows may be better understood. The various characteristics and features described above, as well as others, will be readily apparent to those skilled in the art upon reading the following detailed description, and by referring to the accompanying drawings. It should be appreciated that the conception and the specific embodiments disclosed may be readily utilized as a basis for modifying or designing other structures for carrying out the same purposes as the disclosed embodiments. It should also be realized that such equivalent constructions do not depart from the spirit and scope of the principles disclosed herein.

BRIEF DESCRIPTION OF THE DRAWINGS

[0010] For a detailed description of disclosed embodiments, reference will now be made to the accompanying drawings in which:

[0011] Figure 1 is a schematic partial cross-sectional view of a well system including an embodiment of a downhole mud motor in accordance with principles disclosed herein;

[0012] Figure 2 is a perspective, partial cut-away view of the power section of Figure 1;

[0013] Figure 3 is a cross-sectional end view of the power section of Figure 1;

[0014] Figure 4 is a side view of an embodiment of a torque control assembly of the drilling system of Figure 1 in accordance with principles disclosed herein;

[0015] Figure 5 is a side cross-sectional view of the torque control assembly of Figure 4;

[0016] Figure 6 is a side cross-sectional view of an embodiment of a slipping joint of the torque control assembly of Figure 4 in accordance with principles disclosed herein;

[0017] Figure 7 is a side cross-sectional view of an embodiment of a positive displacement pump of the torque control assembly of Figure 4 in accordance with principles disclosed herein;

[0018] Figure 8 is a side cross-sectional view of an embodiment of an actuator assembly of the torque control assembly of Figure 4 in accordance with principles disclosed herein;

[0019] Figures 9 and 10 are perspective views of the actuator assembly of Figure 8;

[0020] Figures 11 and 12 are perspective views of an embodiment of a valve block of the actuator assembly of Figure 8 in accordance with principles disclosed herein;

[0021] Figures 13 and 14 are perspective views of an embodiment of a spool valve of the actuator assembly of Figure 8 in accordance with principles disclosed herein;

[0022] Figure 15 is a zoomed-in, side cross-sectional view of the actuator assembly of Figure 8;

[0023] Figure 16 is a side cross-sectional view of an embodiment of an electronics sub of the torque control assembly of Figure 4 in accordance with principles disclosed herein;

[0024] Figure 17 is a perspective view of the electronics sub of Figure 16;

[0025] Figure 18 is a side view of an embodiment of a mud motor of Figure 1 disposed in a first position, Figure 18 illustrating a driveshaft assembly, a bearing assembly, and a bend adjustment assembly of the mud motor of Figure 1 in accordance with principles disclosed herein;

[0026] Figure 19 is a side cross-sectional view of the mud motor of Figure 18 disposed in the first position;

[0027] Figure 20 is a zoomed-in, side cross-sectional view of the bearing assembly of Figure 18;

[0028] Figure 21 is a zoomed-in, side cross-sectional view of the bend adjustment assembly of Figure 18;

[0029] Figure 22 is a zoomed-in, side cross-sectional view of an embodiment of an actuator assembly of the bearing assembly of Figure 18 in accordance with principles disclosed herein;

[0030] Figure 23 is a perspective view of an embodiment of a lower offset housing of the bend adjustment assembly of Figure 18;

[0031] Figure 24 is a cross-sectional view of the mud motor of Figure 18 along line 24-24 of Figure 22;

[0032] Figure 25 is a perspective view of an embodiment of a locking piston of the bend adjustment assembly of Figure 18 in accordance with principles disclosed herein;

[0033] Figures 26 and 27 are perspective views of an embodiment of a lower adjustment mandrel of the bend adjustment assembly of Figure 18 in accordance with principles disclosed herein;

[0034] Figure 28 is a perspective view of an embodiment of an actuator piston of the actuator assembly of Figure 22 in accordance with principles disclosed herein;

[0035] Figure 29 is a perspective view of an embodiment of a torque transmitter of the actuator assembly of Figure 22 in accordance with principles disclosed herein;

[0036] Figures 30 and 31 are side views of the bend adjustment assembly of Figure 18;

[0037] Figures 32 and 33 are side cross-sectional views of the bend adjustment assembly of Figure 18;

[0038] Figure 34 is another zoomed-in, side cross-sectional view of the actuator assembly of Figure 22; and

[0039] Figures 35 and 36 are zoomed-in, side cross-sectional views of the bend adjustment assembly of Figure 18.

DETAILED DESCRIPTION OF DISCLOSED EXEMPLARY EMBODIMENTS

[0040] The following discussion is directed to various embodiments. However, one skilled in the art will understand that the examples disclosed herein have broad application, and that the discussion of any embodiment is meant only to be exemplary of that embodiment, and not intended to suggest that the scope of the disclosure, including the claims, is limited to that embodiment. The drawing figures are not

necessarily to scale. Certain features and components herein may be shown exaggerated in scale or in somewhat schematic form and some details of conventional elements may not be shown in interest of clarity and conciseness.

[0041] In the following discussion and in the claims, the terms "including" and "comprising" are used in an open-ended fashion, and thus should be interpreted to mean "including, but not limited to… ." Also, the term "couple" or "couples" is intended to mean either an indirect or direct connection. Thus, if a first device couples to a second device, that connection may be through a direct connection, or through an indirect connection as accomplished via other devices, components, and connections. In addition, as used herein, the terms "axial" and "axially" generally mean along or parallel to a central axis (e.g., central axis of a body or a port), while the terms "radial" and "radially" generally mean perpendicular to the central axis. For instance, an axial distance refers to a distance measured along or parallel to the central axis, and a radial distance means a distance measured perpendicular to the central axis. Any reference to up or down in the description and the claims is made for purposes of clarity, with “up”, “upper”, “upwardly”, “uphole”, or “upstream” meaning toward the surface of the borehole and with “down”, “lower”, “downwardly”, “downhole”, or “downstream” meaning toward the terminal end of the borehole, regardless of the borehole orientation.

[0042] Referring to Figure 1, an embodiment of a well or drilling system 10 is shown. Drilling system 10 is generally configured for drilling a borehole 16 in an earthen formation 5. In the embodiment of Figure 1, drilling system 10 includes a drilling rig 20 disposed at the surface, a drill string 21 extending downhole from rig 20, a rotary steerable drilling assembly 50 coupled to the lower end of drill string 21, and a drill bit 90 attached to the lower end of drilling assembly 50. A surface or mud pump 23 is positioned at the surface and pumps drilling fluid or mud through drill string 21. Additionally, rig 20 includes a rotary system 24 for imparting torque to an upper end of drill string 21 to thereby rotate drill string 21 in borehole 16. In this embodiment, rotary system 24 comprises a rotary table located at a rig floor of rig 20; however, in other embodiments, rotary system 24 may comprise other systems for imparting rotary motion to drill string 21, such as a top drive.

[0043] In this embodiment, drilling assembly 50 comprises a torque control assembly 100 coupled to a lower end of drill string 21 and generally configured to control the orientation of drilling assembly 50. Particularly, as will be discussed further herein,

torque control assembly 100 permits drilling assembly 50 to hold a desired orientation or "tool face" within borehole 16 as drill string 21 is rotated at the surface by rotary system 24, thereby reducing longitudinal friction between drill string 21 and a wall 19 of borehole 16 during directional drilling. In this embodiment, drilling assembly 50 also includes a downhole mud motor 55 coupled to a lower end of torque control assembly 100 for facilitating the drilling of deviated portions of borehole 16. Moving downward along drilling assembly 50, motor 55 includes a hydraulic drive or power section 60, a driveshaft assembly 500, and a bearing assembly 600. In some embodiments, the portion of drilling assembly 50 disposed between drill string 21 and motor 55 can include other components, such as drill collars, measurement-while-drilling (MWD) tools, reamers, stabilizers and the like. In this embodiment, drilling system 10 includes a telemetry system 30 configured for transmitting signals and data between drilling assembly 50 disposed in borehole 16 and the surface. In some embodiments, telemetry system 30 may communicate with components of drilling assembly 50 electrically via wired drill pipe (WDP) joints of drill string 21; however, in other embodiments, telemetry system may communicate with components of drilling assembly 50 via pressure pulses transmitted through borehole 16.

[0044] Power section 60 of drilling assembly 50 converts the fluid pressure of the drilling fluid pumped downward through drill string 21 into rotational torque for driving the rotation of drill bit 90. Driveshaft assembly 500 and bearing assembly 600 transfer the torque generated in power section 60 to bit 90. With force or weight applied to the drill bit 90, also referred to as weight-on-bit ("WOB"), the rotating drill bit 90 engages the earthen formation and proceeds to form borehole 16 along a predetermined path toward a target zone. The drilling fluid or mud pumped down the drill string 21 and through drilling assembly 50 passes out of the face of drill bit 90 and back up the annulus 18 formed between drill string 21 and the wall 19 of borehole 16. The drilling fluid cools the bit 90, and flushes the cuttings away from the face of bit 90 and carries the cuttings to the surface.

[0045] Referring to Figures 1-3, an embodiment of the power section 60 of drilling assembly 50 is shown schematically in Figures 2 and 3. In the embodiment of Figures 2 and 3, power section 60 comprises a helical-shaped rotor 70 disposed within a stator 80 comprising a cylindrical stator housing 85 lined with a helical-shaped elastomeric insert 81. Helical-shaped rotor 70 defines a set of rotor lobes 77 that intermesh with a

set of stator lobes 87 defined by the helical-shaped insert 81. As best shown in Figure 3, the rotor 70 has one fewer lobe 77 than the stator 80. When the rotor 70 and the stator 80 are assembled, a series of cavities 89 are formed between the outer surface 73 of the rotor 70 and the inner surface 83 of the stator 80. Each cavity 89 is sealed from adjacent cavities 89 by seals formed along the contact lines between the rotor 70 and the stator 80. The central axis 78 of the rotor 70 is radially offset from the central axis 88 of the stator 80 by a fixed value known as the "eccentricity" of the rotor-stator assembly. Consequently, rotor 70 may be described as rotating eccentrically within stator 80.

[0046] During operation of the power section 60, fluid is pumped under pressure into one end of the power section 60 where it fills a first set of open cavities 89. A pressure differential across the adjacent cavities 89 forces the rotor 70 to rotate relative to the stator 80. As the rotor 70 rotates inside the stator 80, adjacent cavities 89 are opened and filled with fluid. As this rotation and filling process repeats in a continuous manner, the fluid flows progressively down the length of hydraulic drive section 80 and continues to drive the rotation of the rotor 70. Driveshaft assembly 500 shown in Figure 1 includes a driveshaft discussed in more detail below that has an upper end coupled to the lower end of rotor 70. In this arrangement, the rotational motion and torque of rotor 70 is transferred to drill bit 90 via driveshaft assembly 500 and bearing assembly 600.

[0047] Referring to Figures 1 and 4-17, an embodiment of torque control assembly 100 of the well system of Figure 1 is shown in Figures 4-17. In the embodiment of Figures 4-17, torque control assembly 100 has a central or longitudinal axis 105 and generally includes (moving from an uphole end of torque control assembly 100 to a downhole end of assembly 100) a slipping joint 102, a positive displacement pump 140, an actuator assembly 200, and an electronics sub 400. As described above, torque control assembly 100 is generally configured to control an angular orientation of drilling assembly 50 in borehole 16. In other words, torque control assembly is configured to control the angular orientation of drilling assembly 50 respective the central axis 105 of torque control assembly 100. As will be described further herein, torque control assembly 100 is configured to selectably control the amount of torque transmitted between slipping joint 102, which is positioned at an upper end of torque control assembly 100 and coupled to a lower end of drill string 21, and the electronics sub 400 positioned at a lower end of torque control assembly 100.

[0048] As shown particularly in Figure 6, in this embodiment, slipping joint 102 of the torque control assembly 100 generally includes an outer housing 110, a mandrel 120 rotatably disposed in housing 110, and a first or upper flex shaft 130 coupled to mandrel 120 and rotatably disposed in housing 110. Housing 110 has a linear central or longitudinal axis disposed coaxial with the central axis 105 of torque control assembly 100. In this embodiment, outer housing 110 comprises an upper housing joint 110A, a pair of intermediate housing joints 110B and 110C, and a lower housing joint 110D, where a central throughbore or passage extends through each of housing joints 110A-110D. Housing joints 110A-110D are coupled together at releasable or threaded connections 112 formed therebetween, where threaded connections 112 each comprise a sealed connection restricting fluid communication thereacross. Although in this embodiment housing 110 comprises a plurality of releasably coupled housing joints 110A-110D, in other embodiments, housing 110 may comprise a single, monolithically formed housing.

[0049] In this embodiment, bearing mandrel 120 of slipping joint 102 has a first or upper end 120A, a second or lower end 120B, and a central through passage 121 extending axially from lower end 120B and terminating axially below upper end 120A. The upper end 120A of bearing mandrel 120 is coupled to the lower end of drill string 21 while the lower end 120B is directly coupled to upper flex shaft 130. Upper flex shaft 130 of slipping joint 102 comprises a first or upper end 130A, a second or lower end 130B opposite upper end 130A, and a central passage 131 extending between ends 130A and 130B. The upper end 130A of upper flex shaft 130 is threadably coupled to the lower end 120B of mandrel 120. In this embodiment, bearing mandrel 120 includes a plurality of circumferentially spaced lubrication ports 122 extending radially to the outer surface of mandrel 120. In this arrangement, lubrication ports 122 are separated or sealed from central passage 121 of mandrel 120 by an annular first or upper floating piston 123 that is pressure balanced with the surrounding environment via a radial port 124 formed in mandrel 120 proximal upper end 120A. Particularly, upper floating piston includes an outer annular seal that sealingly engages an inner surface of central passage 121 and an inner annular seal that sealingly engages a first or upper sleeve 125 positioned in central passage 121 of mandrel 120. During drilling operations, mandrel 120 is rotated about central axis 105 relative to housing 110 and drilling fluid flows through central passage 121 of mandrel 120.

Thus, mandrel 120 is permitted to rotate freely about central axis 105 relative to housing 110.

[0050] Housing 110 has a central bore or passage defined by a generally cylindrical inner surface 111 that extends between ends 110A and 110B. An annular seal 113 is positioned on the inner surface 111 of housing 110 proximal upper end 110A in sealing engagement with an outer surface of mandrel 120. In this arrangement, an annular sealed chamber 114 is formed radially between inner surface 111 and the outer surface of bearing mandrel 120, the sealed chamber 114 extending into the annular space (via lubrication ports 122) formed between the inner surface of mandrel 120 and the outer surface of central sleeve 124 that is sealed from the flow of drilling fluid through passage 121 via the annular seals of upper floating piston 123.

[0051] In this embodiment, slipping joint 102 includes a first or upper radial bearing 126A, a thrust bearing assembly 128, and a second or lower radial bearing 126B, each of which are disposed in sealed chamber 114. Upper radial bearing 126A is disposed about mandrel 120 and axially positioned above thrust bearing assembly 128, and lower radial bearing 126B is disposed about mandrel 120 and axially positioned below thrust bearing assembly 128. In general, radial bearings 126A and 126B permit rotation of mandrel 120 relative to housing 110 while simultaneously supporting radial forces therebetween. In this embodiment, radial bearings 126A and 126B each comprise sleeve type bearings that slidingly engage the outer surface of mandrel 120. However, in general, any suitable type of radial bearing(s) may be employed including, without limitation, needle-type roller bearings, radial ball bearings, or combinations thereof.

[0052] The thrust bearing assembly 128 of slipping joint 102 is disposed about mandrel 120 and permits rotation of mandrel 120 relative to housing 110 while simultaneously supporting axial loads in both directions (e.g., off-bottom and on-bottom axial loads). In this embodiment, thrust bearing assembly 128 generally comprises a pair of caged roller bearings and corresponding races, with the central race threadedly engaged to bearing mandrel 120. In other embodiments, one or more other types of thrust bearings may be included in slipping joint 102, including ball bearings, planar bearings, etc. In still other embodiments, the thrust bearing assemblies of slipping joint 102 may be disposed in the same or different thrust bearing chambers (e.g., two-shoulder or four-shoulder thrust bearing chambers).

[0053] In this embodiment, radial bearings 126A, 162B, and thrust bearing assembly 128 are oil-sealed bearings. Particularly, sealed chamber 114 comprises an oil or lubricant filled chamber that is pressure compensated via upper floating piston 123. Additionally, slipping joint 102 comprises a second or lower sleeve 132 disposed about upper flex shaft 130 and coupled to the inner surface 111 of housing 110. Lower sleeve 132 includes an annular seal 134 that sealingly engages the inner surface 111 of housing 110 and a radial port 135 in fluid communication with sealed chamber 114. An annular second or lower floating piston 136 is positioned radially between the inner surface 111 of housing 110 and an outer surface of lower sleeve 132, where lower floating piston 136 includes a radially outer seal that sealingly engages the inner surface 111 of housing 110 and a radially inner seal that sealingly engages the outer surface of lower sleeve 132.

[0054] In the configuration described above, an annular expansion chamber 137 is formed between the inner surface 11 of housing 110 and the outer surface of lower sleeve 132, the expansion chamber 137 extending axially between lower floating piston 136 and the seal 134 of lower sleeve 132. Expansion chamber 137 is configured to allow for the thermal expansion of oil disposed within sealed chamber 114, and in some embodiments, may be filled with a compressible fluid. Thus, in response to thermal expansion of oil disposed in sealed chamber 114, a portion of the oil in sealed chamber 114 may flow into the annulus disposed between housing 110 and lower sleeve 132 via port 135 of lower sleeve 132. As previously described, in this embodiment, bearings 126A, 126B, and 128 are each oil-sealed. However, in other embodiments, the bearings of slipping joint 102 may be mud lubricated.

[0055] As shown particularly in Figures 6-8, the positive displacement pump 140 of torque control assembly 100 generally includes a stator assembly 142, a helical-shaped rotor 170 rotatably disposed in stator assembly 142, and a second or lower flex shaft 180 coupled with rotor 170 and rotatably disposed in stator assembly 142. Stator assembly 142 and rotor 170 each include a central or longitudinal axis disposed coaxially with central axis 105 of torque control assembly 100. In this embodiment, stator assembly 142 comprises a double-wall stator including an outer housing 144 and an inner stator 150 disposed within outer housing 144. The ends 144A and 144B of outer housing 144 are each sealingly coupled to stator 150 at sealed connections 143. An annulus 146 is formed radially between outer housing 144 and stator 150, annulus 146 extending between the ends 144A and 144B of outer housing 144.

[0056] The stator 150 of stator assembly 142 has a first or upper end 150A, a second or lower end 150B opposite upper end 150A, and a central bore or passage 152 extending between ends 150A and 150B. The upper end 150A of stator 150 is coupled to a lower end to the lower housing joint 110D of slipping joint 102 at a sealed, threaded connection 112. In this embodiment, stator 150 includes a first or upper radial port 154A located proximal the upper end 150A of stator 150 and a second or lower radial port 154B axially spaced from upper radial port 150A. Ports 154A and 154B provide for fluid communication between annulus 146 and the central passage 152 of stator 150, where central passage 152 comprises a portion of the sealed chamber 114. Stator 150 of stator assembly 142 includes an inner surface 155 that defines a set of stator lobes 156 positioned between radial ports 154A and 154B.

[0057] Rotor 170 of the positive displacement pump 140 has a first or upper end 170A, a second or lower end 170B opposite upper end 170A, and a central bore or passage 172 extending between ends 170A and 170B. The upper end 170A of rotor 170 is coupled to the lower end 130B of upper flex shaft 130 at a sealed, threaded connection 133, the central passage 172 of rotor 170 being in fluid communication with the central passage 131 of upper flex shaft 130. An outer surface 175 of rotor 170 defines a set of rotor lobes 174 that intermesh with the stator lobes 156 of stator 150. In this embodiment, rotor 170 has one fewer lobe 174 than stator 150. When the rotor 170 and the stator 150 are assembled, a series of cavities 176 are formed between the outer surface 175 of the rotor 170 and the inner surface 155 of the stator 150. Each cavity 176 is sealed from adjacent cavities 176 by seals formed along the contact lines between the rotor 170 and the stator 150.

[0058] Lower flex shaft 180 of the positive displacement pump 140 has a has a first or upper end 180A, a second or lower end 180B opposite upper end 180A, and a central bore or passage 182 extending between ends 180A and 180B. The upper end 180A of lower flex shaft 180 is coupled to the lower end 170B of rotor 170 at a sealed, threaded connection 133, the central passage 182 of lower flex shaft 180 being in fluid communication with the central passage 172 of rotor 170. During operation of the positive displacement pump 140, rotor 170 may be rotated relative stator 150 about central axis 105 by drill string 21 (drill string 21 rotated at the surface by rotary system 24), rotor 170 being coupled to drill string 21 via mandrel 120 and flex shaft 130 of slipping joint 102. The rotation of rotor 170 within stator 150 creates a pressure differential across rotor 170, forcing fluid disposed in positive displacement pump 140

along a pumping or circulation flowpath (indicated by arrows 178 in Figure 7) through the central passage 154 and radial ports 154A, 154B of stator 150, and the annulus 146 formed between outer housing 144 and stator 150.

[0059] Additionally, a flow restriction along circulation flowpath 178 results in torque applied to rotor 170 from drill string 21 being transferred to stator assembly 142, where the amount of torque transfer between rotor 170 and stator assembly 142 is proportionate to the degree of flow restriction along circulation flowpath 178. Actuator assembly 200 of torque control assembly 100 is configured to selectably control the degree of restriction to fluid flow along circulation flowpath 178, controlling in-turn the amount of torque transferred between the rotor 170 and stator assembly 142 of the positive displacement pump 140. As shown particularly in Figures 8-15, in this embodiment, actuator assembly 200, received in stator 150 axially below rotor 170, generally includes an annular hub 202, a mandrel 210, a valve housing or block 220, a plurality of circumferentially spaced spool valves 240, a pilot valve body 260, a rotary control or pilot valve 280, a connector body 310, a motor housing 330, and an electric motor or actuator 350.

[0060] In this embodiment, hub 202 of actuator assembly 200 has a first or upper end 202A, a second or lower end 202B opposite upper end 202A, and a generally cylindrical outer surface extending between ends 202A, 202B that receives an annular seal 203 in sealing engagement with the inner surface 155 of stator 150. The sealing engagement between seal 203 and the inner surface 155 of stator 150 forms an annular actuation chamber 215 extending between seal 203 and the lower end 150B of stator 150. Particularly, fluid flowing along circulation flowpath 178 in sealed chamber 114 may not directly enter lower radial port 154B of stator 150, and instead, must flow though actuator assembly 200 (as will be described further herein) to enter actuation chamber 215, where the fluid may then flow through lower radial port 154B, continuing along circulation flowpath 178 in annulus 146.

[0061] Hub 202 also includes a central bore or passage 205 through which lower flex shaft 180 extends. Hub 202 further includes a plurality of circumferentially spaced valve ports 206, a sensor port 207, and a pressure relief port 208 (shown in Figures 9 and 10). Each of ports 206, 207, and 208 extend axially between upper end 202A and lower end 202B of hub 202. In this embodiment, each of the valve ports 206 of hub 202 receive a screen 209 for filtering out materials entrained in the fluid flowing along circulation flowpath 178 and into actuator assembly 200. Mandrel 210 of actuator

assembly 200 is generally cylindrical comprising a central bore or passage 211 through which lower flex shaft 180 extends, and a generally cylindrical outer surface 212 extending between opposing ends of mandrel 210. The outer surface 212 of mandrel 210 receives a first or upper annular seal 214A that sealingly engages an inner surface of hub 202, and a second or lower annular seal 214B that sealingly engages an inner surface of the motor housing 330.

[0062] As shown particularly in Figures 11 and 12, the valve block 220 of actuator assembly 200 has a first or upper end 220A, a second or lower end 220B, a central bore or passage 222 extending between ends 220A and 220B, and a generally cylindrical outer surface 223 extending between ends 220A and 220B. Valve block 220 additionally includes a plurality of circumferentially spaced valve ports 224 and a sensor port 226, each of which extend between ends 220A and 220B of valve block 220. Valve block 220 further includes a first slot 228 extending axially into valve block 220 from upper end 220A, and a circumferentially spaced second slot 230 also extending into valve block 220 from upper end 220A. Valve body 260 of actuator assembly 200 is received in first slot 228. A passage 231 aligned with the first slot 228 extends axially through a shoulder 229 defining a terminal end of the first slot 228. In this embodiment, valve block 220 includes an arcuate groove 232 formed on the lower end 220B of valve block 220, the arcuate groove 232 intersecting each of the valve ports 224 and terminating at a third slot 234 that is circumferentially aligned with first slot 228 and extends axially into valve block 220 from the lower end 220B. Valve body 260 extends through the third slot 234 and passage 231 formed in valve block 220.

[0063] As shown particularly in Figures 13 and 14, each spool valve 240 of actuator assembly 200 includes an outer cylinder 242 and an inner piston 250 slidably received in the cylinder 242. Cylinder 242 includes a first or upper end 242A, a second or lower end 242B opposite upper end 242A, a central passage 244 extending between ends 242A, 242B, and a generally cylindrical outer surface 246 extending between ends 242A, 242B. Additionally, cylinder 242 includes a plurality of circumferentially spaced elongate slots or ports 248 each extending radially between outer surface 246 and central passage 244. Each port 248 of cylinder 242 includes a substantially rectangular cross-section having a length extending between ends 242A, 242B of cylinder 242 that is greater than an arcuate width (extending about a central axis of cylinder 242) of the port 248.

[0064] Piston 250 includes a first or upper end 250A slidably received in the central passage 244 of cylinder 242, a second or lower end 250B opposite upper end 250A and spaced from central passage 244, a central passage 252 extending between ends 250A, 250B, and a generally cylindrical outer surface 254 extending between ends 250A, 250B that is in sealing engagement with an inner surface of cylinder 242. The central passage 252 of piston 250 includes an orifice or flow restrictor 256 that provides a flow restriction for fluid flowing through central passage 244 of cylinder 242 and into central passage 252 of piston 250 via orifice 256. Piston 250 is configured to adjust and/or restrict fluid flow between central passage 244 of cylinder 242 and the ports 248. Particularly, fluid flow between central passage 244 and ports 248 is restricted when the outer surface 254 of piston 250 covers the entirety of ports 248, as shown in Figures 13 and 14. However, as will be described further herein, by displacing piston 250 axially relative cylinder 242, a portion or the entirety of ports 248 may be uncovered to permit fluid flow between central passage 244 and ports 248. Particularly, by displacing the lower end 250B of piston 250 axially away from the lower end 242B of cylinder 242, the fluid cross-sectional flow area provided by ports 248 may be increased as more of the longitudinal length of each port 248 is uncovered from piston 250, thereby reducing the restriction to fluid flow between central passage 244 and ports 248.

[0065] When actuator assembly 200 is assembled, the upper end 242A of cylinder 242 is received in one of the valve ports 206 of hub 202 with the outer surface 246 of cylinder 242 in sealing engagement with an inner surface of the valve port 206 in which the cylinder 242 is received. Additionally, the lower end 242B of cylinder 242 is received in one of the valve ports 224 of valve block 220 with the outer surface 246 of cylinder 242 in sealing engagement with an inner surface of the valve port 224 in which the cylinder 242 is received. The ports 248 of each cylinder 242 is positioned axially between the lower end 202B of hub 202 and the upper end 220A of valve block 220 in fluid communication with actuation chamber 215.

[0066] As described above, the axial position of the piston 250 of each spool valve 240 may be manipulated relative to its corresponding cylinder 242 to increase or reduce a restriction to fluid flow between the central passage 244 and ports 248 of the cylinder 242. In this manner, a flow restriction for fluid flowing between sealed chamber 114 and actuation chamber 214 via central passage 244 and ports 248 of each spool valve 240 may be increased or decreased. Moreover, fluid flow between sealed chamber

114 and actuation chamber 214 may be substantially eliminated by disposing each spool valve 240 in a fully closed position as shown in Figures 13 and 14. Thus, the axial position of the piston 250 of each spool valve 240 relative to its corresponding cylinder 242 may be adjusted to thereby adjust the restriction to fluid flowing along circulation flowpath 178. Thus, by increasing the portion of ports 248 of cylinder 242 covered by the piston 250 of each spool valve 240, the amount of torque transferred between rotor 170 and stator assembly 142 may be increased. By covering the entirety of each port 248 of the cylinder 242 with the corresponding piston 250, the substantial entirety of torque applied to rotor 170 by drill string 21 may be transferred to stator assembly 142. Alternatively, by increasing the portion of ports 248 of cylinder 242 covered by the piston 250 of each spool valve 240, the amount of torque transferred between rotor 170 and stator assembly 142 may be decreased. By exposing the entirety of each port 248 to the central passage 244 of the cylinder 242 (i.e., disposing the spool valve 240 in a fully open position), substantially zero torque applied to rotor 170 by drill string 21 may be transferred to stator assembly 142.

[0067] As shown particularly in Figure 15, the valve body 260 of actuator assembly 200 has a first or upper end 260A, a second or lower end 260B opposite upper end 260A, and a central passage 262 extending between ends 260A, 260B that receives rotary pilot valve 280, and an outer surface 264 extending between ends 260A, 260B. Valve body 260 is coupled to connector body 310 to secure or affix its axial position relative to valve block 220. In this embodiment, valve body 260 includes a plurality of circumferentially spaced inlet ports 266 each extending radially between central passage 262 and outer surface 264. Additionally, valve body 260 includes an arcuate outlet slot or port 268 also extending radially between central passage 262 and outer surface 264, where outlet port 268 is in fluid communication with actuation chamber 215. Particularly, outlet port 268 is axially spaced from inlet ports 266 and extends across a portion of the circumference of the outer surface 264 of valve body 260. In this embodiment, outlet port 268 extends approximately 180 degrees about a central axis of valve body 260; however, in other embodiments, the arcuate length of outlet port 268 may vary. As shown particularly in Figures 9 and 15, in this embodiment, actuator assembly 200 comprises a retainer housing 270 that is disposed directly adjacent the upper end 260A of valve body 260 and is coupled to the shoulder 229 of valve block 220.

[0068] As shown particularly in Figure 15, the rotary pilot valve 280 of actuator assembly 200 is rotatably disposed in valve body 260 and has a first or upper end 280A, a second or lower end 280B opposite upper end 280A, and a generally cylindrical outer surface 282 extending between ends 280A and 280B. Additionally, rotary pilot valve 280 includes a central passage 284 extending partially between ends 280A and 280B. A plurality of circumferentially spaced inlet ports 286 are positioned at a lower end of central passage 284, each inlet port 286 extending radially between central passage 284 and the outer surface 282 of rotary pilot valve 280. Additionally, rotary pilot valve 280 includes an arcuate outlet slot or port 288 also extending radially between central passage 284 and outer surface 282. Particularly, outlet port 288 is positioned at an upper end of central passage 284 and extends across a portion of the circumference of the outer surface 282 of rotary pilot valve 280. In this embodiment, outlet port 288 extends approximately 180 degrees about a central axis of rotary pilot valve 280; however, in other embodiments, the arcuate length of outlet port 288 may vary. In this embodiment, the upper end 280A of rotary pilot valve 280 is coupled to a retainer 272 received in retainer housing 270. Retainer 272 is configured to act as an adjustable spacer to provide for the axial alignment of inlet ports 286 of rotary pilot valve 280 with the inlet ports 266 of valve body 260, and for the axial alignment of outlet port 288 of rotary pilot valve 280 with the outlet port 268 of valve body 260. Additionally, in this embodiment, retainer 272 comprises a thrust bearing assisting the relative rotation between rotary pilot valve 280 and valve body 260.

[0069] The outer surface 282 of rotary pilot valve 280 is in sealing engagement with the inner surface 262 of valve body 260, thereby restricting fluid flow between inlet ports 266 of valve body 260 and outlet port 268 via the annular interface formed between the outer surface 282 of rotary pilot valve 280 and the inner surface 262 of valve body 260. Fluid flow is permitted between inlet ports 268 of valve body 260 and the central passage 284 of rotary pilot valve 280 via inlet ports 286 of rotary pilot valve 280. Rotary pilot valve 280 may be rotated in valve body 260 between a fully open position (shown in Figure 15) where outlet port 288 is angularly or circumferentially aligned with outlet port 268 of valve body 260, and a fully closed position where outlet port 288 is entirely angularly or circumferentially spaced from outlet port 268 of valve body 260.

[0070] Fluid flow between inlet ports 266 and outlet port 268 of valve body 260 is restricted when rotary pilot valve 280 is in the fully closed position. However, fluid flow

between inlet ports 266 and outlet port 268 of valve body 260 when rotary pilot valve 280 is in a partially or fully open position via angular overlap between the outlet port 288 of rotary pilot valve 280 and outlet port 268 of valve body 260. Additionally, as rotary pilot valve 280 is rotated from the fully closed position to the fully open position, the degree of circumferential overlap between outlet port 288 of rotary pilot valve 280 and the outlet port 268 of valve body 260 increases, thereby increasing the cross-sectional flow area between central passage 284 of rotary pilot valve 280 and the outlet port 268 of valve body 260. Further, the restriction to fluid flow between inlet ports 266 and outlet port 268 of valve body 260 decreases as the cross-sectional flow area between central passage 284 and outlet ports 268 increases. Thus, the restriction to fluid flow between inlet ports 266 and outlet port 268 of valve body 260 continually decreases as rotary pilot valve 280 is rotated from the fully closed position to the fully open position.

[0071] As shown particularly in Figures 8 and 15, connector body 310 of actuator assembly 200 has a first or upper end 310A, a second end 310B opposite upper end 310A, a central passage 312 extending between ends 310A and 310B, and a generally cylindrical outer surface 314 extending between ends 310A and 310B. Central passage 312 of connector body 310 is in fluid communication with the central passage 222 of valve block 220, and the upper end 310A of connector body 310 is in sealing engagement with the lower end 220B of valve block 220. In this embodiment, an annular shroud 290 is disposed about the lower end 220B of valve block 220 and the upper end 310A of connector body 310, shroud 290 having an annular inner surface in sealing engagement with the outer surface 223 of valve block 220 and the outer surface 314 of connector body 310. The sealing engagement between shroud 290, valve bock 220 and connector body 310 forms an arcuate passage 315 that is partially defined by the arcuate groove 232 of valve block 220, where arcuate passage 315 is sealed from actuation chamber 215. Thus, fluid flowing into arcuate passage 315 from the valve ports 224 of valve block 220 may not flow directly into actuation chamber 215, and instead is directed into the central passage 284 of rotary pilot valve 280 via the inlet ports 266 of valve body 260, which are in fluid communication with arcuate passage 315, and the inlet ports 286 of rotary pilot valve 280.

[0072] As shown particularly in Figures 8-10, motor housing 330 has a first or upper end 330A disposed directly adjacent the lower end 310B of connector body 310, a second or lower end 330B opposite upper end 330A, and a central passage 332

extending between ends 330A and 330B. A lower end of mandrel 210 extends into central passage 332 of motor housing 330 with lower annular seal 214B of mandrel 210 in sealing engagement with an inner surface of motor housing 330. Additionally, an outer surface of motor housing 330 receives an annular seal 334 positioned at lower end 330B. In this embodiment, motor housing 330 includes an offset passage 336 that extends axially between ends 330A and 330B. Offset passage 336 is radially offset from the central axis 105 of torque control assembly 100 and receives actuator 350. Actuator 350 comprises an output shaft 352 that extends from the upper end 330A of motor housing 330. As will be described further herein, actuator 350 is configured to provide a torque to output shaft 352 in response to receiving an electrical input or power from electronics sub 400. In this embodiment, actuator 350 comprises a brushless DC electric motor; however, in other embodiments, actuator 350 may comprise other actuators known in the art configured for providing an output torque. In this embodiment, a coupler 276 is coupled between the lower end 280B of rotary pilot valve 280 and output shaft 352, thereby rotatably coupling the output shaft 352 of actuator 350 with rotary pilot valve 280.

[0073] As shown particularly in Figures 8-10, in this embodiment, actuator assembly 200 also includes a plurality of circumferentially spaced pressure sensor assemblies 300 coupled to connector body 310 and motor housing 330, each of which are configured to measure the pressure of fluid flowing along circulation flowpath 178 as the fluid enters actuator assembly 200 via the ports 206 and 207 of hub 202. Particularly, actuator assembly 200 includes a sensor conduit 302 that extends between the sensor port 207 of hub 202 and the sensor port 226 of valve block 220, where each of pressure sensor assemblies 300 are in fluid communication with sensor port 226. Pressure sensor assemblies 300 are in signal communication with components of electronics sub 400, allowing for the recording and/or transmission of measurements made by pressure sensor assemblies of the pressure of fluid flowing into actuator assembly 200 via ports 206 and 207 of hub 202. In this embodiment, actuator assembly 200 further includes a pressure relief valve 306 coupled to hub 202. Particularly, pressure relief valve 306 (shown in Figure 9) is in fluid communication with the pressure relief port 208 of hub 202 which is in fluid communication with fluid disposed in sealed chamber 114 and flowing along the circulation flowpath 178 into actuator assembly 200. Pressure relief valve 306 includes a relief port 307 positioned in the second slot 230 of valve block 220 and in fluid communication with actuation

chamber 215. Pressure relief valve 306 is configured to relieve fluid pressure in sealed chamber 114 directly to actuation chamber 215 in response to fluid pressure downstream of rotor 170 reaching a predetermined threshold or maximum pressure, beyond which the performance of torque control assembly 100 may be jeopardized. Thus, opening of the pressure relief valve 306, fluid exiting positive displacement pump 140 may enter actuation chamber 215 via the relief port 307 of pressure relief valve 306, thereby allowing fluid to enter actuation chamber 215 while bypassing spool valves 240.

[0074] As shown particularly in Figures 8, 16, and 17, in this embodiment, the electronics sub 400 of torque control assembly 100 generally includes a housing 402, a controller or electronics package 420, a extension mandrel 430, an outer sleeve 460, and a lower sub 470. Housing 402 of electronics sub 400 has a first or upper end 402A, a second or lower end 402B, a central passage 404 extending between ends 402A and 402B, and a generally cylindrical outer surface 406 extending between ends 402A and 402B. The upper end 402A of housing 402 is coupled to the lower end 150B of stator 150 at a sealed, thread connection 112. In this embodiment, housing 402 includes an electronics receptacle 408 formed in outer surface 406 which receives the electronics package 420. In this embodiment, electronics package 420 includes a processor and a memory in signal communication with the processor.

[0075] A cable passage 410 extends from electronics receptacle 408 to the upper end 402A of housing 402. An electrical connector 422 for electrically connecting electronics package 420 with actuator 350 is received in passage 410 at the upper end 402A of housing 402. In this embodiment, the outer surface 406 of housing 402 receives a pair of annular seals 412, where electronics receptacle 408 is disposed axially between the pair of annular seals 412. Sleeve 460 of electronic sub 400 is positioned about housing 402, with an inner surface of sleeve 460 in sealing engagement with annular seals 412 of housing 402 to restrict fluid communication between electronics receptacle 408 of housing 402 and the surrounding environment.

[0076] As shown particularly in Figure 17 (sleeve 460 being hidden in Figure 17 for clarity), housing 402 also includes a plurality of circumferentially spaced sensor receptacles 414, each sensor receptacle 414 receiving a sensor package 424 in signal communication with electronics package 420. Sensor packages 424 are configured to provide input signals to electronics package 420 corresponding to measurements of conditions in the environment surrounding torque control assembly and/or parameters

of the torque control assembly 100 (e.g., inclination, rotational speed of housing 402, etc.). In some embodiments, each sensor package 424 comprises one or more of a magnetometer, an accelerometer, and/or a gyro tool or sensor.

[0077] Extension mandrel 430 of electronics sub 400 has a first or upper end 430A, a second or lower end 430B opposite upper end 430A, and a central passage 432 extending between upper end 430A and lower end 430B. The upper end of extension mandrel 430 is coupled to the lower end 180B of lower flex shaft 180 at a sealed, threaded connection 133. The central passage 432 of extension mandrel 430 is in fluid communication with the central passage 182 of lower flex shaft 180. Electronic sub 400 additionally includes an annular support assembly 440 disposed radially between extension mandrel 430 and housing 402. Support assembly 440 is generally configured to support extension mandrel 430 while sealing central passage 432 of extension mandrel 430 from the sealed chamber 114. In this embodiment, support assembly 440 includes a plurality of outer annular seals 442 that sealingly engage an inner surface of housing 402 and a plurality of inner annular seals 444 that sealingly engage an outer surface of extension mandrel 430. In this arrangement, drilling fluid flowing through lower flex shaft 180 and extension mandrel 430 may not enter sealed chamber 114 and the actuator assembly 200. Additionally, a radial bearing 446 is positioned radially between the outer surface of extension mandrel 430 and an inner surface of support assembly 440 to permit relative rotation between extension mandrel 430 and support assembly 440. Lower sub 470 of electronics sub 400 has a first or upper end 470A coupled to the lower end 402B of housing 402 at a sealed, threaded connection 112, a second or lower end 470B opposite upper end 470A that is coupled to power section 60 of drilling assembly 50, and a central passage 472 extending between ends 470A, 470B that is in fluid communication with the central passage 404 of housing 402.

[0078] Electronics package 420 of electronics sub 400 is configured to control the actuation of actuator 350 and thereby the amount of torque transmitted between rotor 170 and stator assembly 142 of the positive displacement pump 140. Particularly, in response to receiving a control signal transmitted from electronics package 420, actuator 350 is configured to rotate the rotary pilot valve 280 relative to valve body 260 and thereby adjust the restriction to fluid flow between inlet ports 266 and outlet port 268 of valve body 260. By increasing the restriction to fluid flow between inlet ports 266 and outlet port 268 of valve body 260, a pressure differential between inlet ports

266 and outlet port 268 of valve body 260 is increased. The increased pressure differential results in an increase in fluid pressure acting against the lower end 250B of the piston 250 of each spool valve 240, thereby forcing piston 250 towards the first end 242A of the corresponding cylinder 242 and increasing the restriction to fluid flow between central passage 244 and ports 248 of each spool valve 240. Thus, by adjusting the rotational position of rotary spool valve 240 via actuator 350, electronics package 420 is configured to adjust the restriction to fluid flowing along circulation flowpath 178, and thereby the amount of torque transmitted between rotor 170 and stator assembly 142 of the positive displacement pump 140. Although in this embodiment rotary pilot valve 280 is utilized for creating an adjustable fluid flow restriction, in other embodiments, an adjustable fluid flow restriction may be created through the use of a force motor pilot valve, a direct acting (i.e., does not include or work in conjunction with a spool valve) rotary valve, and/or a direct acting force motor valve.

[0079] In some embodiments, electronics package 420 may control the actuation of actuator 350 in response to receiving control signals from the surface via telemetry system 30. In other embodiments, the memory of electronics package 420 may store an algorithm for controlling the actuation of actuator 350, and in-turn the amount of torque transmitted between rotor 170 and stator assembly 142 of the positive displacement pump 140. In some embodiments, the algorithm stored on the memory of electronics package 420 may be configured to provide damping against stick-slip oscillations of drill string 21 and/or holding a constant angular orientation of drilling assembly 50 in borehole 16. As will be described further herein, torque control assembly 100 may operate in one of several modes as controlled by electronics package 420.

[0080] In some embodiments, drilling assembly 50 and torque control assembly 100 may operate: in a first or “set tool face” mode that is configured to adjust the angular orientation of drilling assembly 50 by rotating drill string 21 at a first rotational rate; in a second or “hold tool face” mode configured to hold the angular orientation of drilling assembly 50 set during the first mode by rotating drill string 21 at a second rotational rate that is greater than the first rotational rate; and in a third or “drilling ahead” or “straight through” mode configured to restrict relative rotation between the rotor 170 and the stator assembly 142 of torque control assembly 100 by rotating drill string 21 at a third rotational rate that is greater than the first rotational rate and the second

rotational rate. In some embodiments, when drilling assembly 50 and torque control assembly 100 are operated in the third mode fluid flow along circulation flowpath 178 is ceased or reduced to substantially zero whereby rotor 170 is rotationally locked to stator assembly 142. In this embodiment, drilling assembly 50 and torque control assembly 100 may operate in the first by rotating drill string 21 at a downhole speed (i.e., the rotational rate of the end of drill string 21 connected to drilling assembly 50) of between approximately 0-10 revolutions per minute (RPM), in the second mode by rotating drill string 21 at a downhole speed of drill string 21 between approximately 10-30 RPM, and the third mode by rotating drill string 21 at a downhole speed that is greater than approximately 30 RPM.

[0081] Referring to Figures 1, 3, and 18-32, an embodiment of the driveshaft assembly 500 and bearing assembly 600 of the drilling assembly 50 of Figure 1 are shown in Figures 18-32. In the embodiment of Figures 18-32, driveshaft assembly 500 is coupled to bearing assembly 600 via a bend adjustment assembly 700 of drilling assembly 50 that selectably provides an adjustable bend 701 (shown in Figure 1) along drilling assembly 50. Due to bend 701, a deflection angle θ is formed between a central or longitudinal axis 95 (shown in Figure 1) of drill bit 90 and the longitudinal axis 25 of drill string 21. To drill a straight section of borehole 16, drill string 21 is rotated from rig 20 with a rotary table or top drive to rotate drilling assembly 50 and drill bit 90 coupled thereto. Drill string 21 and drilling assembly 50 rotate about the longitudinal axis of drill string 21, and thus, drill bit 90 is also forced to rotate about the longitudinal axis of drill string 21. With bit 90 disposed at deflection angle θ, the lower end of drill bit 90 distal drilling assembly 50 seeks to move in an arc about longitudinal axis 25 of drill string 21 as it rotates, but is restricted by the sidewall 19 of borehole 16, thereby imposing bending moments and associated stress on drilling assembly 50 and mud motor 55. In general, the magnitudes of such bending moments and associated stresses are directly related to the bit-to-bend distance D – the greater the bit-to-bend distance D, the greater the bending moments and stresses experienced by drilling assembly 50 and mud motor 55.

[0082] In general, driveshaft assembly 500 functions to transfer torque from the eccentrically-rotating rotor 70 of power section 60 to a concentrically-rotating bearing mandrel 620 of bearing assembly 600 and drill bit 90. As best shown in Figure 3, rotor 70 rotates about rotor axis 78 in the direction of arrow 74, and rotor axis 78 rotates

about stator axis 88 in the direction of arrow 75. However, drill bit 90 and bearing mandrel 620 are coaxially aligned and rotate about a common axis that is offset and/or oriented at an acute angle relative to rotor axis 78. Thus, driveshaft assembly 500 converts the eccentric rotation of rotor 70 to the concentric rotation of bearing mandrel 620 and drill bit 90, which are radially offset and/or angularly skewed relative to rotor axis 78.

[0083] In this embodiment, driveshaft assembly 500 includes an outer or driveshaft housing 510 and a one-piece (i.e., unitary) driveshaft 520 rotatably disposed within housing 510. Housing 510 has a linear central or longitudinal axis 515, a first or upper end 510A, a second or lower end 510B coupled to an outer or bearing housing 610 of bearing assembly 600 via bend adjustment assembly 700, and a central bore or passage 512 extending between ends 510A and 510B. Particularly, an externally threaded connector or pin end of driveshaft housing 510 located at upper end 510A threadably engages a mating internally threaded connector or box end disposed at the lower end of stator housing 65, and an internally threaded connector or box end of driveshaft housing 510 located at lower end 510B threadably engages a mating externally threaded connector of bend adjustment assembly 700. Additionally, driveshaft housing includes ports 514 (shown in Figure 21) that extend radially between the inner and outer surfaces of driveshaft housing 510.

[0084] As best shown in Figure 1, in this embodiment, driveshaft housing 510 is coaxially aligned with stator housing 65. As will be discussed further herein, bend adjustment assembly 700 is configured to actuate between an unbent position 703 (shown in Figure 18), a first bent position 705 (shown schematically in Figure 1) providing a first deflection angle θ_1 between the longitudinal axis 95 of drill bit 90 and the longitudinal axis 25 of drill string 21, and a second bent position providing a second deflection angle θ_2 between the longitudinal axis 95 of drill bit 90 and the longitudinal axis 25 of drill string 21 that is greater than the first deflection angle θ_1. The unbent position 703 may also be referred to a first position of bend adjustment assembly 700, first bent position 705 as the second position of bend adjustment assembly 700, and the second bent position as the third position of bend adjustment assembly 700.

[0085] In this embodiment, when bend adjustment assembly 700 is in the unbent position 703, driveshaft housing 510 is not disposed at an angle relative to bearing assembly 600 and drill bit 90. However, when bend adjustment assembly is

disposed in the first bent position 705, bend 701 is formed between driveshaft assembly 500 and bearing assembly 600, orienting driveshaft housing 510 at non-zero deflection angle θ_1 relative to bearing assembly 600 and drill bit 90. Additionally, as will be discussed further herein, bend adjustment assembly 700 is configured to actuate between the unbent position 704, first bent position 705, and the second bent position in-situ with drilling assembly 50 disposed in borehole 16. While in this embodiment driveshaft housing 510 is not disposed at an angle relative to bearing assembly 600 and drill bit 90 when bend adjustment assembly 700 is in the unbent position 703, in other embodiments, bend adjustment assembly 700 may include a bent housing and comprise a "fixed bend" such that driveshaft housing 510 is disposed at an angle relative to bearing assembly 600 and drill bit 90 when bend adjustment assembly 700 is in the first position 703.

[0086] Driveshaft 520 of driveshaft assembly 500 has a linear central or longitudinal axis, a first or upper end 520A, and a second or lower end 520B opposite end 520A. Upper end 520A is pivotally coupled to the lower end of rotor 70 with a driveshaft adapter 530 and a first or upper universal joint 540A, and lower end 520B is pivotally coupled to an upper end 620A of bearing mandrel 620 with a second or lower universal joint 540B. In this embodiment, upper end 520A of driveshaft 520 and upper universal joint 540A are disposed within driveshaft adapter 530, whereas lower end 520B of driveshaft 520 comprises an axially extending counterbore or receptacle that receives upper end 620A of bearing mandrel 620 and lower universal joint 540B. In this embodiment, driveshaft 520 includes a radially outwards extending shoulder 522 located proximal lower end 520B.

[0087] In this embodiment, driveshaft adapter 530 extends along a central or longitudinal axis 535 between a first or upper end coupled to rotor 70, and a second or lower end coupled to the upper end 520A of driveshaft 520. In this embodiment, the upper end of driveshaft adapter 530 comprises an externally threaded male pin or pin end that threadably engages a mating female box or box end at the lower end of rotor 70. A receptacle or counterbore extends axially (relative to axis 535) from the lower end of adapter 530. The upper end 520A of driveshaft 520 is disposed within the counterbore of driveshaft adapter 530 and pivotally couples to adapter 530 via the upper universal joint 540A disposed within the counterbore of driveshaft adapter 530.

[0088] Universal joints 540A and 540B allow ends 520A and 520B of driveshaft 520 to pivot relative to adapter 530 and bearing mandrel 620, respectively, while transmitting rotational torque between rotor 70 and bearing mandrel 620. Driveshaft adapter 530 is coaxially aligned with rotor 70. Since rotor axis 78 is radially offset and/or oriented at an acute angle relative to the central axis of bearing mandrel 620, the central axis of driveshaft 520 is skewed or oriented at an acute angle relative to axis 515 of housing 510, axis 78 of rotor 70, and a central or longitudinal axis 625 of bearing mandrel 620. However, universal joints 540A and 540B accommodate for the angularly skewed driveshaft 520, while simultaneously permitting rotation of the driveshaft 520 within driveshaft housing 510.

[0089] In general, each universal joint (e.g., each universal joint 540A and 540B) may comprise any joint or coupling that allows two parts that are coupled together and not coaxially aligned with each other (e.g., driveshaft 520 and adapter 530 oriented at an acute angle relative to each other) limited freedom of movement in any direction while transmitting rotary motion and torque including, without limitation, universal joints (Cardan joints, Hardy-Spicer joints, Hooke joints, etc.), constant velocity joints, or any other custom designed joint. In other embodiments, driveshaft assembly 500 may include a flexible shaft comprising a flexible material (e.g., Titanium, etc.) that is directly coupled (e.g., threadably coupled) to rotor 70 of power section 60 in lieu of driveshaft 520, where physical deflection of the flexible shaft (the flexible shaft may have a greater length relative driveshaft 520) accommodates axial misalignment between driveshaft assembly 500 and bearing assembly 600 while allowing for the transfer of torque therebetween.

[0090] As previously described, adapter 530 couples driveshaft 520 to the lower end of rotor 70. During drilling operations, high pressure drilling fluid or mud is pumped under pressure down drill string 21 and through cavities 89 between rotor 70 and stator 80, causing rotor 70 to rotate relative to stator 80. Rotation of rotor 70 drives the rotation of driveshaft adapter 530, driveshaft 520, bearing assembly mandrel 620, and drill bit 90. The drilling fluid flowing down drill string 21 through power section 60 also flows through driveshaft assembly 500 and bearing assembly 600 to drill bit 90, where the drilling fluid flows through nozzles in the face of bit 90 into annulus 18. Within driveshaft assembly 500 and the upper portion of bearing assembly 600, the drilling fluid flows through an annulus 516 formed between driveshaft housing 510 and driveshaft 520.

[0091] As shown particularly in Figures 18-20, bearing assembly 600 includes bearing housing 610 and one-piece (i.e., unitary) bearing mandrel 620 rotatably disposed within housing 610. Bearing housing 610 has a linear central or longitudinal axis disposed coaxial with central axis 625 of mandrel 620, a first or upper end 610A coupled to lower end 510B of driveshaft housing 510 via bend adjustment assembly 700, a second or lower end 610B, and a central through bore or passage extending axially between ends 610A and 610B. Particularly, the upper end 610A comprises an externally threaded connector or pin end coupled with bend adjustment assembly 700. Bearing housing 610 is coaxially aligned with bit 90, however, due to bend 701 between driveshaft assembly 500 and bearing assembly 600, bearing housing 610 is oriented at deflection angle θ relative to driveshaft housing 510. Bearing housing 610 includes a plurality of circumferentially spaced stabilizers 611 extending radially outwards therefrom, where stabilizers 611 are generally configured to stabilize or centralize the position of bearing housing 610 in borehole 16

[0092] In this embodiment, bearing mandrel 620 of bearing assembly 600 has a first or upper end 620A, a second or lower end 620B, and a central through passage 621 extending axially from lower end 620B and terminating axially below upper end 620A. The upper end 620A of bearing mandrel 620 is directly coupled to the lower end 520B of driveshaft 520 via lower universal joint 540B. In particular, upper end 620A is disposed within a receptacle formed in the lower end 520B of driveshaft 520 and pivotally coupled thereto with lower universal joint 540B. Additionally, the lower end 620B of mandrel 620 is coupled to drill bit 90.

[0093] In this embodiment, bearing mandrel 620 includes a plurality of drilling fluid ports 622 extending radially from passage 621 to the outer surface of mandrel 620, and a plurality of lubrication ports 623 also extending radially to the outer surface of mandrel 620, where drilling fluid ports 622 are disposed proximal an upper end of passage 621 and lubrication ports 623 are axially spaced from drilling fluid ports 622. In this arrangement, lubrication ports 623 are separated or sealed from passage 621 of bearing mandrel 620 and the drilling fluid flowing through passage 621. Drilling fluid ports 622 provide fluid communication between annulus 516 and passage 621. During drilling operations, mandrel 620 is rotated about axis 625 relative to housing 610. In particular, high pressure drilling fluid is pumped through power section 60 to drive the rotation of rotor 70, which in turn drives the rotation of driveshaft 520, mandrel 620, and drill bit 90. The drilling mud flowing through power section 60 flows

through annulus 516, drilling fluid ports 622 and passage 621 of mandrel 620 in route to drill bit 90.

[0094] In this embodiment, the upper end 520A of driveshaft 520 is coupled to rotor 70 with a driveshaft adapter 530 and upper universal joint 540A, and the lower end 520B of driveshaft 520 is coupled to the upper end 620A of bearing mandrel 620 with lower universal joint 540B. Bearing housing 610 has a central bore or passage defined by a radially inner surface 612 that extends between ends 610A and 610B. A pair of first or upper annular seals 614 are disposed in the inner surface 612 of housing 610 proximal upper end 610A while a second or lower annular seal 616 is disposed in the inner surface 612 proximal lower end 610B. In this arrangement, an annular chamber 617 is formed radially between inner surface 612 and an outer surface of bearing mandrel 620, where annular chamber 617 extends axially between upper seals 614 and lower seal 616. Although in this embodiment bearing housing 610 includes upper seals 614, in other embodiments, seals 614 may instead be disposed on a generally cylindrical inner surface 742 of actuator housing 740.

[0095] Bearing mandrel 620 of bearing assembly 600 additionally includes a central sleeve 624 disposed in passage 621 and coupled to an inner surface of mandrel 620 defining passage 621. An annular piston 626 is slidably disposed in passage 621 radially between the inner surface of mandrel 620 and an outer surface of sleeve 624, where piston 626 includes a first or outer annular seal 628A that seals against the inner surface of mandrel 620 and a second or inner annular seal 628B that seals against the outer surface of sleeve 624. In this arrangement, chamber 617 extends into the annular space (via lubrication ports 623) formed between the inner surface of mandrel 620 and the outer surface of sleeve 624 that is sealed from the flow of drilling fluid through passage 621 via the annular seals 628A and 628B of piston 626.

[0096] In this embodiment, a first or upper radial bearing 630, a thrust bearing assembly 632, and a second or lower radial bearing 634 are each disposed in chamber 617. Upper radial bearing 630 is disposed about mandrel 620 and axially positioned above thrust bearing assembly 632, and lower radial bearing 634 is disposed about mandrel 620 and axially positioned below thrust bearing assembly 632. In general, radial bearings 630, 634 permit rotation of mandrel 620 relative to housing 610 while simultaneously supporting radial forces therebetween. In this embodiment, upper radial bearing 630 and lower radial bearing 634 are both sleeve type bearings that slidingly engage the outer surface of mandrel 620. However, in

general, any suitable type of radial bearing(s) may be employed including, without limitation, needle-type roller bearings, radial ball bearings, or combinations thereof.

[0097] Annular thrust bearing assembly 632 is disposed about mandrel 620 and permits rotation of mandrel 620 relative to housing 610 while simultaneously supporting axial loads in both directions (e.g., off-bottom and on-bottom axial loads). In this embodiment, thrust bearing assembly 632 generally comprises a pair of caged roller bearings and corresponding races, with the central race threadedly engaged to bearing mandrel 620. In other embodiments, one or more other types of thrust bearings may be included in bearing assembly 600, including ball bearings, planar bearings, etc. In still other embodiments, the thrust bearing assemblies of bearing assembly 600 may be disposed in the same or different thrust bearing chambers (e.g., two-shoulder or four-shoulder thrust bearing chambers). In this embodiment, radial bearings 630, 634 and thrust bearing assembly 632 are oil-sealed bearings. Particularly, chamber 617 comprises an oil or lubricant filled chamber that is pressure compensated via piston 626. In other words, piston 626 equalizes the fluid pressure within chamber 617 with the pressure of drilling fluid flowing through passage 621 of mandrel 620 towards drill bit 90. As previously described, in this embodiment, bearings 630, 632, 634 are oil-sealed. However, in other embodiments, the bearings of the bearing assembly (e.g., bearing assembly 600) are mud lubricated.

[0098] Referring still to Figures 1, 3, and 18-32, as previously described, bend adjustment assembly 700 couples driveshaft housing 510 to bearing housing 610, and introduces bend 701 and deflection angle θ along drilling assembly 50. Central axis 515 of driveshaft housing 510 is coaxially aligned with axis 25, and central axis 625 of bearing mandrel 620 is coaxially aligned with axis 95, thus, deflection angle θ also represents the angle between axes 515, 625 when mud motor 55 is in an undeflected state (e.g., outside borehole 16). Additionally, bend adjustment assembly 700 is configured to adjust the amount of bend 701 without needing to pull drill string 21 from borehole 16 to adjust bend adjustment assembly 700 at the surface, thereby reducing the amount of time required to drill borehole 16.

[0099] In this embodiment, bend adjustment assembly 700 generally includes a first or upper offset housing 702, an upper housing extension 710, a second or lower offset housing 720, a clocker or actuator housing 740, a piston mandrel 750, a first or upper adjustment mandrel 760, a second or lower adjustment mandrel 370, and a

locking piston 790. Additionally, in this embodiment, bend adjustment assembly 700 includes a locker or actuator assembly 800 housed in the actuator housing 740, where locker assembly 800 is generally configured to control the actuation of bend adjustment assembly between the unbent position 703, first bent position 705, and the second bent position with drilling assembly 50 disposed in borehole 16.

[00100] As shown particularly in Figures 18, 19, and 21, upper offset housing 702 of bend adjustment assembly 700 is generally tubular and has a first or upper end 702A, a second or lower end 702B, and a central bore or passage defined by a generally cylindrical inner surface 704 extending between ends 702A and 702B. The inner surface 704 of upper offset housing 702 includes a first or upper threaded connector 706 extending from upper end 702A, and a second or lower threaded connector 708 extending from lower end 702B and coupled to lower offset housing 720. Upper housing extension 710 is generally tubular and has a first or upper end 710A, a second or lower end 710B, a central bore or passage defined by a generally cylindrical inner surface 712 extending between ends 710A and 710B, and a generally cylindrical outer surface 714 extending between ends 710A and 710B. In this embodiment, the inner surface 712 of upper housing extension 710 includes an engagement surface 716 extending from upper end 710A that matingly engages an offset engagement surface 765 of upper adjustment mandrel 760. Additionally, in this embodiment, the outer surface 714 of upper housing extension 710 includes a threaded connector coupled with the upper threaded connector 706 of upper offset housing 702 and an annular shoulder 718 facing lower adjustment mandrel 770.

[00101] As shown particularly in Figures 21 and 23, the lower offset housing 720 of bend adjustment assembly 700 is generally tubular and has a first or upper end 720A, a second or lower end 720B, and a generally cylindrical inner surface 722 extending between ends 720A and 720B. A generally cylindrical outer surface of lower offset housing 720 includes a threaded connector coupled to the threaded connector 316 of upper offset housing 310. The inner surface 722 of lower offset housing 720 includes an offset engagement surface 723 extending from upper end 720A to an internal shoulder 727S, and a threaded connector 724 extending from lower end 720B. In this embodiment, offset engagement surface 723 defines an offset bore or passage 727 that extends between upper end 720A and internal shoulder 727S of lower offset housing 720.

[00102] Additionally, lower offset housing 720 includes a central bore or passage 729 extending between lower end 720B and internal shoulder 727S, where central passage 729 has a central axis disposed at an angle relative to a central axis of offset bore 727. In other words, offset engagement surface 723 has a central or longitudinal axis that is offset or disposed at an angle relative to a central or longitudinal axis of lower offset housing 720. Thus, in this embodiment, the offset or angle formed between central bore 729 and offset bore 727 of lower offset housing 720 facilitates the formation of bend 701 described above. In this embodiment, the inner surface 722 of lower offset housing 720 additionally includes a first or upper annular shoulder 725, a second or lower annular shoulder 726, and an annular seal 720S located between shoulders 725 and 726. Additionally, inner surface 722 of lower offset housing 720 includes a pair of circumferentially spaced slots 731, where slots 731 extend axially into lower offset housing 720 from upper shoulder 725.

[00103] In this embodiment, lower offset housing 720 of bend adjustment assembly 700 includes an arcuate, axially extending locking member or shoulder 728 at upper end 720A. Particularly, locking shoulder 728 extends arcuately between a pair of axially extending shoulders 728S. In this embodiment, locking shoulder 728 extends less than 180° about the central axis of lower offset housing 720; however, in other embodiments, the arcuate length or extension of locking shoulder 728 may vary. Additionally, lower offset housing 720 includes a plurality of circumferentially spaced and axially extending ports 730. Particularly, ports 730 extend axially between lower shoulder 726 and an arcuate shoulder 732 from which locking shoulder 728 extends. As will be discussed further herein, ports 730 of lower offset housing 720 provide fluid communication through a generally annular compensation or locking chamber 795 (shown in Figure 9) of bend adjustment assembly 700.

[00104] As shown particularly in Figures 19 and 22, actuator housing 740 of bend adjustment assembly 700 houses the locker assembly 800 of bend adjustment assembly 700 and threadably couples bend adjustment assembly 700 with bearing assembly 600. Actuator housing 740 is generally tubular and has a first or upper end 740A, a second or lower end 740B, and a central bore or passage defined by the generally cylindrical inner surface 742 extending between ends 740A and 740B. A generally cylindrical outer surface of actuator housing 740 includes a threaded connector at upper end 740A that is coupled with the threaded connector 724 of lower offset housing 720. In this embodiment, the inner surface 742 of actuator

housing 740 includes a threaded connector 744 at lower end 740B, an annular shoulder 746, and a port 747 that extends radially between inner surface 742 and the outer surface of actuator housing 740. Threaded connector 744 couples with a corresponding threaded connector disposed on an outer surface of bearing housing 610 at the upper end 610A of bearing housing 610 to thereby couple bend adjustment assembly 700 with bearing assembly 600. In this embodiment, the inner surface 742 of actuator housing 740 additionally includes an annular seal 748 located proximal shoulder 746 and a plurality of circumferentially spaced and axially extending slots or grooves 749. As will be discussed further herein, seal 748 and slots 749 are configured to interface with components of locker assembly 800.

[00105] As shown particularly in Figure 21, piston mandrel 750 of bend adjustment assembly 700 is generally tubular and has a first or upper end 750A, a second or lower end 750B, and a central bore or passage extending between ends 750A and 750B. Additionally, in this embodiment, piston mandrel 750 includes a generally cylindrical outer surface comprising a threaded connector 751 and an annular seal 752. In other embodiments, piston mandrel 750 may not include connector 751. Threaded connector 751 extends from lower end 750B while annular seal 752 is located at upper end 750A that sealingly engages the inner surface of driveshaft housing 510. Further, piston mandrel 750 includes an annular shoulder 753 located proximal upper end 750A that physically engages or contacts an annular biasing member 754 extending about the outer surface of piston mandrel 750. In this embodiment, an annular compensating piston 756 is slidably disposed about the outer surface of piston mandrel 750. Compensating piston 756 includes a first or outer annular seal 758A disposed in an outer cylindrical surface of piston 756, and a second or inner annular seal 758B disposed in an inner cylindrical surface of piston 756, where inner seal 758B sealingly engages the outer surface of piston mandrel 750.

[00106] As shown particularly in Figure 21, upper adjustment mandrel 760 of bend adjustment assembly 700 is generally tubular and has a first or upper end 760A, a second or lower end 760B, and a central bore or passage defined by a generally cylindrical inner surface extending between ends 760A and 760B. In this embodiment, the inner surface of upper adjustment mandrel 760 includes an annular recess 761 extending axially into mandrel 760 from upper end 760A, and an annular seal 762 axially spaced from recess 761 and configured to sealingly engage the

outer surface of piston mandrel 750. The inner surface of upper adjustment mandrel 760 additionally includes a threaded connector 763 coupled with a threaded connector on the outer surface of piston mandrel 750 at the lower end 750B thereof. In other embodiments, upper adjustment mandrel 760 may not include connector 763. In this embodiment, outer seal 758A of compensating piston 756 sealingly engages the inner surface of upper adjustment mandrel 760, restricting fluid communication between locking chamber 795 and a generally annular compensating chamber 759 formed about piston mandrel 750 and extending axially between seal 752 of piston mandrel 750 and outer seal 758A of compensating piston 756. In this configuration, compensating chamber 759 is in fluid communication with the surrounding environment (e.g., borehole 16) via ports 514 in driveshaft housing 510.

[00107] In this embodiment, upper adjustment mandrel 760 includes a generally cylindrical outer surface comprising a first or upper threaded connector 764, and an offset engagement surface 765. Upper threaded connector extends from upper end 760A and couples to a threaded connector disposed on the inner surface of driveshaft housing 510 at lower end 510B. Offset engagement surface 765 has a central or longitudinal axis that is offset from or disposed at an angle relative to a central or longitudinal axis of upper adjustment mandrel 760. Offset engagement surface 765 matingly engages the engagement surface 716 of upper offset housing 702. In this embodiment, relative rotation is permitted between upper offset housing 702 and upper adjustment mandrel 760 while relative axial movement is restricted between housing 702 and mandrel 760.

[00108] As shown particularly in Figures 21, 26, and 27, lower adjustment mandrel 770 of bend adjustment assembly 700 is generally tubular and has a first or upper end 770A, a second or lower end 770B, a central bore or passage extending therebetween that is defined by a generally cylindrical inner surface extending between ends 770A, 770B, and a generally cylindrical outer surface 772 extending between ends 770A, 770B. In this embodiment, outer surface 772 of lower adjustment mandrel 770 includes an offset engagement surface 774, an annular seal 776 in sealing engagement with the inner surface of lower offset housing 720, a first or lower arcuately extending recess 778, and a second or upper arcuately extending recess 780 axially spaced from lower arcuate recess 778. Offset engagement surface 774 has a central or longitudinal axis that is offset or disposed at an angle relative to a central or longitudinal axis of the upper end 770A of upper adjustment

mandrel 770 and the lower end 720B of lower offset housing 720, where offset engagement surface 774 is disposed directly adjacent or overlaps the offset engagement surface 723 of lower offset housing 720. In this embodiment, a plurality of circumferentially spaced cylindrical splines or keys 775 are positioned radially between lower adjustment mandrel 770 and upper adjustment mandrel 760 to restrict relative rotation between lower adjustment mandrel 770 and upper adjustment mandrel 760 while allowing for relative axial movement therebetween. Additionally, upper adjustment mandrel 760 includes an annular seal 769 that sealingly engages the inner surface of lower adjustment mandrel 770.

[00109] Lower arcuate recess 778 of lower adjustment mandrel 770 is defined by an inner terminal end 778E, a first shoulder 779A, and a second shoulder 779B circumferentially spaced from first shoulder 779A. Similarly, upper arcuate recess 780 of lower adjustment mandrel 770 is defined by an inner terminal end 780E, a first shoulder 781A, and a second shoulder 781B circumferentially spaced from first shoulder 781A. The inner end 778E of lower arcuate recess 778 is positioned nearer to the lower end 770B of mandrel 770 than the inner end 780E of upper arcuate recess 780. Additionally, while first shoulder 779A of lower arcuate recess 778 is generally circumferentially aligned with first shoulder 781A of upper arcuate recess 780, second shoulder 779B of lower arcuate recess 778 is circumferentially spaced from second shoulder 781B of upper arcuate recess 780. In this arrangement, the circumferential length extending between shoulders 779A, 779B of lower arcuate recess 778, is greater than the circumferential length extending between shoulders 781A, 781B of upper arcuate recess 780. Particularly, in this embodiment, lower arcuate recess 778 extends approximately 160° about the circumference of lower adjustment mandrel 770 while upper arcuate recess 780 extends approximately 60° about the circumference of lower adjustment mandrel 770; however, in other embodiments, the circumferential length of both lower arcuate recess 778 and upper arcuate recess 780 about lower adjustment mandrel 770 may vary.

[00110] Lower adjustment mandrel 770 also includes a pair of circumferentially spaced first or short slots 782, a pair of circumferentially spaced second or long slots 784A, and a second pair of circumferentially spaced long slots 784B, where both short slots 782 and long slots 784A, 784B extend axially into lower adjustment mandrel 770 from lower end 770B. In this embodiment: each short slot 782 is

circumferentially spaced approximately 180° apart, each long slot 784A is circumferentially spaced approximately 180° apart, and each long slot 784B is circumferentially spaced approximately 180° apart.

In this embodiment, lower adjustment mandrel 770 of bend adjustment assembly 700 is permitted to move axially relative to lower offset housing 720. Particularly, lower adjustment mandrel 770 is permitted to travel between a first axial position in upper housing 702 (shown in Figures 21 and 32) and a second axial position in upper offset housing 702 (shown in Figures 33, 35, and 36) that is axially spaced from the first axial position. When lower adjustment mandrel 770 is disposed in the first axial position, the locking shoulder 728 of lower offset housing 720 is received in the upper arcuate recess 780 of lower adjustment mandrel 770 and the upper end 770A of mandrel 770 is axially spaced from shoulder 718 of upper housing extension 710. Conversely, when lower adjustment mandrel 770 is disposed in the second axial position, the locking shoulder 728 of lower offset housing 720 is received in the lower arcuate recess 778 of lower adjustment mandrel 770 and the upper end 770A of mandrel contacts or is disposed directly adjacent shoulder 718 of upper housing extension 710. As shown particularly in Figure 32, in this embodiment, lower adjustment mandrel 770 is initially held or retained in the first axial position when drilling assembly 50 is run into borehole 16 via a shear pin 788 extending radially between lower adjustment mandrel 770 and upper housing extension 710. Shear pin 788 is designed to shear or break upon the application of a predetermined axially directed force against lower adjustment mandrel 770 to allow lower adjustment mandrel 770 to travel from the first axial position to the second axial position.

[00111] As shown particularly in Figures 21 and 25, locking piston 790 of bend adjustment assembly 700 is generally tubular and has a first or upper end 790A, a second or lower end 790B, and a central bore or passage extending therebetween. Locking piston 790 includes a generally cylindrical outer surface comprising an annular seal 792 disposed therein. In this embodiment, locking piston 790 includes a pair of circumferentially spaced keys 794 that extend axially from upper end 790A, where each key 794 extends through one of the circumferentially spaced slots 731 of lower offset housing 720. In this arrangement, relative rotation between locking piston 790 and lower offset housing 720 is restricted while relative axial movement is permitted therebetween. Each pair of circumferentially spaced slots 782, 784A, and 784B of lower adjustment mandrel 770 is configured to matingly receive and engage

the keys 794 of locking piston 790 to restrict relative rotation between lower adjustment mandrel 770 and lower offset housing 720. In this embodiment, the outer surface of locking piston 790 includes an annular shoulder 796 located between ends 790A and 790B.

[00112] The combination of sealing engagement between seal 792 of locking piston 790 and the inner surface 722 of lower offset housing 720, and seal 720S of housing 720 and the outer surface of locking piston 790, defines a lower axial end of locking chamber 795. Locking chamber 795 extends longitudinally from the lower axial end thereof to an upper axial end defined by the combination of sealing engagement between the outer seal 758A of compensating piston 756 and the inner seal 758B of piston 756. Particularly, lower adjustment mandrel 770 and upper adjustment mandrel 760 each include axially extending ports similar in configuration to the ports 730 of lower offset housing 720 such that fluid communication is provided between the annular space directly adjacent shoulder 796 of locking piston 790 and the annular space directly adjacent a lower end of compensating piston 756. Locking chamber 795 is sealed from annulus 516 such that drilling fluid flowing into annulus 516 is not permitted to communicate with fluid disposed in locking chamber 795, where locking chamber 795 is filled with lubricant.

[00113] As shown particularly in Figures 22, 24, 28 and 29, locker assembly 800 of bend adjustment assembly 700 generally includes a locker piston 802 and a torque transmitter or teeth ring 820. locker piston 802 is slidably disposed about bearing mandrel 620 and has a first or upper end 802A, a second or lower end 802B, and a central bore or passage extending therebetween. In this embodiment, locker piston 802 has a generally cylindrical outer surface including an annular shoulder 804 and an annular seal 806 located axially between shoulder 804 and lower end 802B. The outer surface of locker piston 802 includes a plurality of radially outwards extending and circumferentially spaced keys 808 received in the slots 749 of actuator housing 740. In this arrangement, locker piston 802 is permitted to slide axially relative actuator housing 740 while relative rotation between actuator housing 740 and locker piston 802 is restricted. Additionally, in this embodiment, locker piston 802 includes a plurality of circumferentially spaced locking teeth 810 extending axially from lower end 802B.

[00114] In this embodiment, seal 806 of locker piston 802 sealingly engages the inner surface 742 of actuator housing 740 and the seal 748 of actuator housing 740

sealingly engages the outer surface of locker piston 802 to form an annular, sealed compensating chamber 812 extending therebetween. Fluid pressure within compensating chamber 812 is compensated or equalized with the surrounding environment (e.g., borehole 16) via port 747 of actuator housing 740. Additionally, an annular biasing member 812 is disposed within compensating chamber 810 and applies a biasing force against shoulder 804 of locker piston 802 in the axial direction of teeth ring 820. Teeth ring 820 of locker assembly 800 is generally tubular and comprises a first or upper end 820A, a second or lower end 820B, and a central bore or passage extending between ends 820A and 820B. Teeth ring 820 is coupled to bearing mandrel 620 via a plurality of circumferentially spaced splines or pins 822 disposed radially therebetween. In this arrangement, relative axial and rotational movement between bearing mandrel 620 and teeth ring 820 is restricted. In this embodiment, teeth ring 820 comprises a plurality of circumferentially spaced teeth 824 extending from upper end 820A. Teeth 824 of teeth ring 820 are configured to matingly engage or mesh with the teeth 810 of locker piston 802 when biasing member 812 biases locker piston 802 into contact with teeth ring 820, as will be discussed further herein.

[00115] Having described the structure of the embodiment of driveshaft assembly 500, bearing assembly 600, and bend adjustment assembly 700, an embodiment for operating assemblies 500, 600, and 700 will now be described. As described above, bend adjustment assembly 700 is adjustable between more than two positions while disposed in borehole 16. Particularly, in this embodiment, bend adjustment assembly 700 is adjustable between a first position that is unbent, a first bent position providing a first deflection angle θ_1 between the longitudinal axis 95 of drill bit 90 and the longitudinal axis 25 of drill string 21, and a second bend position providing a second deflection angle θ_2 between the longitudinal axis 95 of drill bit 90 and the longitudinal axis 25 of drill string 21 that is greater than the first deflection angle θ_1. In other embodiments, bend adjustment assembly 700 may incorporate a fixed bend, thereby allowing bend adjustment assembly 700 to provide three unbent deflection angles between its first, second, and third positions. Although in this embodiment bend adjustment assembly 700 is configured to actuate between three separate positions, in other embodiments, bend adjustment assembly may be configured to actuate between two positions or more than three positions.

[00116] In this embodiment, bend adjustment assembly 700 is initially deployed in borehole 16 in unbent position 703 where there is no deflection angle between the longitudinal axis 95 of drill bit 90 and the longitudinal axis 25 of drill string 21. In the unbent position 703 of bend adjustment assembly 700, lower adjustment mandrel 770 is retained in the lower position by shear pin 788. Additionally, in the unbent position 703, locking shoulder 728 of lower offset housing 720 is received in upper arcuate recess 780 of lower adjustment mandrel 770 with a first of the axially extending shoulders 728S of locking shoulder 728 contacting or disposed directly adjacent first shoulder 781A of upper arcuate recess 780 and the second of the axially extending shoulders 728S of locking shoulder 728 circumferentially spaced from second shoulder 781B of upper arcuate recess 780.

[00117] As borehole 16 is drilled by the drill bit 90 of drilling assembly 50 with bend adjustment assembly 700 disposed in the unbent position 703, drill string 21 is rotated by rotary system 24 and drilling mud is pumped through drill string 21 from surface pump 23 at a drilling flowrate. In some embodiments, the drilling flowrate comprises approximately 50%-80% of the maximum mud flowrate of drilling system 10. While drill string 21 is rotated by rotary system 24 and mud is pumped through drill string 21 at the drilling flowrate, locking piston 790 is disposed in the locked position with keys 794 of locking piston 790 are received in the first pair of long slots 784B, thereby restricting relative rotation between lower adjustment mandrel 770 and lower offset housing 720 (locking piston 790 being rotationally locked with lower offset housing 720).

[00118] When it is desired to actuate bend adjustment assembly 700 from the unbent position 703 to the first bent position 705 and thereby provide the first deflection angle θ_1 between drill bit 90 and drill string 21, rotation of drill string 21 from rotary system 24 is ceased and the pumping of drilling mud from surface pump 23 is ceased for a predetermined first time period. In some embodiments, the first time period over which pumping is ceased from surface pump 23 comprises approximately 15-60 seconds; however, in other embodiments, the first time period may vary. With the flow of drilling fluid to power section 60 ceased, biasing member 754 displaces locking piston 790 from the locked position with keys 794 received in the first pair of long slots 784A of lower adjustment mandrel 770, to the unlocked position with keys 794 free from long slots 784A, thereby unlocking lower offset housing 720 from lower adjustment mandrel 770.

[00119] Following the first time period, surface pump 23 resumes pumping drilling mud into drill string 21 at a first flowrate that is reduced by a predetermined percentage from the maximum mud flowrate of drilling system 10. In some embodiments, the first flowrate of drilling mud from surface pump 23 comprises approximately 1%-30% of the maximum mud flowrate of drilling system 10; however, in other embodiments, the first flowrate may vary. In this embodiment, surface pump 23 continues to pump drilling mud into drill string 21 at the first flowrate for a predetermined second time period while rotary system 24 remains inactive. In some embodiments, the second time period comprises approximately 15-120 seconds; however, in other embodiments, the second time period may vary.

[00120] During the second time period rotational torque is transmitted to bearing mandrel 620 via rotor 70 of power section 60 and driveshaft 520. Additionally, torque applied to bearing mandrel 620 is transmitted to actuator housing 740 via the meshing engagement between teeth 824 of teeth ring 820 and teeth 810 of locker piston 802. Rotational torque applied to actuator housing 740 via locker assembly 800 is transmitted to housings 310, 720, which rotate in the first rotational direction relative lower adjustment mandrel 770. Particularly, lower offset housing 720 rotates until one of the shoulders 728S of lower offset housing 720 contacts second shoulder 781B of the upper arcuate recess 780 of lower adjustment mandrel 770, restricting further rotation of lower offset housing 720 in the first rotational direction. Following the rotation of lower offset housing 720, bend adjustment assembly 700 is disposed in the first bent position 705, thereby forming the first deflection angle θ_1 of assembly 700 between drill bit 90 and drill string 21.

[00121] Following the second time period, with bend adjustment assembly 700 now disposed in the first bent position 705, the flowrate of drilling mud from surface pump 23 is increased from the first flowrate to a second flowrate that is greater than the first flowrate to displace locking piston 790 back into the locked position with keys 794 now received in the second pair of long slots 784B of lower adjustment mandrel 770. In some embodiments, the second flowrate of drilling mud from surface pump 23 comprises the drilling flowrate (e.g., approximately 50%-100% of 50%-80% of the maximum mud flowrate of drilling system 10); however, in other embodiments, the second flowrate may vary. Additionally, with drilling mud flowing through drilling assembly 50 from drill string 21 at the second flowrate, locker piston 802 is disengaged from teeth ring 820, preventing torque from being transmitted from

bearing mandrel 620 to actuator housing 740. With locking piston 790 now disposed in the locked position and locker piston 802 being disengaged from teeth ring 820, drilling assembly 50 may resume drilling borehole 16.

[00122] When it is desired to actuate bend adjustment assembly 700 from the first bent position 705 to the second bent position and thereby provide the second deflection angle θ_2 of assembly 700 between drill bit 90 and drill string 21, rotation of drill string 21 by rotary system 24 is ceased and the mud flowrate of surface pump 23 is increased to a third flowrate that is greater than the drilling flowrate. In some embodiments, the third flowrate of drilling mud from surface pump 23 comprises approximately 80%-100% of the maximum mud flowrate of drilling system 10; however, in other embodiments, the first flowrate may vary. The increased flowrate provided by the third flowrate increases the hydraulic pressure acting against the lower end 790B of locking piston 790, with locking piston 790 transmitting the hydraulic pressure force applied against lower end 790B to lower adjustment mandrel 770 via contact between keys 794 of locking piston 790 and the lower end 770B of lower adjustment mandrel 770. In this embodiment, the force applied to lower adjustment mandrel 770 from locking piston 790 is sufficient to shear the shear pin 788, thereby allowing both locking piston 790 and lower adjustment mandrel 770 to shift or move axially upwards through lower offset housing 720 and upper offset housing 702 until lower adjustment mandrel 770 is disposed in the second axial position with the upper end 770A of lower adjustment mandrel 770 contacting shoulder 718 of upper housing extension 710. Following the displacement of lower adjustment mandrel 770 into the second axial position, locking shoulder 728 of lower offset housing 720 is received in lower arcuate recess 778 (and is spaced from the inner end 780E of upper arcuate recess 780) of lower adjustment mandrel 770, with axially extending shoulders 728S of locking shoulder 728 circumferentially spaced from both the first and second shoulders 779A, 779B of upper arcuate recess 778.

[00123] Once lower adjustment mandrel 770 is disposed in the second axial position, the pumping of drilling mud from surface pump 23 is ceased for a predetermined third time period. In some embodiments, the third time period over which pumping is ceased from surface pump 23 comprises approximately 15-60 seconds; however, in other embodiments, the third time period may vary. With the flow of drilling fluid to power section 60 ceased, biasing member 754 displaces locking piston 790 from the locked position with keys 794 received in the second pair of long slots 784B of lower

adjustment mandrel 770, to the unlocked position with keys 794 free from long slots 784B, thereby unlocking lower offset housing 720 from lower adjustment mandrel 770.

[00124] Following the third time period, surface pump 23 resumes pumping drilling mud into drill string 21 at the first flowrate for a predetermined fourth time period while rotary system 24 remains inactive. In some embodiments, the fourth time period comprises approximately 15-120 seconds; however, in other embodiments, the fourth time period may vary. During the fourth time period rotational torque is transmitted to actuator housing 740 via the meshing engagement between teeth 824 of teeth ring 820 and teeth 810 of locker piston 802. Rotational torque applied to actuator housing 740 via locker assembly 800 is transmitted to housings 310, 720, which rotate in the first rotational direction relative lower adjustment mandrel 770. Particularly, lower offset housing 720 rotates until one of the shoulders 728S of lower offset housing 720 contacts second shoulder 779B of the lower arcuate recess 778 of lower adjustment mandrel 770, restricting further rotation of lower offset housing 720 in the first rotational direction. Following the rotation of lower offset housing 720, bend adjustment assembly 700 is disposed in the second bent position, thereby forming the second deflection angle θ_2 of assembly 700 between drill bit 90 and drill string 21. With bend adjustment assembly 700 now disposed in the second bent position, the flowrate of drilling mud from surface pump 23 is increased from the first flowrate to the second flowrate to displace locking piston 790 back into the locked position with keys 794 now received in short slots 782 of lower adjustment mandrel 770. Additionally, with drilling mud flowing through drilling assembly 50 from drill string 21 at the second flowrate, locker piston 802 is disengaged from teeth ring 820, preventing torque from being transmitted from bearing mandrel 620 to actuator housing 740. With locking piston 790 now disposed in the locked position and locker piston 802 being disengaged from teeth ring 820, drilling assembly 50 may resume drilling borehole 16.

[00125] In this embodiment, the transition of locking piston 790 into the locked position with keys 794 received in short slots 782 of lower adjustment mandrel 770 is indicated or registered at the surface by an increase in pressure at the outlet of surface pump 23 in response to the formation of a flow restriction in bend adjustment assembly 700. Particularly, as shown particularly in Figures 35 and 36, in this embodiment, lower offset housing 720 comprises a ring 734 coupled to the inner

surface 722 thereof, ring 734 including a radial port 736 extending therethrough that is circumferentially and axially aligned with a radial port 738 formed in lower offset housing 720. When keys 794 are received in one of the pairs of long slots 784A, 784B of lower adjustment mandrel 770 (shown in Figure 33), radial ports 736, 738 of ring 734 and lower offset housing 720, respectively, are not covered by locking piston 790, with the lower end 790B of locking piston 790 being disposed adjacent or axially spaced from radial ports 736, 738. In the position of locking piston 790 shown in Figure 35, when drilling mud is pumped from surface pump 23 through bend adjustment assembly 700, a portion of the pumped drilling mud may be bled into borehole 16 via ports 736, 738, thereby reducing the pressure at the outlet of surface pump 23 at a given flowrate of surface pump 23.

[00126] Conversely, when keys 794 are received in short slots 782 of lower adjustment mandrel 770 (shown in Figure 36), radial ports 736, 738 of ring 734 and lower offset housing 720, respectively, are obstructed or covered by locking piston 790, with the lower rend 790B of locking piston 790 being disposed axially below radial ports 736, 738. In the position of locking piston 790 shown in Figure 36, when drilling mud is pumped from surface pump 23 through bend adjustment assembly 700, the pumped drilling mud is obstructed from flowing through radial ports 736, 738, thereby providing a pressure signal at the surface by increasing the pressure at the outlet of surface pump 23 at the given flowrate of surface pump 23. In other words, at a fixed flowrate of drilling mud pumped from surface pump 23, the pressure at the outlet of surface pump 23 will be less when keys 794 of locking piston 790 are received in one of the pairs of long slots 784A, 784B of lower adjustment mandrel 770 (corresponding with the unbent position 704 and the first bent position 705 of bend adjustment assembly 700) than when keys 794 are received in short slots 782 (corresponding with the second bent position of bend adjustment assembly 700). In other embodiments, locking piston 790 and/or lower adjustment mandrel 770 may be configured such that the pressure signal is provided at the surface when bend adjustment assembly 700 is in the unbent position 703 and/or the first bent position 705 rather than the second bent position. In other words, locking piston 790 and/or lower adjustment mandrel 770 may be configured such that the pressure signal is provided when bend adjustment assembly 700 is not at a maximum bend setting (e.g., the second deflection angle θ_2 of assembly 700), whereas, in this embodiment,

the pressure signal is provided when bend adjustment assembly 700 is at the maximum bend setting.

[00127] On occasion, it may be desirable to shift bend adjustment assembly 700 from the second bent position (corresponding with the second deflection angle θ_2 of assembly 700) to the unbent position 703. In this embodiment, bend adjustment assembly 700 is actuated from the second bent position to the unbent position 703 by ceasing the pumping of drilling fluid from surface pump 23 for a predetermined fifth period of time. Either concurrent with the fifth time period or following the start of the fifth time period, rotary system 24 is activated to rotate drill string 21 at the actuation rotational speed for a predetermined sixth period of time. In some embodiments, both the fifth time period and the sixth time period each comprise approximately 15-120 seconds; however, in other embodiments, the fifth and sixth time periods may vary. During the sixth time period, with drill string 21 rotating at the actuation rotational speed, reactive torque is applied to bearing housing 610 via physical engagement between stabilizers 611 and the wall 19 of borehole 16, thereby rotating lower offset housing 720 relative to lower adjustment mandrel 770 in the second rotational direction. Rotation of lower offset housing 720 causes locking shoulder 728 to rotate through lower arcuate recess 778 of lower adjustment mandrel 770 until a shoulder 728S of locking shoulder 728 contacts the first shoulder 779A of lower arcuate recess 778, restricting further rotation of lower offset housing 720 in the second rotational direction. Following the fifth and sixth time periods (the sixth time period ending either at the same time as the fifth time period or after the fifth time period has ended), drilling mud is pumped through drill string 21 from surface pump 23 at the drilling flowrate to permit drilling assembly 50 to continue drilling borehole 16 with bend adjustment assembly 700 disposed in the unbent position 703 such that no deflection angle is provided between the longitudinal axis 95 of drill bit 90 and the longitudinal axis 25 of drill string 21. Although in this embodiment the bend 701 of drilling assembly 50 may be adjusted by altering a flowrate of drilling fluid through bend adjustment assembly 700, in other embodiments, bend 701 provided by drilling system 50 may be adjusted through other mechanisms, such as an electrically actuated mechanism responsive to control signals transmitted from the surface via telemetry system 30. In still other embodiments, bend adjustment assembly 700 may be actuated in response to changes in RPM of drilling assembly 50 or other drilling parameters. In some

embodiments, the actuation of bend adjustment assembly 700 may occur automatically in response to drilling conditions.

[00128] Drilling assembly 50 of drilling system 10 may be used as part of a directional drilling operation to form a deviated borehole (e.g., borehole 16) without the need of a RSS. Particularly, given that the angular orientation of drilling assembly 50 may be controlled via torque control assembly 100, and the bend 701 provided by drilling assembly 50 may be controlled by bend adjustment assembly 700, drill bit 90 may be steered by torque control assembly 100 and bend adjustment assembly 700 to control the three-dimensional trajectory of deviated borehole 16. For example, borehole 16 may be drilled for a first period of time by drilling assembly 50 where drilling assembly is operated in the third mode and with bend adjustment assembly 700 in the second bent position providing the second deflection angle θ_2. In some embodiments, the operation of drilling assembly 50 in the third mode and the second bent position may comprise a primary drilling mode of drilling assembly 50. After the first period of time of drilling borehole 16 with drilling assembly 50 in the primary drilling configuration has elapsed, the drill string 21 may be halted to actuate drilling assembly 50 from the primary drilling mode to a secondary drilling mode unlocking the stator assembly 142 from rotor 50 whereby the amount of torque transmitted to stator assembly 142 of torque control assembly 100 may be adjusted. Surveys may then be taken with known MWD tools of drilling assembly 50, such as accelerometers and magnetometers to measure inclination and azimuth and are generally capable of taking directional surveys in real time. The MWD data provided by the MWD tools of drilling assembly 50 may then be transmitted to the surface via telemetry system 30 and indicated to an operator of drilling system 10.

[00129] At the surface, the survey results may be reviewed and calculations can be made to determine whether borehole 16 is on-course or off-course. If it is determined following a survey that borehole 16 is off course and course deviation is necessary, the angular orientation of drilling assembly 50 (e.g., the angular orientation of drilling assembly 50 respective central axis 105 of torque control assembly 100) is reset. In some embodiments, the angular orientation of drilling assembly 50 is reset by rotating drill string 21 from the surface via rotary system 24 at the first rotational rate corresponding to the first mode of torque control assembly 100 to thereby obtain the desired angular orientation or “tool face” of drilling assembly 50 in order to correct the direction of borehole 16. In this embodiment, the downhole speed of drill string 21 is

maintained within a low range (e.g., 2-3 RPM) while the angular orientation of drilling assembly is adjusted or oriented into the desired or predetermined angular orientation, corresponding to the first mode of operation described above. Additionally, bend adjustment assembly 700 may be actuated to adjust the deflection angle θ provided along drilling assembly 50 as described above to assist with returning borehole 16 to the correct course. For example, in some embodiments, bend adjustment assembly 700 is actuated into the first bent position 705 to provide first deflection angle θ_1.

[00130] Once the tool face has been set, drilling assembly 50 is halted for a predefined wait period. In this embodiment, the predefined wait period is approximately between 30 seconds and 60 seconds; however, in other embodiments, the length of the predefined wait period may vary. Electronics package 420, via sensor packages 424, is configured to recognize that drilling assembly 50 has halted for the wait period, and records the "tool face setting" or angular orientation of drilling assembly 50 as an angular orientation datum in the memory of electronics package 420. Electronics package 420 stores and retains the angular orientation datum in the memory thereof until drilling assembly 50 is again halted for the predetermined wait period. Thus, angular orientation datum is retained by electronics package 420 as long as the halt time of drilling assembly 50 does not exceed the wait period.

[00131] Drill string 21 may then be rotated be rotated by rotary system 24 such that the downhole speed of drill string 21 is approximately 10-30 RPM, corresponding to the second mode of operation of torque control assembly 100. With torque control assembly 100 operating the second mode, the angular orientation or tool face setting of drilling assembly 50 is maintained or held automatically by the operation of torque control assembly 100. Particularly, while operating in the second mode, electronics package 420 varies the rotational position of rotary pilot valve 280 (via actuator 350) to maintain the angular orientation of drilling assembly 50 in borehole 16. In this mode, the drill string 21 can be rotationally driven by rotary system 24 while the angular orientation of drilling system 50 is steered to the correct course via torque control assembly 100 and bend adjustment assembly 700.

[00132] After a defined drilling period operating in the second mode of torque control assembly 100, another survey may be carried out using the MWD tools of drilling system 50, and the results of the survey may be transmitted to the surface. The drilling assembly 50 may be halted for a time less than the wait period, and the previously defined angular orientation datum being retained by the electronics

package 420 of electronics sub 400. If the survey indicates that borehole 16 is still off course, and further is correction is required in the same direction, no change to the angular orientation of drilling system 50 is required and the angular orientation datum of drilling assembly 50 as well as the deflection angle θ provided by bend adjustment assembly 700 may be maintained for the subsequent drilling period. Drilling of borehole 16 may then be continued with torque control assembly operating in the second mode. However, if after the survey it is determined that no further deviation is required, torque control assembly 100 may be operated in the third mode with, in this embodiment, the downhole speed of drill string 21 being maintained at greater than 30 RPM. Additionally, bend adjustment assembly 700 may be actuated to return drilling assembly 50 to the previous deflection angle θ. Alternatively, an operator of drilling system 10 may choose to proceed in the third mode of torque control assembly 100 for a short period, and then conduct further surveys to determine whether the correct course has been achieved.

[00133] During the survey, drilling assembly 50 may again be halted for a period less that the pre-determined wait period, thereby maintaining the angular orientation datum in the memory of electronics package 420. If borehole 16 remains off-course, torque control assembly 100 may again be operated in the second mode for a further period, at the previously set angular orientation datum, to make additional course correction. Additionally, bend adjustment assembly 700 may again be actuated to adjust the deflection angle θ provided by drilling system 50 to assist with returning borehole 16 to the correct course. Therefore, drilling assembly 50 is intended to provide a significant advantage over known methods since there is no need for the operator to recalculate and reset the tool face after subsequent sections of drilling ahead (straight through drilling) and path correction drilling, allowing borehole 16 to be drilled more quickly and efficiently. Moreover, drilling system 50 allows for the drilling of deviated borehole 16 without the need of a RSS, where RSS tools are often complex and expensive, and have limited run times due to battery and electronic limitations.

[00134] While disclosed embodiments have been shown and described, modifications thereof can be made by one skilled in the art without departing from the scope or teachings herein. The embodiments described herein are exemplary only and are not limiting. Many variations and modifications of the systems, apparatus, and processes described herein are possible and are within the scope of the disclosure. Accordingly, the scope of protection is not limited to the embodiments described

herein, but is only limited by the claims that follow, the scope of which shall include all equivalents of the subject matter of the claims. Unless expressly stated otherwise, the steps in a method claim may be performed in any order. The recitation of identifiers such as (a), (b), (c) or (1), (2), (3) before steps in a method claim are not intended to and do not specify a particular order to the steps, but rather are used to simplify subsequent reference to such steps.

CLAIMS

What is claimed is:

1. A rotary steerable drilling assembly for directional drilling, comprising:

a driveshaft rotatably disposed in a driveshaft housing;

a bend adjustment assembly coupled to the driveshaft housing;

a bearing mandrel coupled to the bend adjustment assembly; and

a torque control assembly comprising:

a rotor configured to couple with a drill string;

a stator assembly coupled to the downhole motor; and

a torque control actuator assembly configured to control the amount of torque transmitted between the rotor and the stator assembly;

wherein the bend adjustment assembly includes a first position configured to provide a first deflection angle between a longitudinal axis of the driveshaft housing and a longitudinal axis of the bearing mandrel; and

wherein the bend adjustment assembly includes a second position configured to provide a second deflection angle between the longitudinal axis of the driveshaft housing and the longitudinal axis of the bearing mandrel, the second deflection angle being different from the first deflection angle.

2. The drilling assembly of claim 1, wherein the torque control actuator assembly is configured to selectably adjust a restriction to a fluid flow along a circulation flowpath extending between the rotor and the stator assembly.

3. The drilling assembly of claim 2, wherein the torque control actuator assembly comprises a spool valve comprising a cylinder including a port and a piston slidably disposed in the cylinder, wherein the circulation flowpath extends through the port of the cylinder.

4. The drilling assembly of claim 3, wherein the torque control actuator assembly comprises:

a rotary pilot valve rotatably disposed in a valve body; and

an actuator coupled with the rotary pilot valve;

wherein the actuator is configured to selectably rotate the rotary pilot valve relative to the valve body; and

wherein the rotary pilot valve is configured to adjust an axial position of the piston of the spool valve in response to relative rotation between the rotary pilot valve and the valve body.

5. The drilling assembly of claim 2, wherein the stator assembly comprises an outer housing and an inner stator, and wherein the circulation flowpath extends between the outer housing and the inner stator.

6. The drilling assembly of claim 1, further comprising a bend adjustment actuator assembly configured to move the bend adjustment assembly between the first position and the second position in response to a change in flowrate of a drilling fluid received by the downhole motor.

7. The drilling assembly of claim 6, wherein the bend adjustment actuator assembly comprises:

a locker piston coupled to an actuator housing of the bend adjustment assembly, the locker piston comprising a first set of teeth; and

a teeth ring coupled to the bearing mandrel, the teeth ring comprising a second set of teeth configured to matingly engage the first set of teeth and to transmit torque between the bearing mandrel and the actuator housing.

8. The drilling assembly of claim 7, wherein the locker piston has a first end configured to receive fluid pressure equal to fluid pressure in the surrounding environment and a second end configured to receive fluid pressure equal to fluid pressure of the drilling fluid flowing through the bend adjustment assembly.

9. The drilling assembly of claim 1, wherein the bend adjustment assembly further comprises a locking piston that includes a locked position preventing actuation of the bend adjustment assembly between the first and second positions, and an unlocked position permitting actuation of the bend adjustment assembly between the first and second positions.

10. The drilling assembly of claim 1, wherein the bend adjustment assembly includes a third position that provides a third deflection angle between the longitudinal axis of the driveshaft housing and the longitudinal axis of the bearing mandrel, the third deflection angle being different from both the first deflection angle and the second deflection angle.

11. The drilling assembly of claim 1, wherein the torque control assembly comprises:

a first mode configured to adjust an angular orientation of the drilling assembly within a wellbore; and

a second mode configured to hold the angular orientation of the drilling assembly within the wellbore;

wherein the torque control assembly is actuated between the first mode and the second mode in response to altering a rotational rate of the drill string.

12. The drilling assembly of claim 11, wherein the torque control assembly comprises a third mode configured to restrict relative rotation between the rotor and the stator assembly, and wherein the torque control assembly is actuated into the third mode in response to altering the rotational rate of the drill string.

13. The drilling assembly of claim 12, wherein the torque control assembly is configured to:

actuate from the first mode to the second mode in response to the rotational rate of the drill string being increased from a first rotational rate to a second rotational rate that is greater than the first rotational rate; and

actuate into the third mode in response to the rotational rate of the drill string being increased from to a third rotational rate that is greater than both the first rotational rate and the second rotational rate.

14. A drilling system for drilling a borehole that extends through a subterranean earthen formation, the system comprising:

a drilling rig;

a drill string extending from the drilling rig into the borehole;

a drilling assembly coupled to an end of the drill string and comprising:

a driveshaft rotatably disposed in a driveshaft housing;

a bend adjustment assembly coupled to the driveshaft housing;

a bearing mandrel coupled to the bend adjustment assembly;

a torque control assembly comprising:

a rotor configured to couple with a drill string;

a stator assembly coupled to the downhole motor; and

an actuator configured to control the amount of torque transmitted between rotor and the stator assembly;

wherein the bend adjustment assembly includes a first position configured to provide a first deflection angle between a longitudinal axis of the driveshaft housing and a longitudinal axis of the bearing mandrel; and

wherein the bend adjustment assembly includes a second position configured to provide a second deflection angle between the longitudinal axis of the driveshaft housing and the longitudinal axis of the bearing mandrel, the second deflection angle being different from the first deflection angle.

15. The drilling system of claim 14, wherein the torque control actuator assembly comprises:

a spool valve comprising a cylinder including a port and a piston slidably disposed in the cylinder;

wherein the torque control actuator assembly is configured to selectably adjust a restriction to a fluid flow along a circulation flowpath extending between the rotor and the stator assembly and through the port of the cylinder.

16. The drilling system of claim 15, wherein the torque control actuator assembly comprises:

a rotary pilot valve rotatably disposed in a valve body; and

an actuator coupled with the rotary pilot valve;

wherein the actuator is configured to selectably rotate the rotary pilot valve relative to the valve body;

wherein the rotary pilot valve is configured to adjust an axial position of the piston of the spool valve in response to relative rotation between the rotary pilot valve and the valve body.

17. The drilling system of claim 16, wherein:

the torque control assembly comprises an electronics package that is in signal communication with the drilling rig via a telemetry system; and

wherein the electronics package is configured to transmit a control signal to the actuator to control the rotation of the rotary pilot valve relative to the valve body.

18. The drilling system of claim 14, wherein the stator assembly comprises an outer housing and an inner stator, and wherein the circulation flowpath extends between the outer housing and the inner stator.

19. The drilling system of claim 14, wherein the drilling assembly further comprises a bend adjustment actuator assembly configured to move the bend adjustment assembly between the first position and the second position in response to a change in flowrate of a drilling fluid received by the downhole motor.

20. The drilling system of claim 19, wherein the bend adjustment actuator assembly comprises:

a locker piston coupled to an actuator housing of the bend adjustment assembly, the locker piston comprising a first set of teeth; and

a teeth ring coupled to the bearing mandrel, the teeth ring comprising a second set of teeth configured to matingly engage the first set of teeth and to transmit torque between the bearing mandrel and the actuator housing.

21. The drilling system of claim 14, wherein the bend adjustment assembly further comprises a locking piston that includes a locked position preventing actuation of the bend adjustment assembly between the first and second positions, and an unlocked position permitting actuation of the bend adjustment assembly between the first and second positions.

22. The drilling system of claim 14, wherein the torque control assembly comprises:

a first mode configured to adjust an angular orientation of the drilling assembly within the wellbore;

a second mode configured to hold the angular orientation of the drilling assembly; and

a third mode configured to restrict relative rotation between the rotor and the stator assembly;

wherein the torque control assembly is actuated between the first mode, the second mode, and the third mode in response to altering a rotational rate of the drill string.

23. The drilling system of claim 22, wherein the torque control assembly is configured to:

actuate from the first mode to the second mode in response to the rotational rate of the drill string being increased from a first rotational rate to a second rotational rate that is greater than the first rotational rate; and

actuate into the third mode in response to the rotational rate of the drill string being increased from to a third rotational rate that is greater than both the first rotational rate and the second rotational rate.

24. A method for forming a deviated borehole, comprising:

(a) transmitting torque between a rotor coupled to a drill string and a stator assembly of a drilling assembly to orient the drilling assembly in a predetermined angular orientation within a wellbore; and

(b) actuating a bend adjustment assembly of the drilling assembly from a first position providing a first deflection angle between a longitudinal axis of a driveshaft housing and a longitudinal axis of a bearing mandrel coupled to the driveshaft housing to a second position that provides a second deflection angle between the longitudinal axis of the driveshaft housing and the longitudinal axis of a bearing mandrel, the second deflection angle being different from the first deflection angle.

25. The method of claim 24, further comprising:

(c) transmitting a control signal from an electronics package of the drilling assembly to an actuator of the drilling assembly to adjust a restriction to a fluid flow along a circulation flowpath extending between the rotor and the stator assembly.

26. The method of claim 24, further comprising:

(c) rotating a rotary pilot valve of the drilling assembly to adjust a position of a piston of a spool valve of the drilling assembly to adjust a restriction to a fluid flow along a circulation flowpath extending between the rotor and the stator assembly.

27. The method of claim 24, wherein (b) comprises:

(b1) ceasing the pumping of drilling fluid into the borehole from the surface pump for a first time period; and

(b2) following the first time period, pumping drilling fluid into the borehole from the surface pump at a first flowrate that is less than the drilling flowrate for a second time period.

28. The method of claim 24, wherein (a) comprises rotating the drill string at a first rotational rate.

29. The method of claim 28, further comprising:

(c) holding the drilling assembly in the predetermined angular orientation by increasing a rotational rate of the drill string from the first rotational rate to a second rotational rate that is greater than the first rotational rate; and

(d) restricting relative rotation between the rotor and the stator assembly by increasing the rotational rate of the drill string to a third rotational rate that is greater than both the first rotational rate and the second rotational rate.

30. The method of claim 29, wherein (c) comprises saving an angular orientation datum in a memory of the drilling assembly in response to holding the drilling assembly in the predetermined angular orientation for a predefined wait period.

AMENDED CLAIMS
received by the International Bureau on 04 April 2020 (04.04.2020)

What is claimed is:

1. A rotary steerable drilling assembly for directional drilling, comprising:

a driveshaft rotatably disposed in a driveshaft housing;

a bend adjustment assembly coupled to the driveshaft housing;

a bearing mandrel coupled to the bend adjustment assembly; and

a torque control assembly comprising:

a rotor configured to couple with a drill string;

a stator assembly coupled to a downhole motor; and

a torque control actuator assembly configured to control the amount of torque transmitted between the rotor and the stator assembly;

wherein the bend adjustment assembly includes a first position configured to provide a first deflection angle between a longitudinal axis of the driveshaft housing and a longitudinal axis of the bearing mandrel; and

wherein the bend adjustment assembly includes a second position configured to provide a second deflection angle between the longitudinal axis of the driveshaft housing and the longitudinal axis of the bearing mandrel, the second deflection angle being different from the first deflection angle.

2. The drilling assembly of claim 1, wherein the torque control actuator assembly is configured to selectably adjust a restriction to a fluid flow along a circulation flowpath extending between the rotor and the stator assembly.

3. The drilling assembly of claim 2, wherein the torque control actuator assembly comprises a spool valve comprising a cylinder including a port and a piston slidably disposed in the cylinder, wherein the circulation flowpath extends through the port of the cylinder.

4. The drilling assembly of claim 3, wherein the torque control actuator assembly comprises:

a rotary pilot valve rotatably disposed in a valve body; and

an actuator coupled with the rotary pilot valve;

wherein the actuator is configured to selectably rotate the rotary pilot valve relative to the valve body; and

wherein the rotary pilot valve is configured to adjust an axial position of the piston of the spool valve in response to relative rotation between the rotary pilot valve and the valve body.

5. The drilling assembly of claim 2, wherein the stator assembly comprises an outer housing and an inner stator, and wherein the circulation flowpath extends between the outer housing and the inner stator.

6. The drilling assembly of claim 1, further comprising a bend adjustment actuator assembly configured to move the bend adjustment assembly between the first position and the second position in response to a change in flowrate of a drilling fluid received by the downhole motor.

7. The drilling assembly of claim 6, wherein the bend adjustment actuator assembly comprises:

a locker piston coupled to an actuator housing of the bend adjustment assembly, the locker piston comprising a first set of teeth; and

a teeth ring coupled to the bearing mandrel, the teeth ring comprising a second set of teeth configured to matingly engage the first set of teeth and to transmit torque between the bearing mandrel and the actuator housing.

8. The drilling assembly of claim 7, wherein the locker piston has a first end configured to receive fluid pressure equal to fluid pressure in the surrounding environment and a second end configured to receive fluid pressure equal to fluid pressure of the drilling fluid flowing through the bend adjustment assembly.

9. The drilling assembly of claim 1, wherein the bend adjustment assembly further comprises a locking piston that includes a locked position preventing actuation of the bend adjustment assembly between the first and second positions,

and an unlocked position permitting actuation of the bend adjustment assembly between the first and second positions.

10. The drilling assembly of claim 1, wherein the bend adjustment assembly includes a third position that provides a third deflection angle between the longitudinal axis of the driveshaft housing and the longitudinal axis of the bearing mandrel, the third deflection angle being different from both the first deflection angle and the second deflection angle.

11. The drilling assembly of claim 1, wherein the torque control assembly comprises:

a first mode configured to adjust an angular orientation of the drilling assembly within a wellbore; and

a second mode configured to hold the angular orientation of the drilling assembly within the wellbore;

wherein the torque control assembly is actuated between the first mode and the second mode in response to altering a rotational rate of the drill string.

12. The drilling assembly of claim 11, wherein the torque control assembly comprises a third mode configured to restrict relative rotation between the rotor and the stator assembly, and wherein the torque control assembly is actuated into the third mode in response to altering the rotational rate of the drill string.

13. The drilling assembly of claim 12, wherein the torque control assembly is configured to:

actuate from the first mode to the second mode in response to the rotational rate of the drill string being increased from a first rotational rate to a second rotational rate that is greater than the first rotational rate; and

actuate into the third mode in response to the rotational rate of the drill string being increased from to a third rotational rate that is greater than both the first rotational rate and the second rotational rate.

14. A drilling system for drilling a borehole that extends through a subterranean earthen formation, the system comprising:

a drilling rig;

a drill string extending from the drilling rig into the borehole;

a drilling assembly coupled to an end of the drill string and comprising:

a driveshaft rotatably disposed in a driveshaft housing;

a bend adjustment assembly coupled to the driveshaft housing;

a bearing mandrel coupled to the bend adjustment assembly;

a torque control assembly comprising:

a rotor configured to couple with the drill string;

a stator assembly coupled to a downhole motor; and

a torque control actuator assembly configured to control the amount of torque transmitted between the rotor and the stator assembly;

wherein the bend adjustment assembly includes a first position configured to provide a first deflection angle between a longitudinal axis of the driveshaft housing and a longitudinal axis of the bearing mandrel; and

wherein the bend adjustment assembly includes a second position configured to provide a second deflection angle between the longitudinal axis of the driveshaft housing and the longitudinal axis of the bearing mandrel, the second deflection angle being different from the first deflection angle.

15. The drilling system of claim 14, wherein the torque control actuator assembly comprises:

a spool valve comprising a cylinder including a port and a piston slidably disposed in the cylinder;

wherein the torque control actuator assembly is configured to selectably adjust a restriction to a fluid flow along a circulation flowpath extending between the rotor and the stator assembly and through the port of the cylinder.

16. The drilling system of claim 15, wherein the torque control actuator assembly comprises:

a rotary pilot valve rotatably disposed in a valve body; and

an actuator coupled with the rotary pilot valve;

wherein the actuator is configured to selectably rotate the rotary pilot valve relative to the valve body;

wherein the rotary pilot valve is configured to adjust an axial position of the piston of the spool valve in response to relative rotation between the rotary pilot valve and the valve body.

17. The drilling system of claim 16, wherein:

the torque control assembly comprises an electronics package that is in signal communication with the drilling rig via a telemetry system; and

wherein the electronics package is configured to transmit a control signal to the actuator to control the rotation of the rotary pilot valve relative to the valve body.

18. The drilling system of claim 14, wherein the stator assembly comprises an outer housing and an inner stator, and wherein the circulation flowpath extends between the outer housing and the inner stator.

19. The drilling system of claim 14, wherein the drilling assembly further comprises a bend adjustment actuator assembly configured to move the bend adjustment assembly between the first position and the second position in response to a change in flowrate of a drilling fluid received by the downhole motor.

20. The drilling system of claim 19, wherein the bend adjustment actuator assembly comprises:

a locker piston coupled to an actuator housing of the bend adjustment assembly, the locker piston comprising a first set of teeth; and

a teeth ring coupled to the bearing mandrel, the teeth ring comprising a second set of teeth configured to matingly engage the first set of teeth and to transmit torque between the bearing mandrel and the actuator housing.

21. The drilling system of claim 14, wherein the bend adjustment assembly further comprises a locking piston that includes a locked position preventing actuation of the bend adjustment assembly between the first and second positions, and an unlocked position permitting actuation of the bend adjustment assembly between the first and second positions.

22. The drilling system of claim 14, wherein the torque control assembly comprises:

a first mode configured to adjust an angular orientation of the drilling assembly within the wellbore;

a second mode configured to hold the angular orientation of the drilling assembly; and

a third mode configured to restrict relative rotation between the rotor and the stator assembly;

wherein the torque control assembly is actuated between the first mode, the second mode, and the third mode in response to altering a rotational rate of the drill string.

23. The drilling system of claim 22, wherein the torque control assembly is configured to:

actuate from the first mode to the second mode in response to the rotational rate of the drill string being increased from a first rotational rate to a second rotational rate that is greater than the first rotational rate; and

actuate into the third mode in response to the rotational rate of the drill string being increased from to a third rotational rate that is greater than both the first rotational rate and the second rotational rate.

24. A method for forming a deviated borehole, comprising:

(a) transmitting torque between a rotor coupled to a drill string and a stator assembly of a drilling assembly to orient the drilling assembly in a predetermined angular orientation within a wellbore; and

(b) actuating a bend adjustment assembly of the drilling assembly from a first position providing a first deflection angle between a longitudinal axis of a driveshaft housing and a longitudinal axis of a bearing mandrel coupled to the driveshaft housing to a second position that provides a second deflection angle between the longitudinal axis of the driveshaft housing and the longitudinal axis of the bearing mandrel, the second deflection angle being different from the first deflection angle.

25. The method of claim 24, further comprising:

(c) transmitting a control signal from an electronics package of the drilling assembly to an actuator of the drilling assembly to adjust a restriction to a fluid flow along a circulation flowpath extending between the rotor and the stator assembly.

26. The method of claim 24, further comprising:

(c) rotating a rotary pilot valve of the drilling assembly to adjust a position of a piston of a spool valve of the drilling assembly to adjust a restriction to a fluid flow along a circulation flowpath extending between the rotor and the stator assembly.

27. The method of claim 24, wherein (b) comprises:

(b1) ceasing the pumping of drilling fluid into the borehole from a surface pump for a first time period; and

(b2) following the first time period, pumping drilling fluid into the borehole from the surface pump at a first flowrate that is less than the drilling flowrate for a second time period.

28. The method of claim 24, wherein (a) comprises rotating the drill string at a first rotational rate.

29. The method of claim 28, further comprising:

(c) holding the drilling assembly in the predetermined angular orientation by increasing a rotational rate of the drill string from the first rotational rate to a second rotational rate that is greater than the first rotational rate; and

(d) restricting relative rotation between the rotor and the stator assembly by increasing the rotational rate of the drill string to a third rotational rate that is greater than both the first rotational rate and the second rotational rate.

30. The method of claim 29, wherein (c) comprises saving an angular orientation datum in a memory of the drilling assembly in response to holding the drilling assembly in the predetermined angular orientation for a predefined wait period.

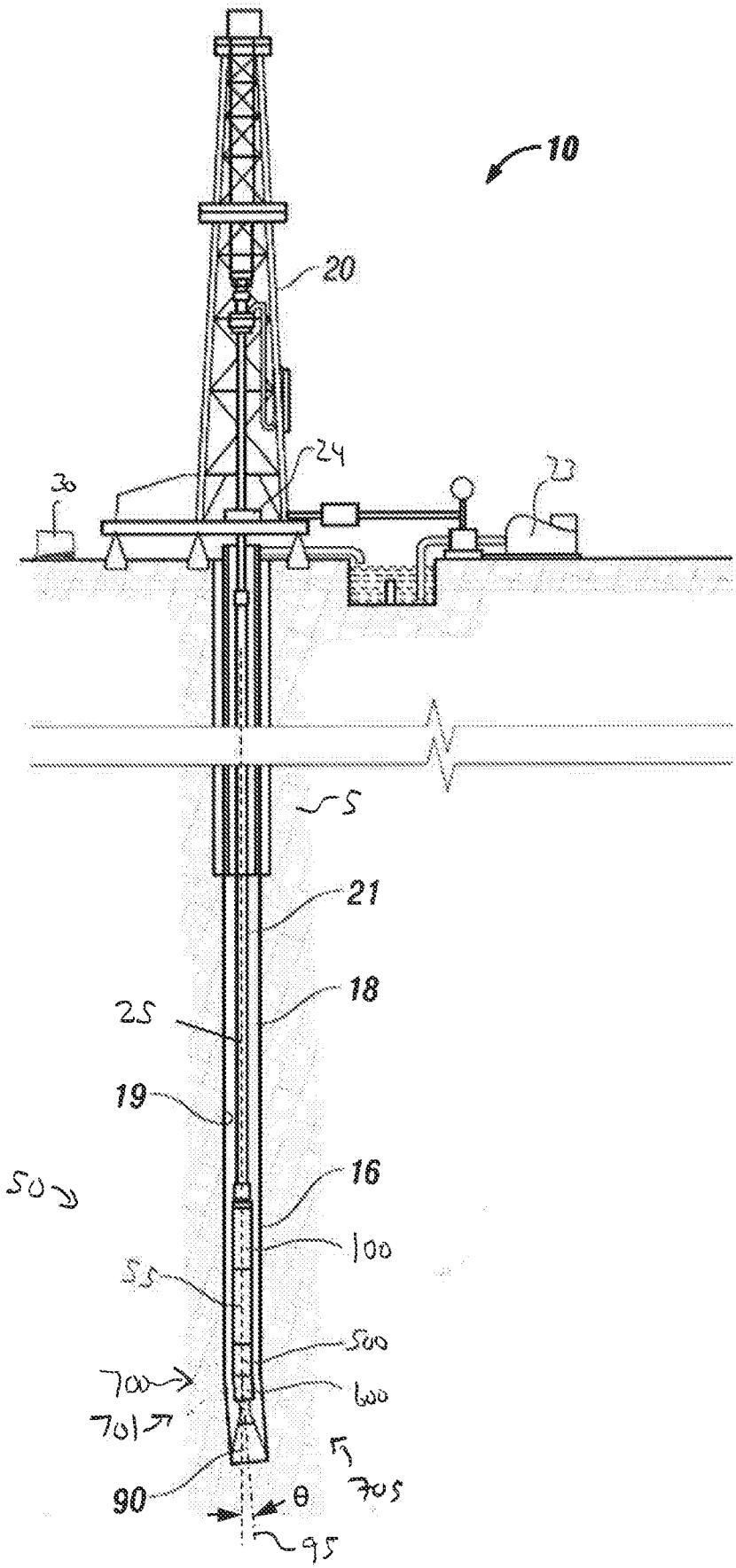

FIG 1

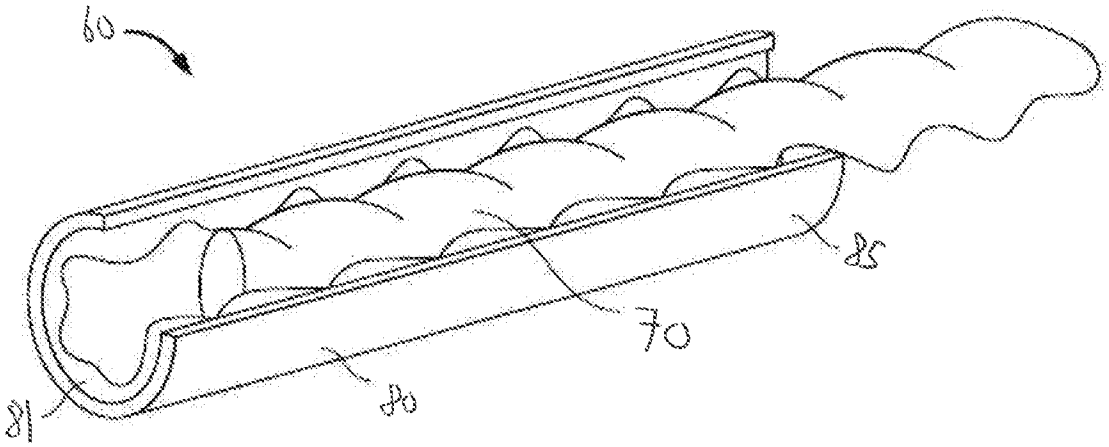

FIG 2

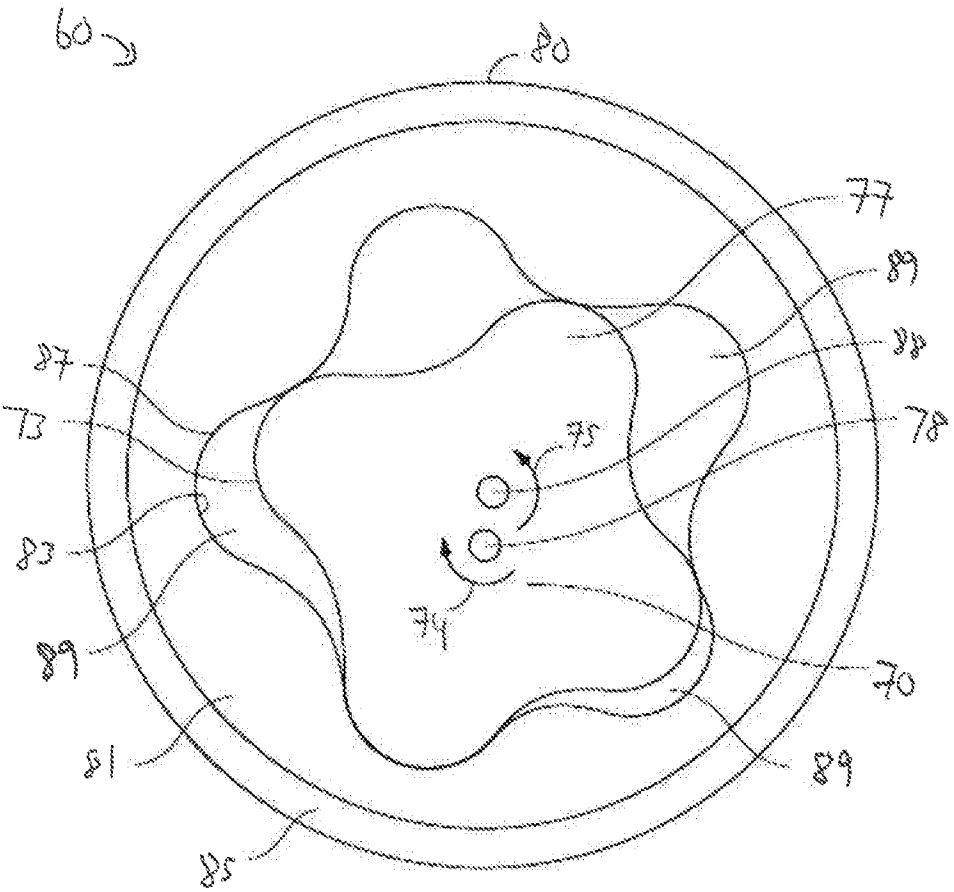

FIG 3

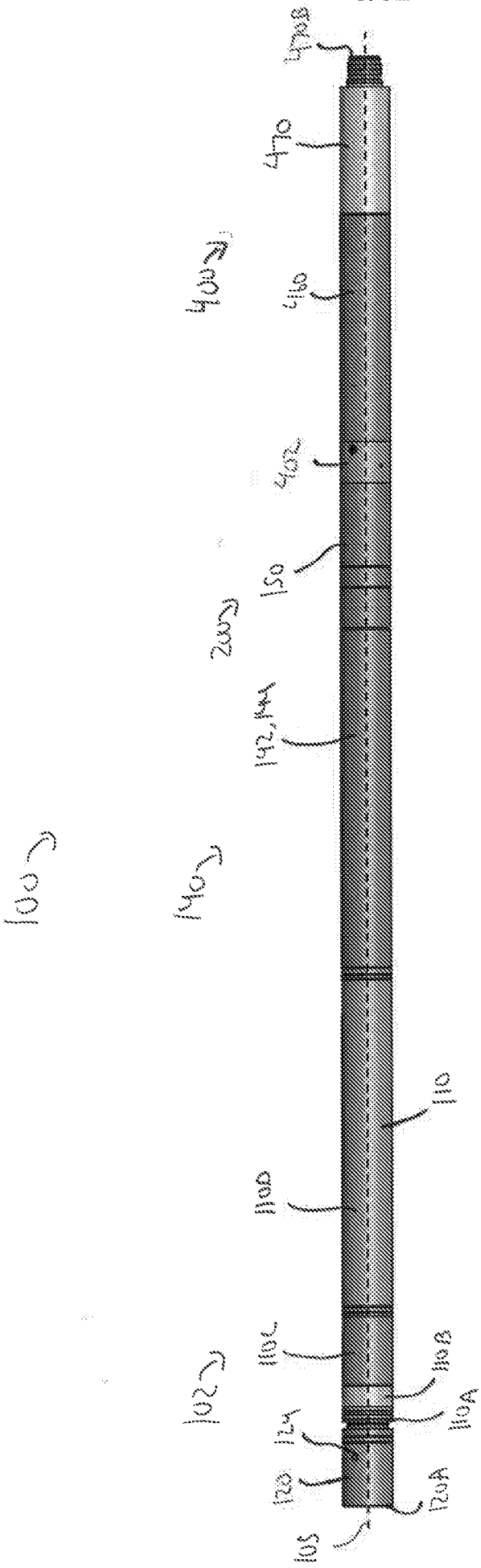
470B
470
480
460
402
150
235
142, 144
100
140
110
110D
110C
110B
110A
102
124
120
120A
105

FIG 4

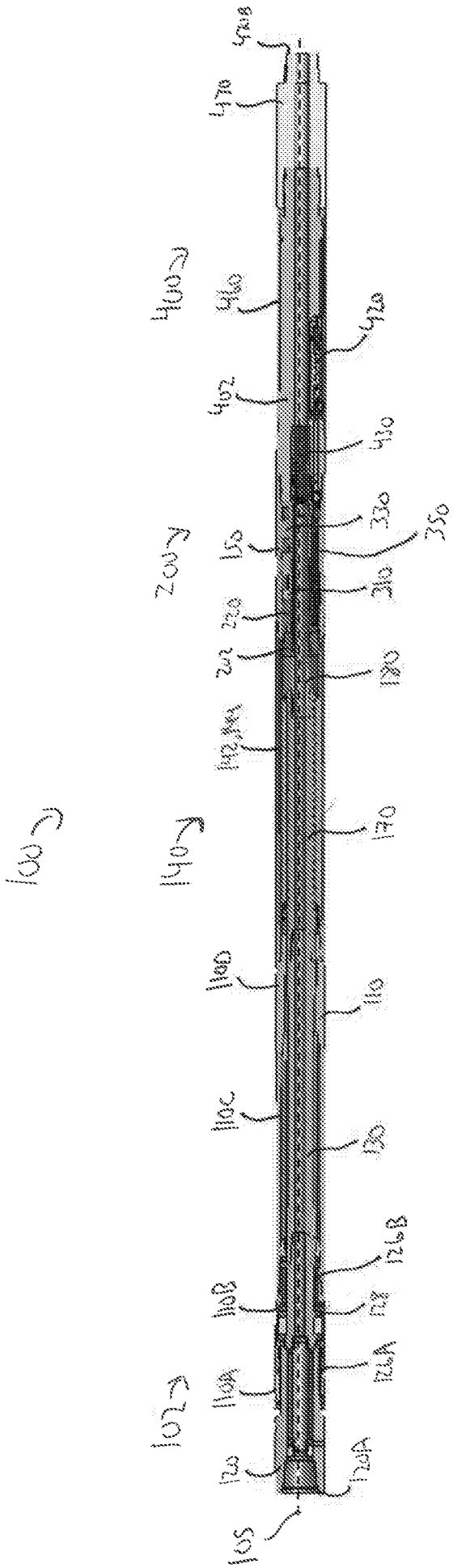
400
460
420
402
430
330
350
200
150
310
220
202
180
142,144
170
100
140
110D
110
110C
130
126B
110B
128
126A
110A
102
120
120A
105

FIG 5

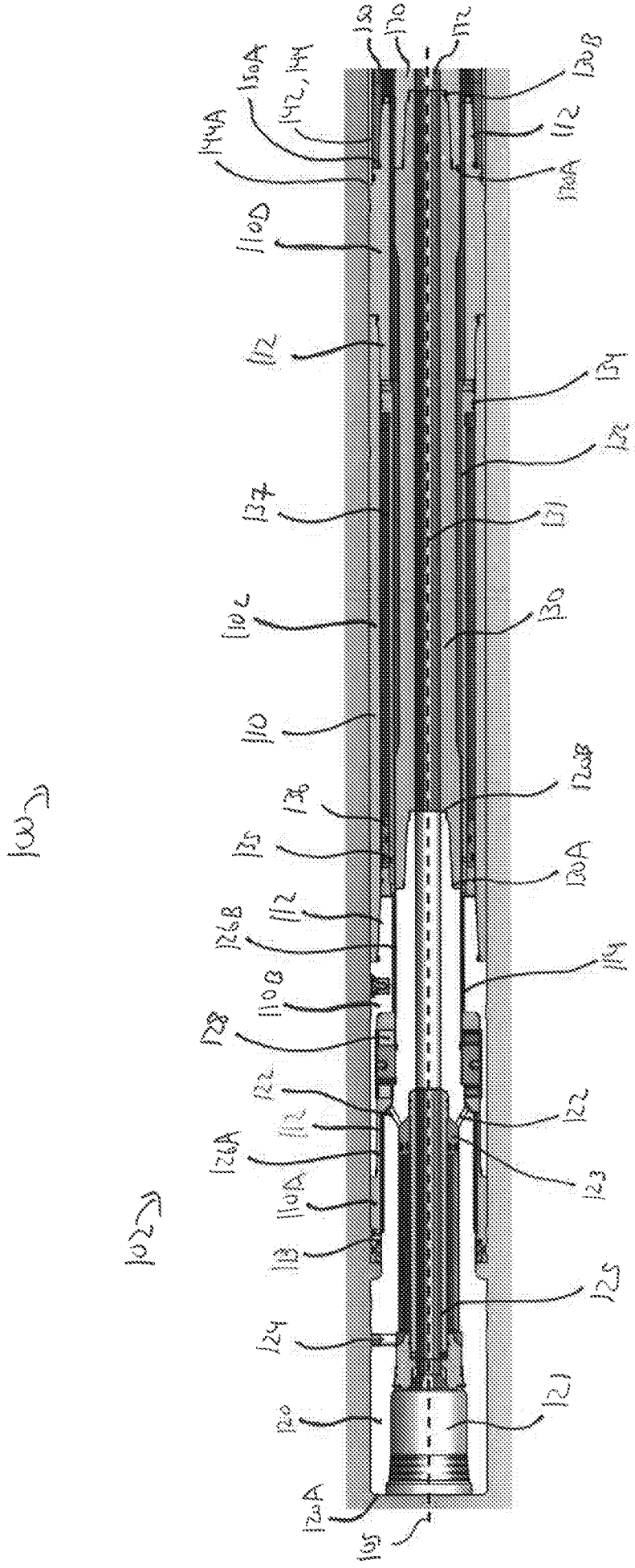
100
102
110
110A
110B
110C
110D
112
114
120
120A
120B
121
122
123
124
125
126A
126B
128
130
130A
130B
131
132
134
135
136
137
142, 144
144A
150
150A
170
172
105

FIG 6

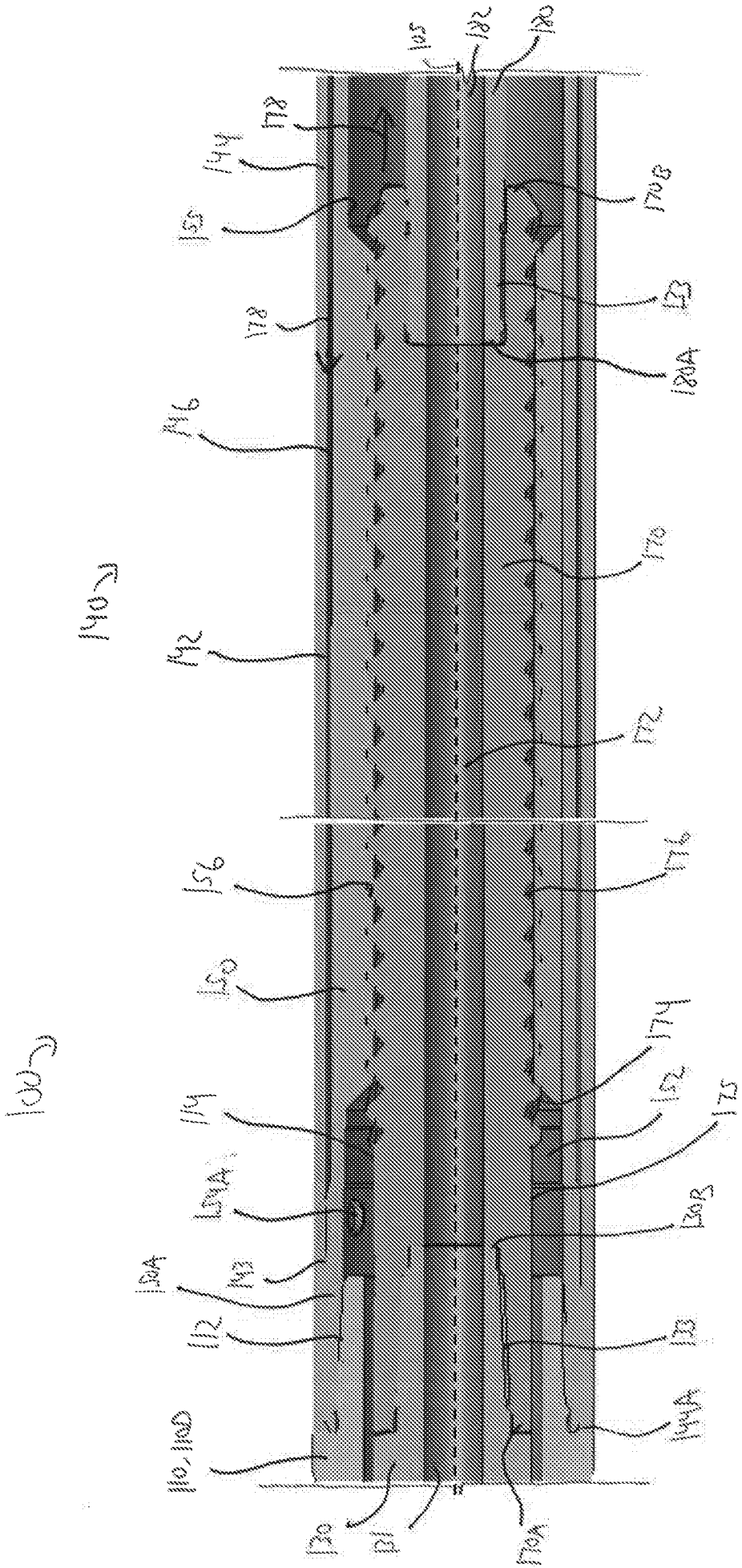
105
182
180
178
144
155
170B
133
178
180A
146
170
140
142
172
156
176
150
174
100
114
152
175
154A
130B
143
130A
112
133
144A
110, 110D
130
131
170A

FIG 7

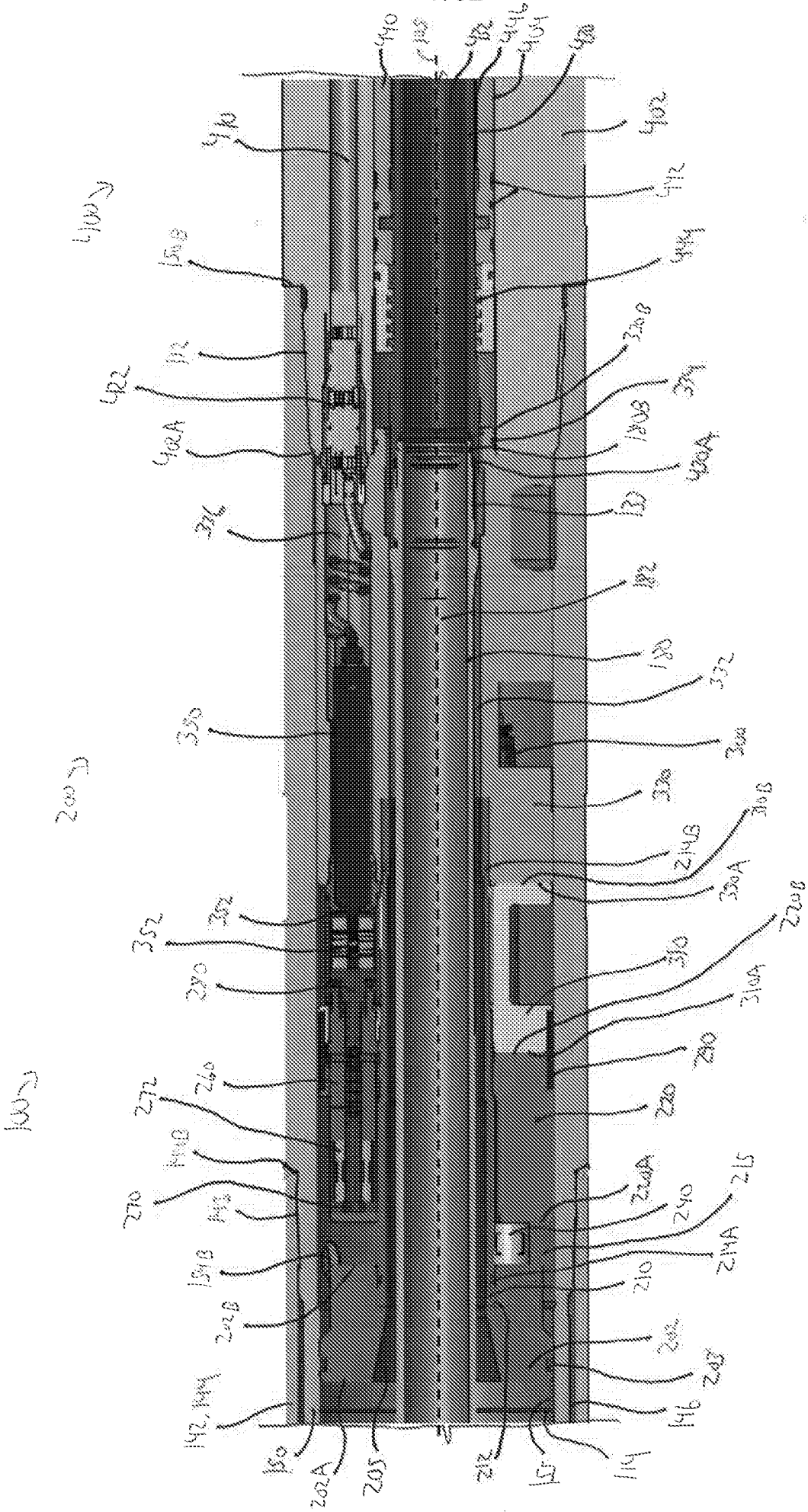

FIG 8

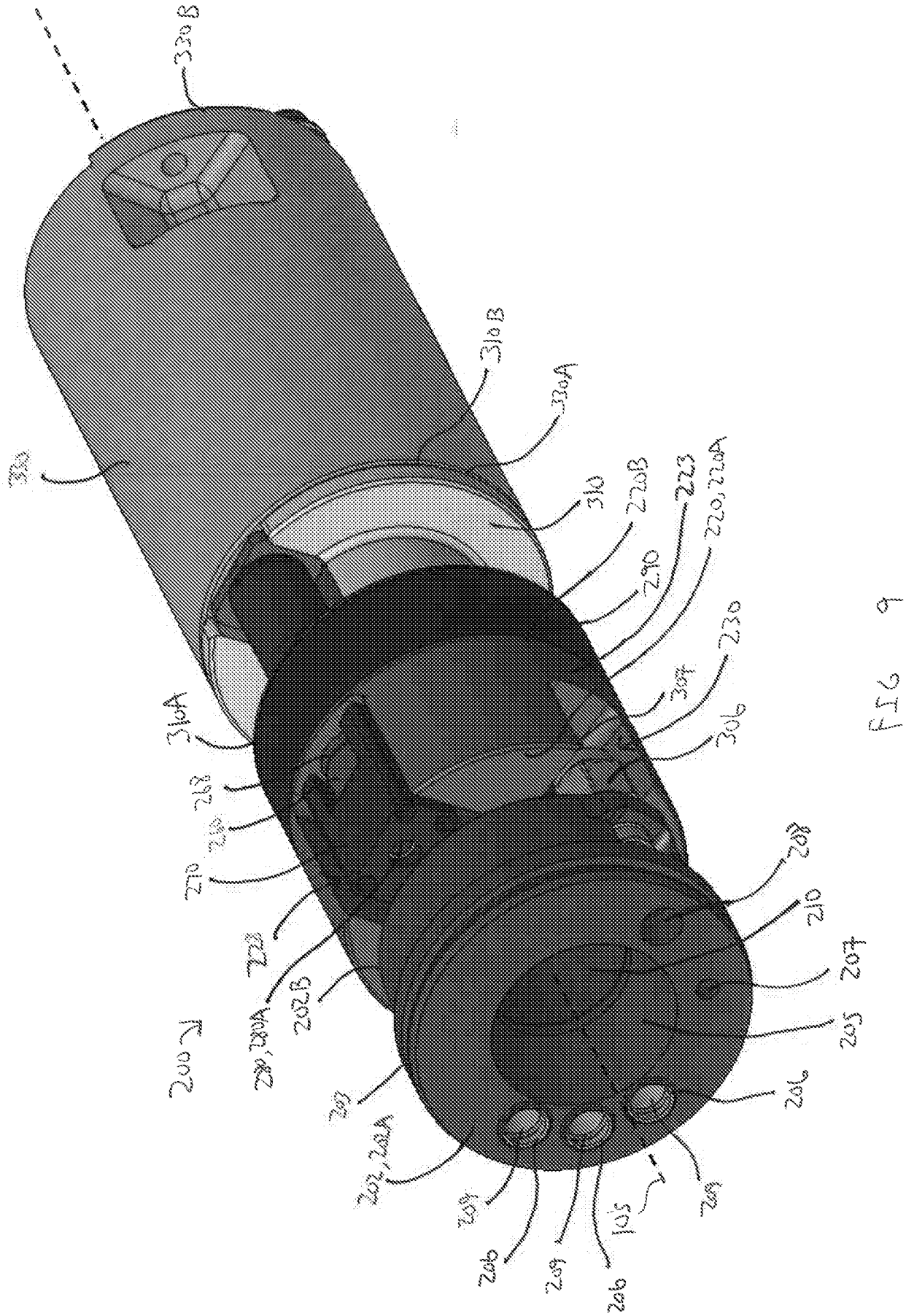
330B
310B
330A
330
310
220B
223
220, 220A
290
230
307
306
310A
268
260
270
228
280, 280A
202B
200
203
202, 202A
204
206
209
206
105
209
206
205
207
210
208

FIG 9

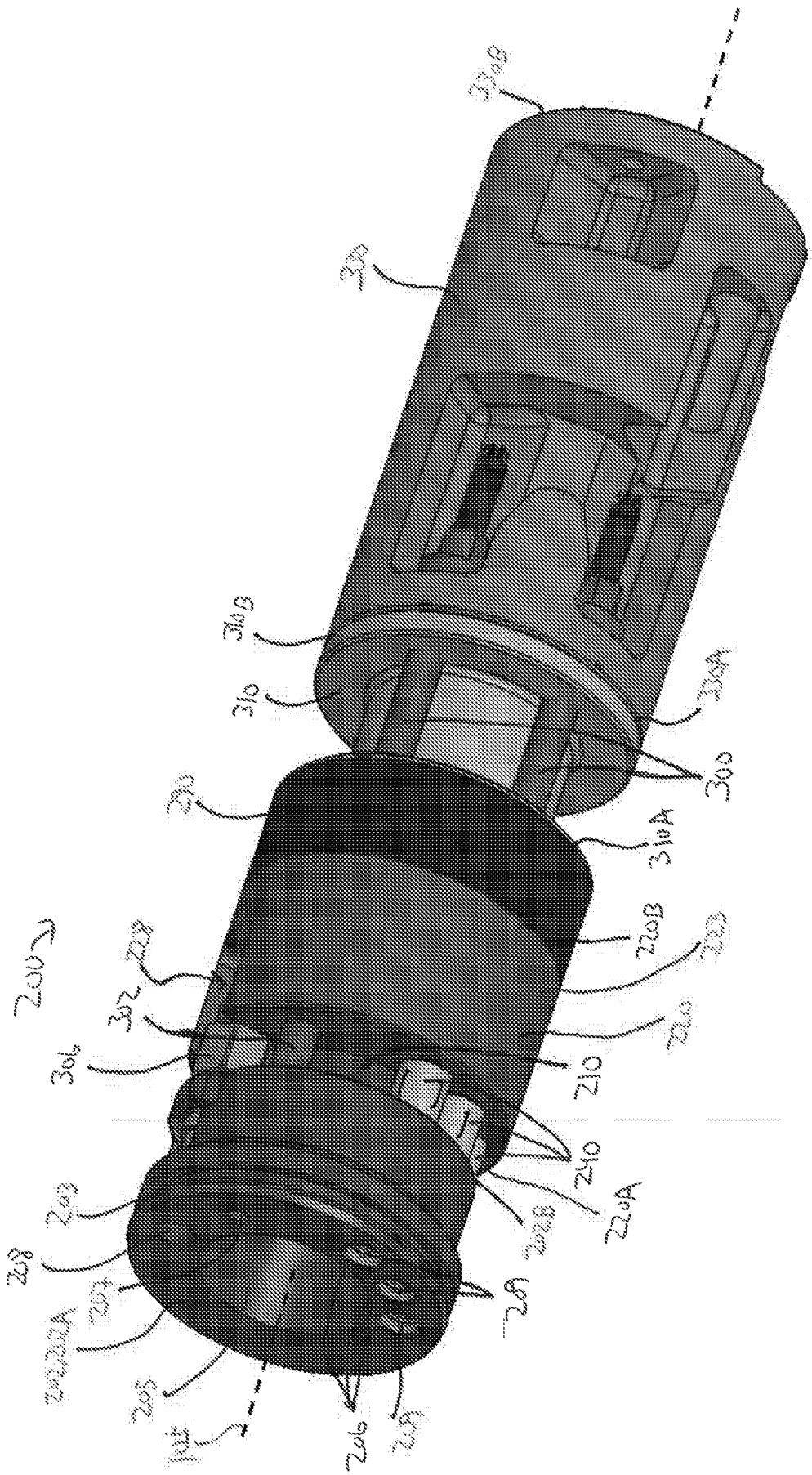
330B
330
310B
310
330A
300
310A
220B
220
210
240
220A
202B
209
206
205
202A
207
208
203
306
302
200

FIG 10

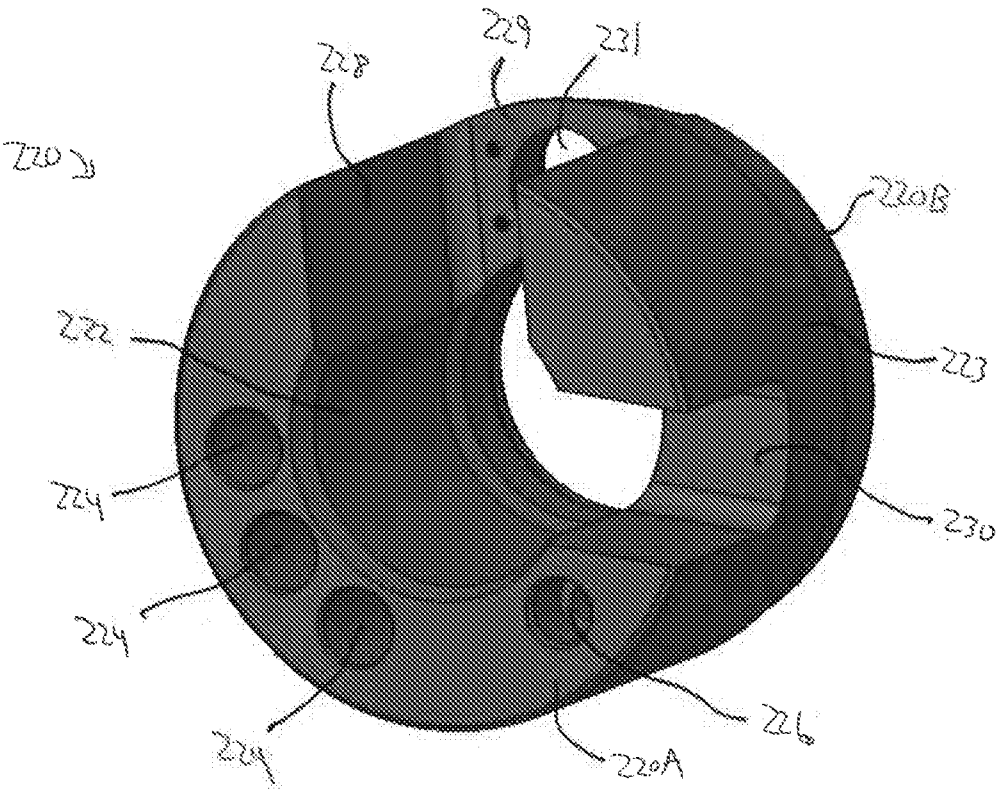
229
231
228
220
220B
222
223
224
230
224
224
226
220A

FIG 11

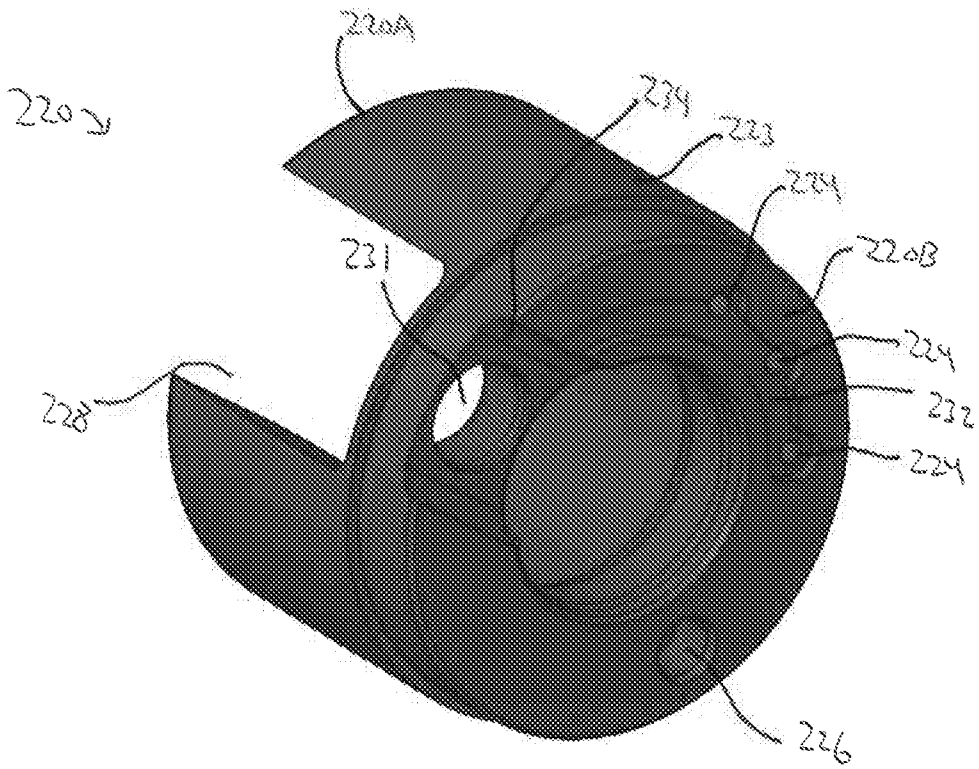
220A
220
229
223
224
220B
231
224
228
232
224
226

FIG 12

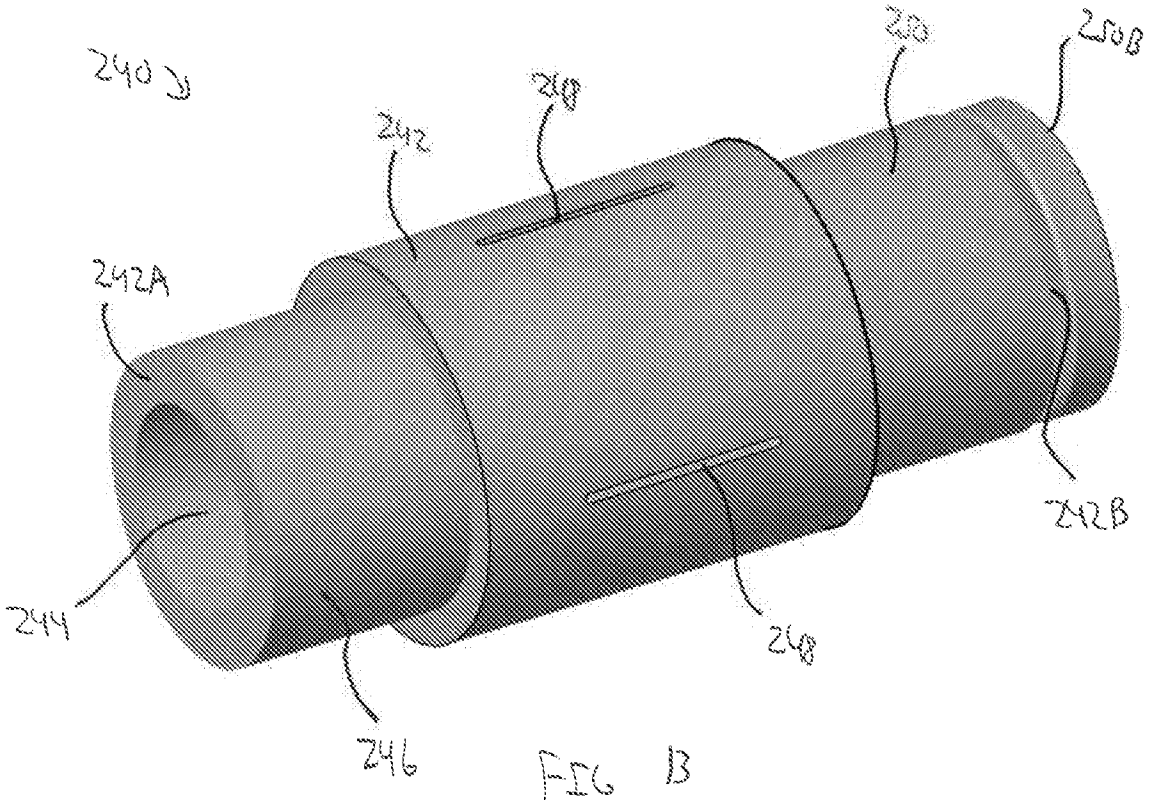
240
242
248
250
250B
242A
242B
244
246
248

FIG 13

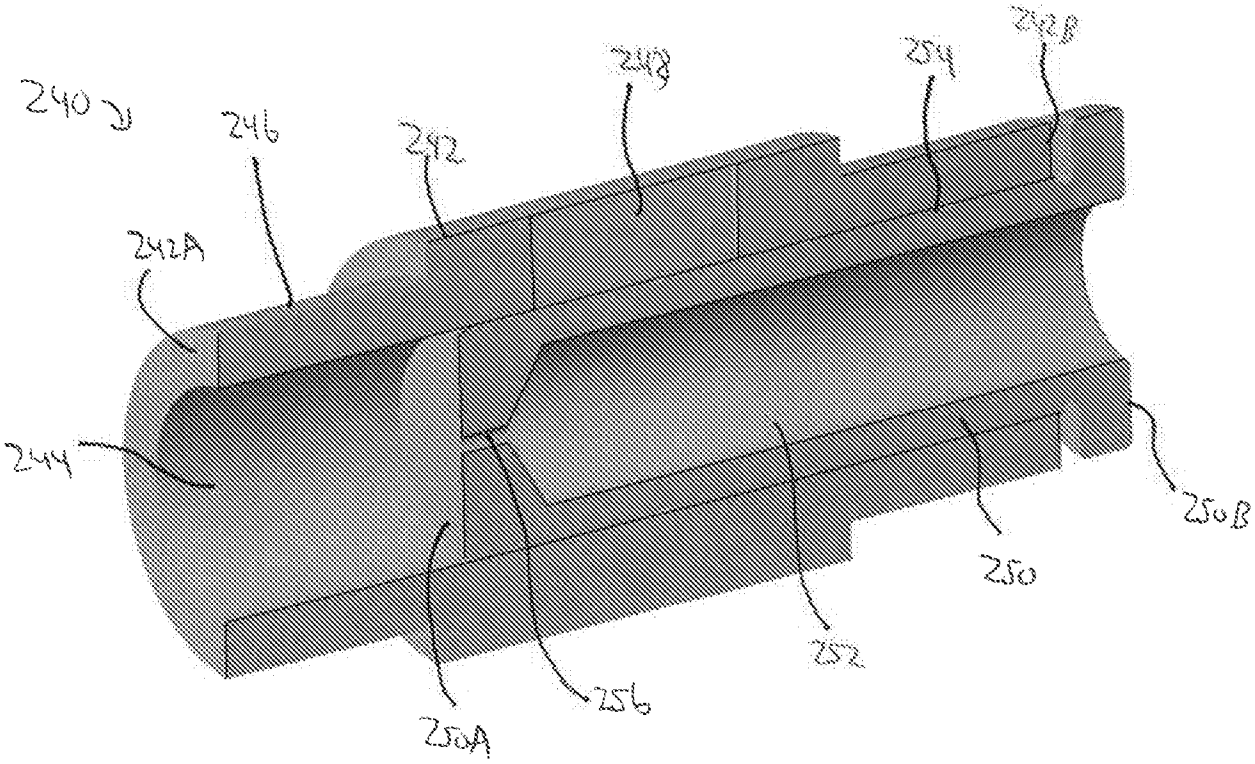
240
246
252
248
254
242B
242A
244
250B
250
252
256
250A

FIG 14

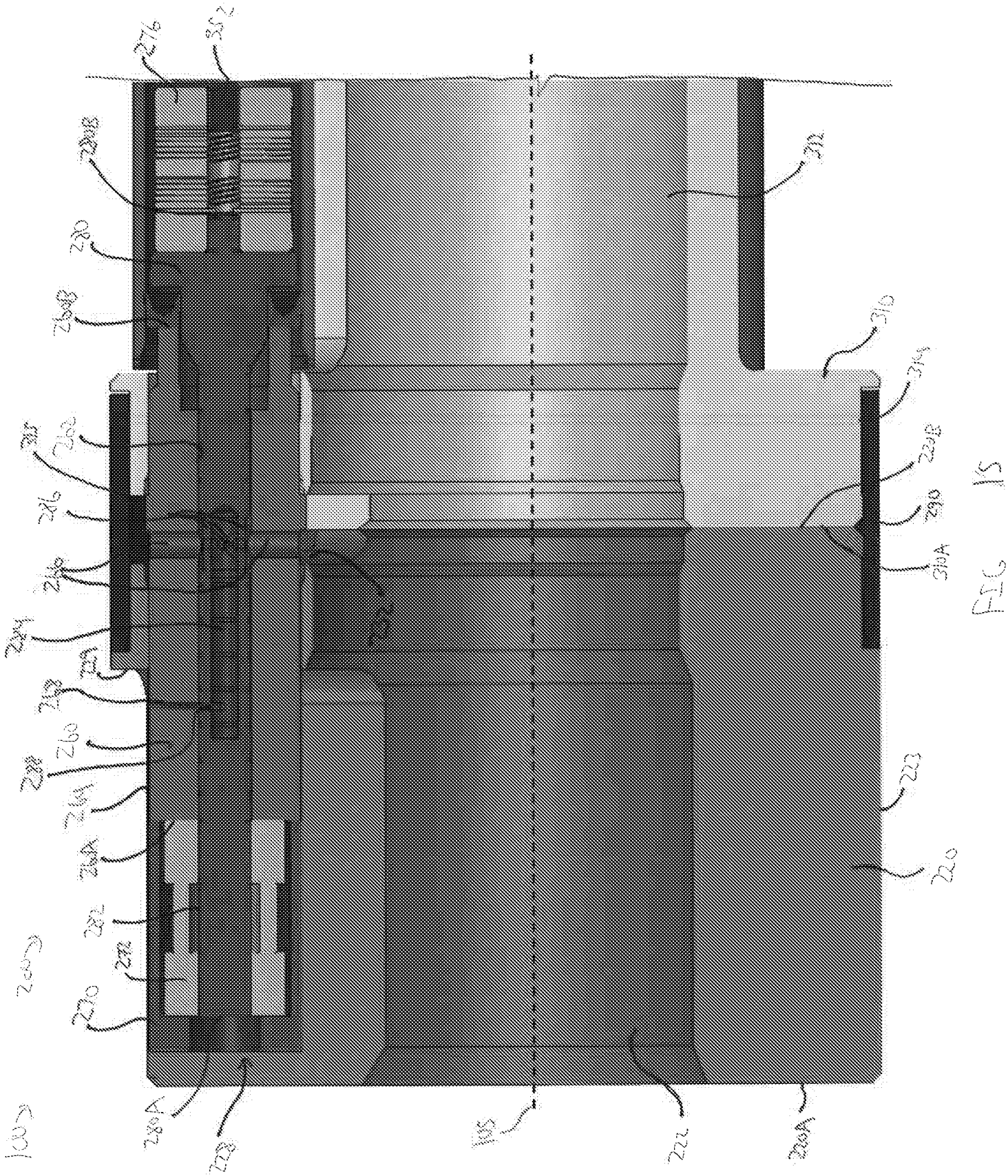
276
352
280B
280
260B
312
310
314
220B
290
310A
315
262
286
286
284
229
268
260
288
264
264A
282
282
270
200
100
280A
228
105
222
220A
223
220

FIG 15

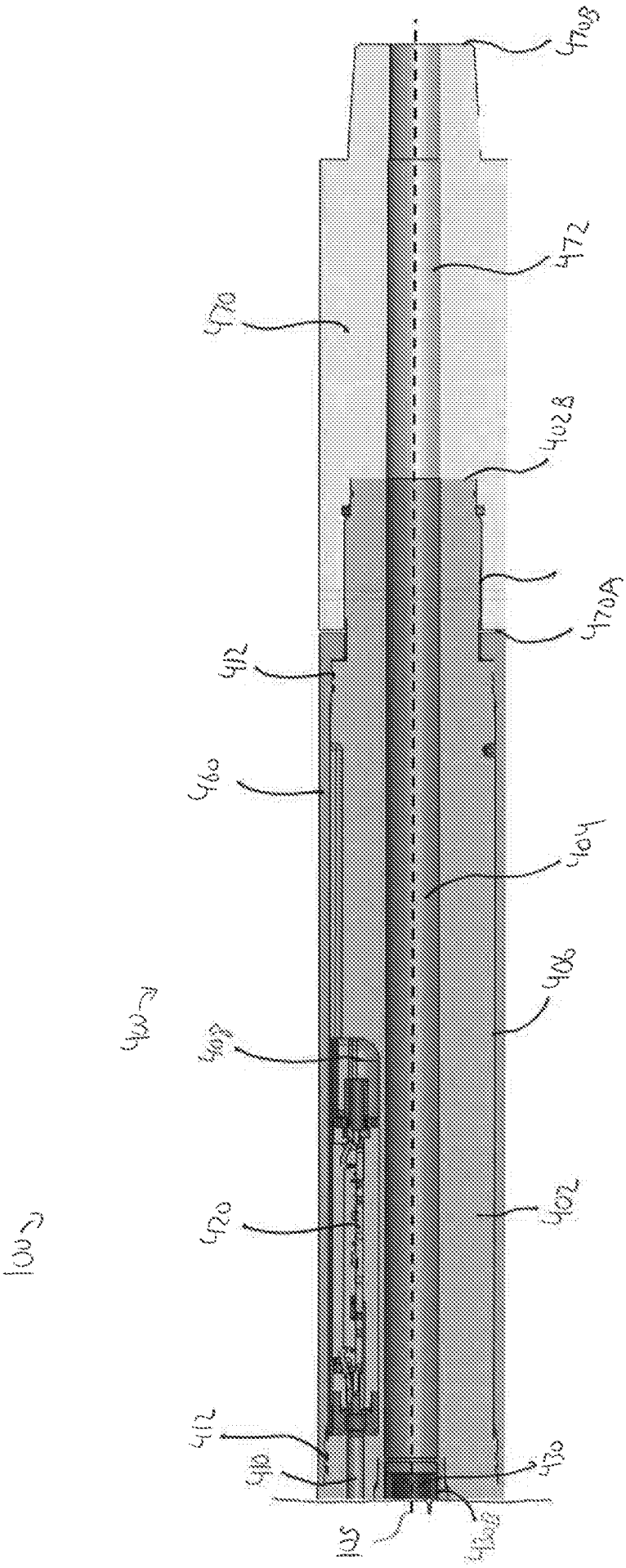
470B
472
470
402B
470A
412
460
404
406
400
408
420
402
100
412
410
430
105
430B

FIG 16

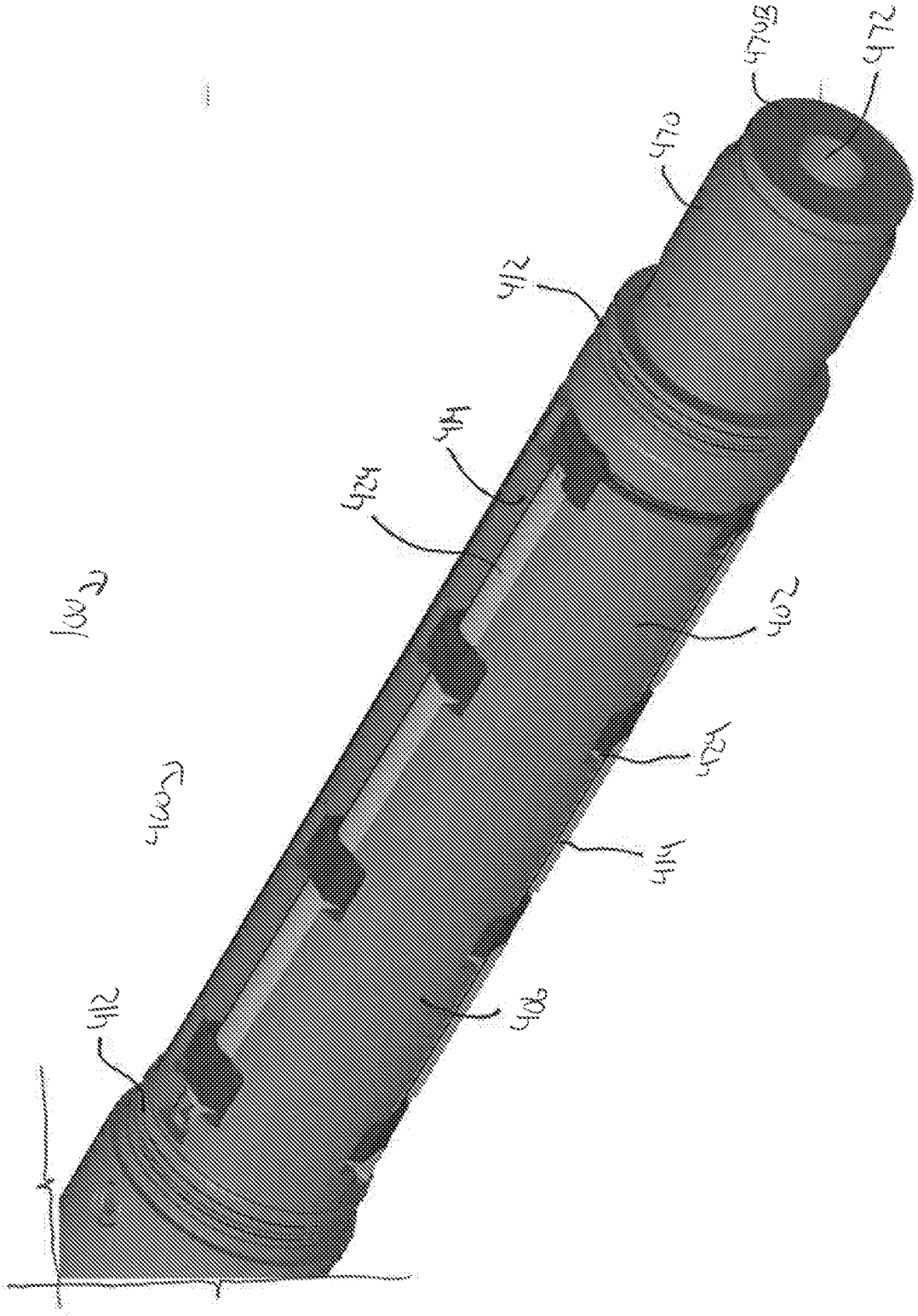

FIG 14

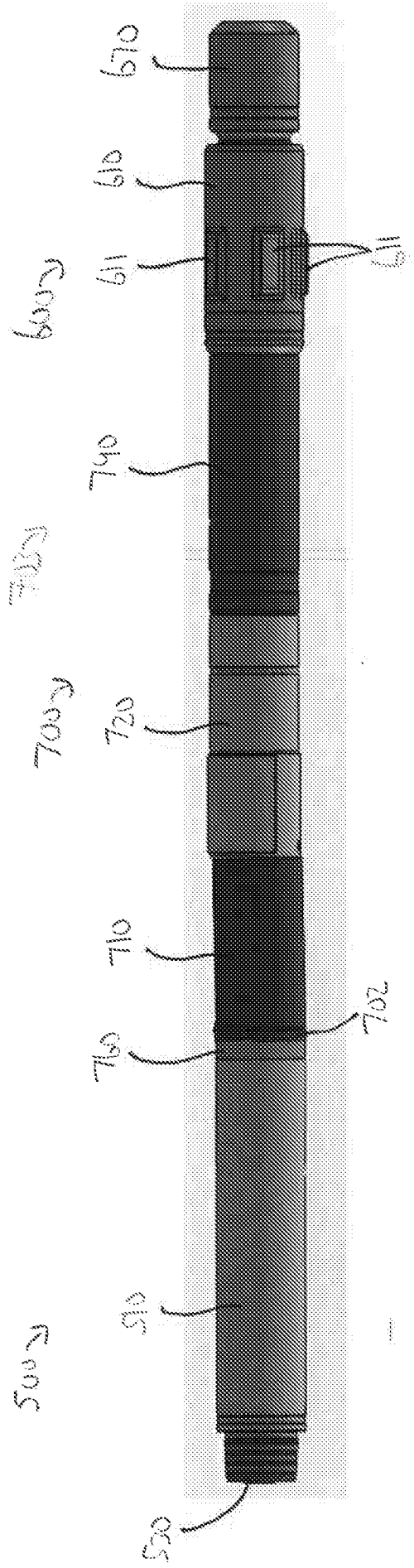

FIG 18

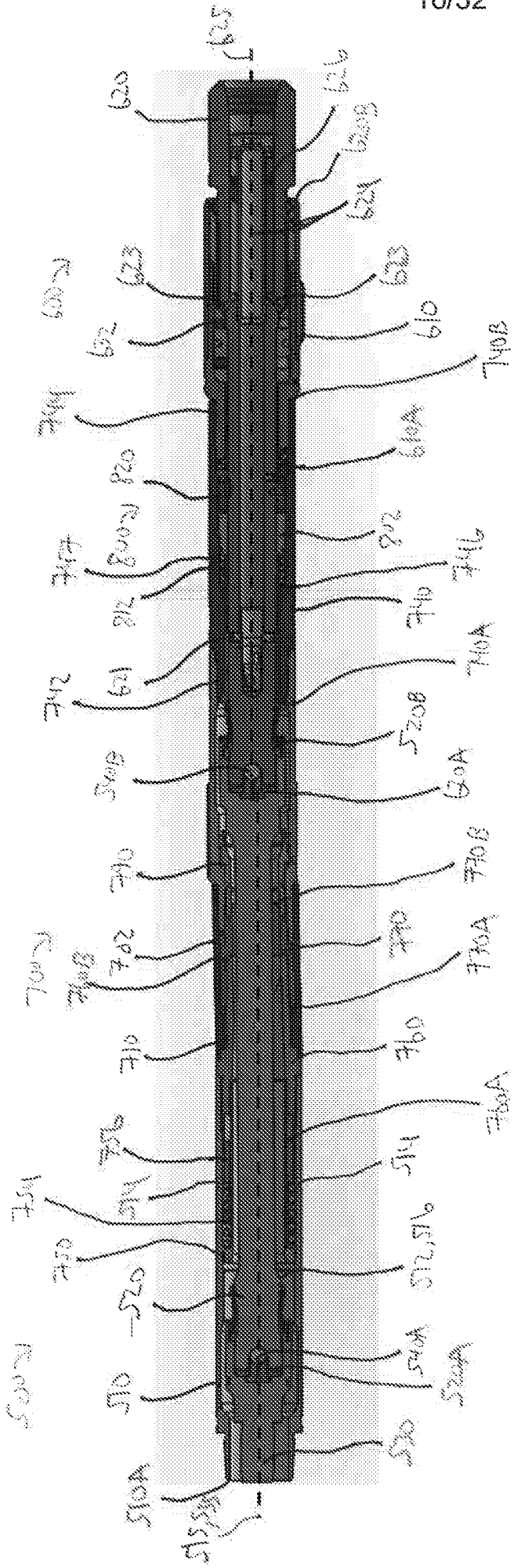

FIG 19

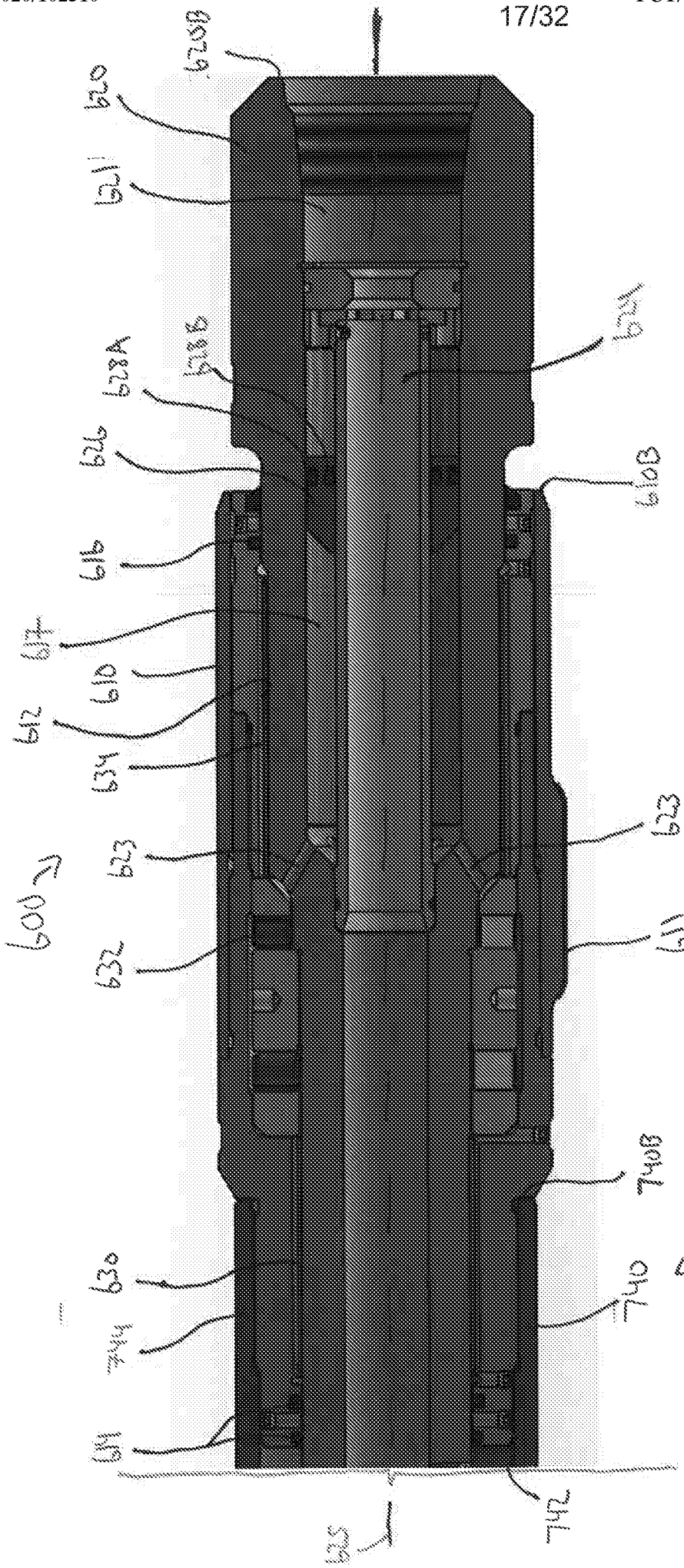
620B
620
621
624
628B
628A
626
610B
616
617
610
612
634
623
623
600
632
611
740B
700
630
740
744
614
742
625

FIG 20

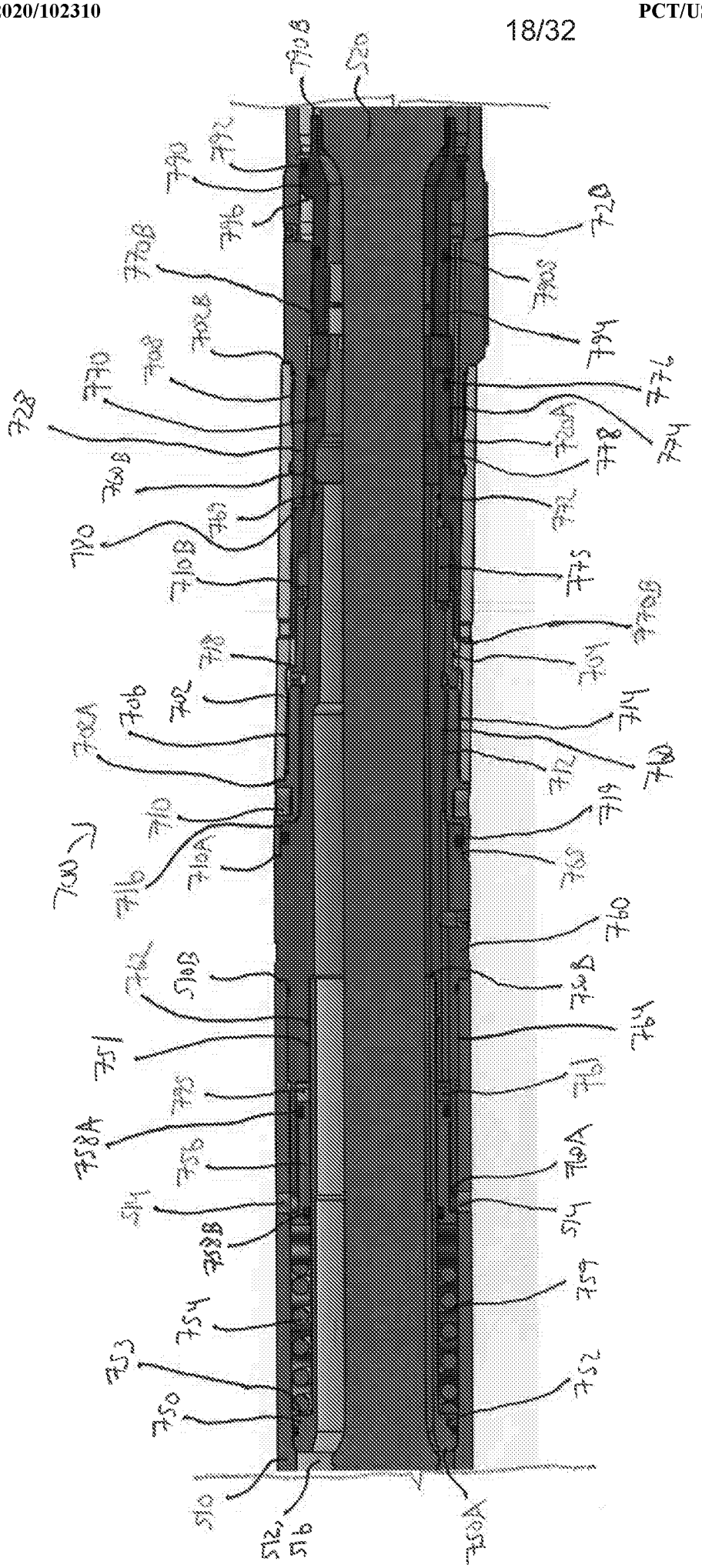

FIG 21

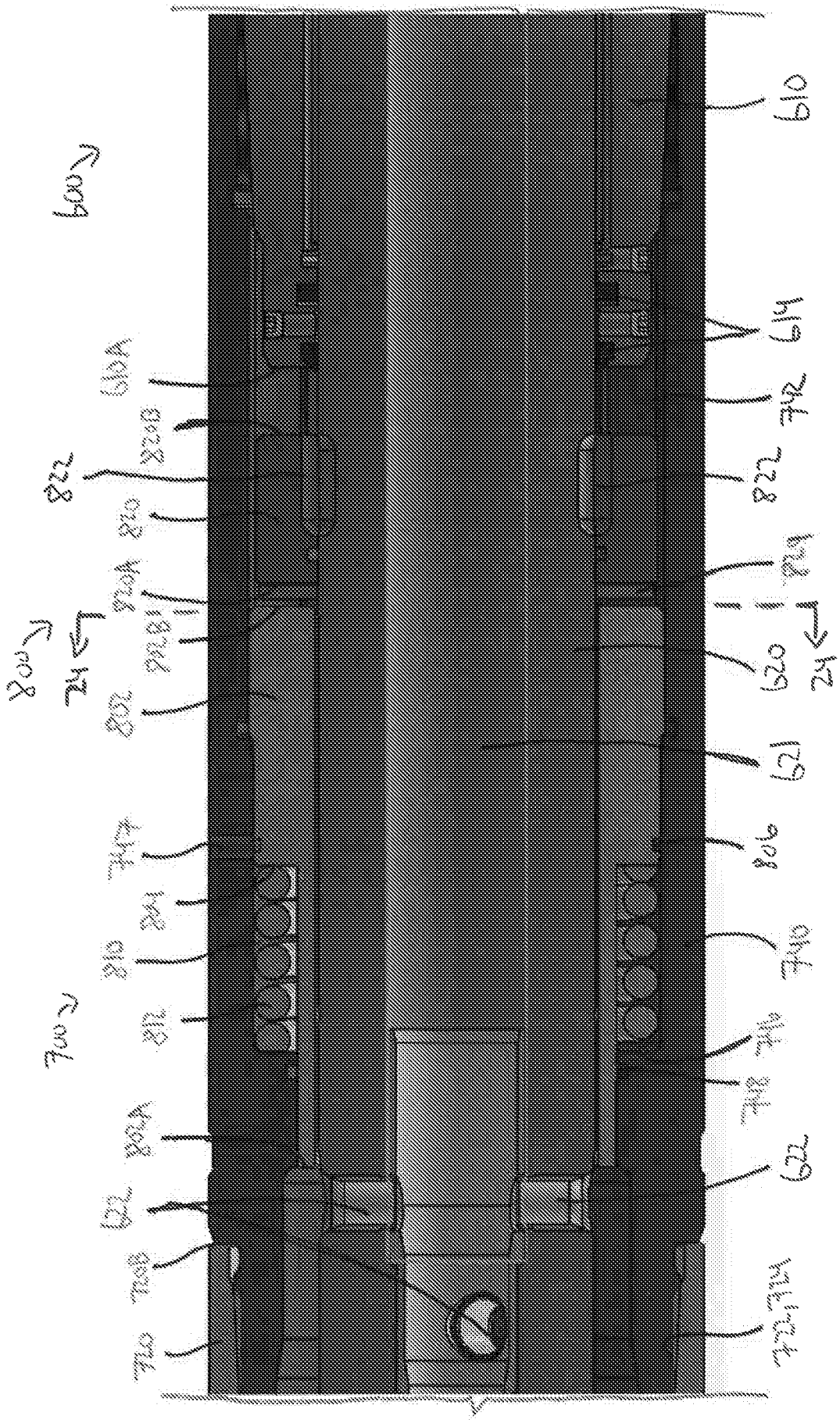
610
614
742
822
820
824A
824B
826
828
802
820
824
810
812
744
744
822
824A
824B
826
828
802
820
824
810
812
744
744
822
824A
824B
826
828
802
820
824
810
812
744
744
822

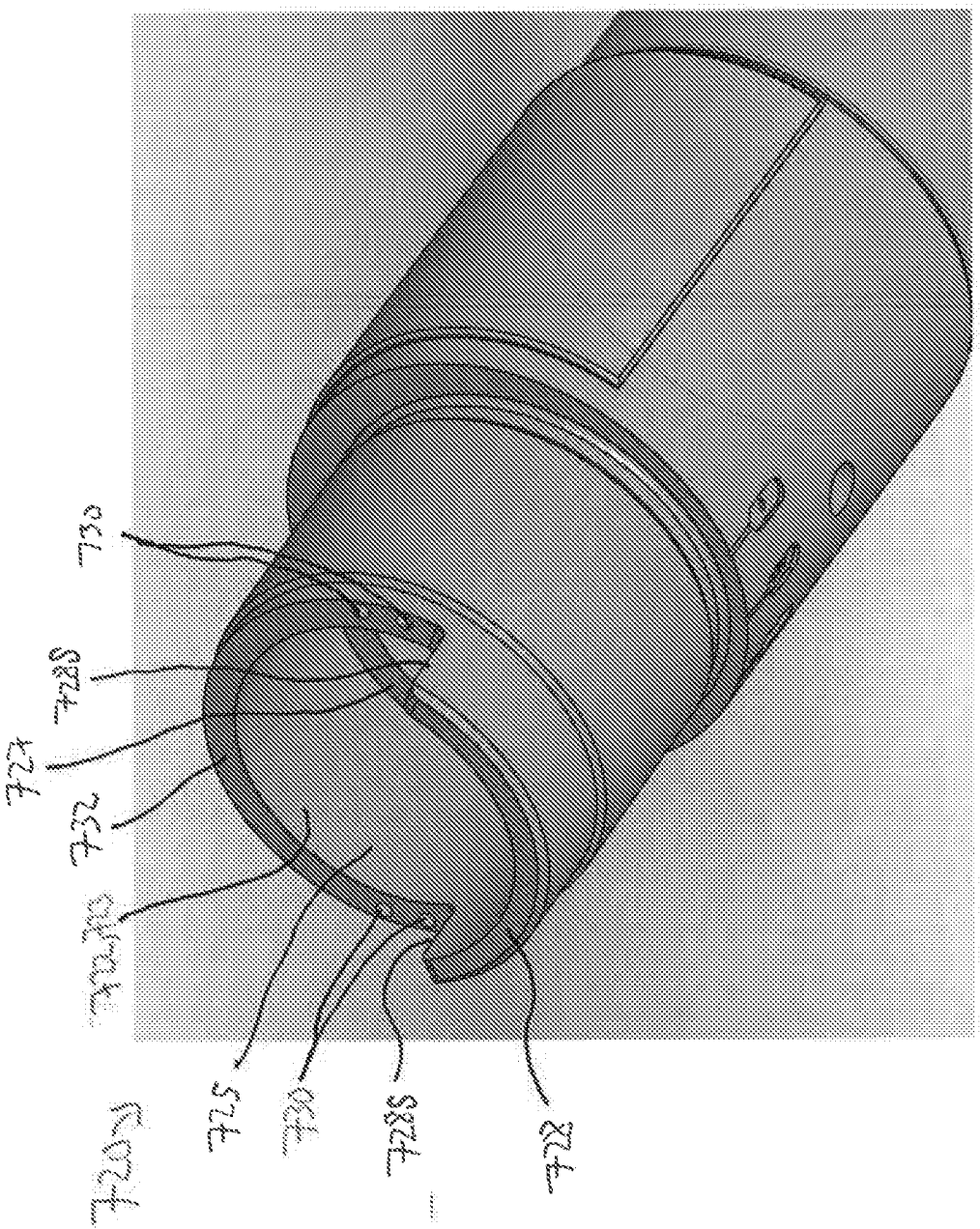

FIG 23

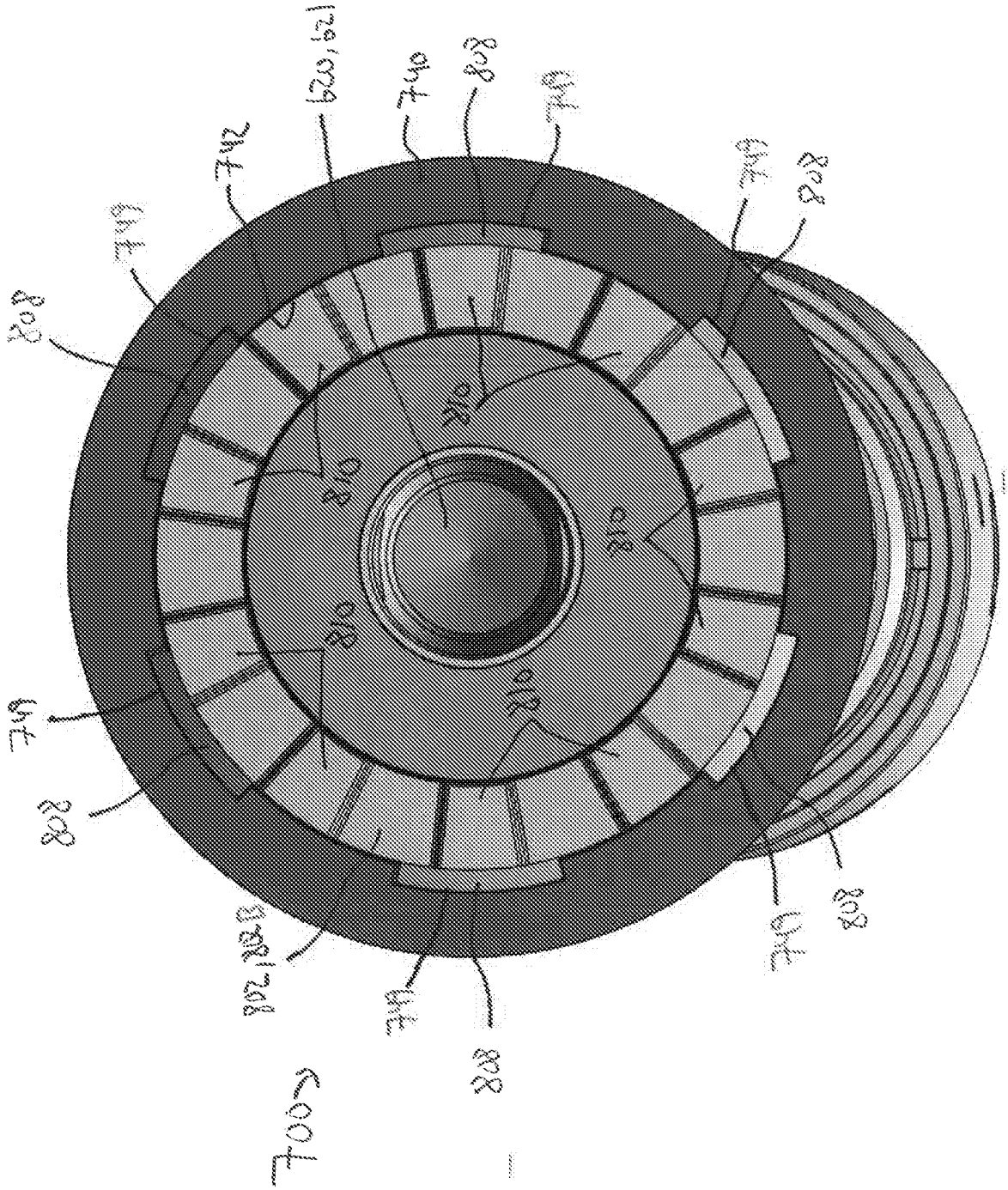
700
702
704
706
708
710
712
714
716
718
720
722
724
726
728
730
732
734
736
738
740
742
744
746
748
750
752
754
756
758
760
762
764
766
768
770
772
774
776
778
780
782
784
786
788
790
792
794
796
798
800
802
804
806
808
810
812
814
816
818
820
822
824
826
828
830
832
834
836
838
840
842
844
846
848
850
852
854
856
858
860
862
864
866
868
870
872
874
876
878
880
882
884
886
888
890
892
894
896
898
900
902
904
906
908
910
912
914
916
918
920
922
924
926
928
930
932
934
936
938
940
942
944
946
948
950
952
954
956
958
960
962
964
966
968
970
972
974
976
978
980
982
984
986
988
990
992
994
996
998
1000
1002
1004
1006
1008
1010
1012
1014
1016
1018
1020
1022
1024
1026
1028
1030
1032
1034
1036
1038
1040
1042
1044
1046
1048
1050
1052
1054
1056
1058
1060
1062
1064
1066
1068
1070
1072
1074
1076
1078
1080
1082
1084
1086
1088
1090
1092
1094
1096
1098
1100
1102
1104
1106
1108
1110
1112
1114
1116
1118
1120
1122
1124
1126
1128
1130
1132
1134
1136
1138
1140
1142
1144
1146
1148
1150
1152
1154
1156
1158
1160
1162
1164
1166
1168
1170
1172
1174
1176
1178
1180
1182
1184
1186
1188
1190
1192
1194
1196
1198
1200
1202
1204
1206
1208
1210
1212
1214
1216
1218
1220
1222
1224
1226
1228
1230
1232
1234
1236
1238
1240
1242
1244
1246
1248
1250
1252
1254
1256
1258
1260
1262
1264
1266
1268
1270
1272
1274
1276
1278
1280
1282
1284
1286
1288
1290
1292
1294
1296
1298
1300
1302
1304
1306
1308
1310
1312
1314
1316
1318
1320
1322
1324
1326
1328
1330
1332
1334
1336
1338
1340
1342
1344
1346
1348
1350
1352
1354
1356
1358
1360
1362
1364
1366
1368
1370
1372
1374
1376
1378
1380
1382
1384
1386
1388
1390
1392
1394
1396
1398
1400
1402
1404
1406
1408
1410
1412
1414
1416
1418
1420
1422
1424
1426
1428
1430
1432
1434
1436
1438
1440
1442
1444
1446
1448
1450
1452
1454
1456
1458
1460
1462
1464
1466
1468
1470
1472
1474
1476
1478
1480
1482
1484
1486
1488
1490
1492
1494
1496
1498
1500
1502
1504
1506
1508
1510
1512
1514
1516
1518
1520
1522
1524
1526
1528
1530
1532
1534
1536
1538
1540
1542
1544
1546
1548
1550
1552
1554
1556
1558
1560
1562
1564
1566
1568
1570
1572
1574
1576
1578
1580
1582
1584
1586
1588
1590
1592
1594
1596
1598
1600
1602
1604
1606
1608
1610
1612
1614
1616
1618
1620
1622
1624
1626
1628
1630
1632
1634
1636
1638
1640
1642
1644
1646
1648
1650
1652
1654
1656
1658
1660
1662
1664
1666
1668
1670
1672
1674
1676
1678
1680
1682
1684
1686
1688
1690
1692
1694
1696
1698
1700
1702
1704
1706
1708
1710
1712
1714
1716
1718
1720
1722
1724
1726
1728
1730
1732
1734
1736
1738
1740
1742
1744
1746
1748
1750
1752
1754
1756
1758
1760
1762
1764
1766
1768
1770
1772
1774
1776
1778
1780
1782
1784
1786
1788
1790
1792
1794
1796
1798
1800
1802
1804
1806
1808
1810
1812
1814
1816
1818
1820
1822
1824
1826
1828
1830
1832
1834
1836
1838
1840
1842
1844
1846
1848
1850
1852
1854
1856
1858
1860
1862
1864
1866
1868
1870
1872
1874
1876
1878
1880
1882
1884
1886
1888
1890
1892
1894
1896
1898
1900
1902
1904
1906
1908
1910
1912
1914
1916
1918
1920
1922
1924
1926
1928
1930
1932
1934
1936
1938
1940
1942
1944
1946
1948
1950
1952
1954
1956
1958
1960
1962
1964
1966
1968
1970
1972
1974
1976
1978
1980
1982
1984
1986
1988
1990
1992
1994
1996
1998
2000
2002
2004
2006
2008
2010
2012
2014
2016
2018
2020
2022
2024
2026
2028
2030
2032
2034
2036
2038
2040
2042
2044
2046
2048
2050
2052
2054
2056
2058
2060
2062
2064
2066
2068
2070
2072
2074
2076
2078
2080
2082
2084
2086
2088
2090
2092
2094
2096
2098
2100
2102
2104
2106
2108
2110
2112
2114
2116
2118
2120
2122
2124
2126
2128
2130
2132
2134
2136
2138
2140
2142
2144
2146
2148
2150
2152
2154
2156
2158
2160
2162
2164
2166
2168
2170
2172
2174
2176
2178
2180
2182
2184
2186
2188
2190
2192
2194
2196
2198
2200
2202
2204
2206
2208
2210
2212
2214
2216
2218
2220
2222
2224
2226
2228
2230
2232
2234
2236
2238
2240
2242
2244
2246
2248
2250
2252
2254
2256
2258
2260
2262
2264
2266
2268
2270
2272
2274
2276
2278
2280
2282
2284
2286
2288
2290
2292
2294
2296
2298
2300
2302
2304
2306
2308
2310
2312
2314
2316
2318
2320
2322
2324
2326
2328
2330
2332
2334
2336
2338
2340
2342
2344
2346
2348
2350
2352
2354
2356
2358
2360
2362
2364
2366
2368
2370
2372
2374
2376
2378
2380
2382
2384
2386
2388
2390
2392
2394
2396
2398
2400
2402
2404
2406
2408
2410
2412
2414
2416
2418
2420
2422
2424
2426
2428
2430
2432
2434
2436
2438
2440
2442
2444
2446
2448
2450
2452
2454
2456
2458
2460
2462
2464
2466
2468
2470
2472
2474
2476
2478
2480
2482
2484
2486
2488
2490
2492
2494
2496
2498
2500
2502
2504
2506
2508
2510
2512
2514
2516
2518
2520
2522
2524
2526
2528
2530
2532
2534
2536
2538
2540
2542
2544
2546
2548
2550
2552
2554
2556
2558
2560
2562
2564
2566
2568
2570
2572
2574
2576
2578
2580
2582
2584
2586
2588
2590
2592
2594
2596
2598
2600
2602
2604
2606
2608
2610
2612
2614
2616
2618
2620
2622
2624
2626
2628
2630
2632
2634
2636
2638
2640
2642
2644
2646
2648
2650
2652
2654
2656
2658
2660
2662
2664
2666
2668
2670
2672
2674
2676
2678
2680
2682
2684
2686
2688
2690
2692
2694
2696
2698
2700
2702
2704
2706
2708
2710
2712
2714
2716
2718
2720
2722
2724
2726
2728
2730
2732
2734
2736
2738
2740
2742
2744
2746
2748
2750
2752
2754
2756
2758
2760
2762
2764
2766
2768
2770
2772
2774
2776
2778
2780
2782
2784
2786
2788
2790
2792
2794
2796
2798
2800
2802
2804
2806
2808
2810
2812
2814
2816
2818
2820
2822
2824
2826
2828
2830
2832
2834
2836
2838
2840
2842
2844
2846
2848
2850
2852
2854
2856
2858
2860
2862
2864
2866
2868
2870
2872
2874
2876
2878
2880
2882
2884
2886
2888
2890
2892
2894
2896
2898
2900
2902
2904
2906
2908
2910
2912
2914
2916
2918
2920
2922
2924
2926
2928
2930
2932
2934
2936
2938
2940
2942
2944
2946
2948
2950
2952
2954
2956
2958
2960
2962
2964
2966
2968
2970
2972
2974
2976
2978
2980
2982
2984
2986
2988
2990
2992
2994
2996
2998
3000
3002
3004
3006
3008
3010
3012
3014
3016
3018
3020
3022
3024
3026
3028
3030
3032
3034
3036
3038
3040
3042
3044
3046
3048
3050
3052
3054
3056
3058
3060
3062
3064
3066
3068
3070
3072
3074
3076
3078
3080
3082
3084
3086
3088
3090
3092
3094
3096
3098
3100
3102
3104
3106
3108
3110
3112
3114
3116
3118
3120
3122
3124
3126
3128
3130
3132
3134
3136
3138
3140
3142
3144
3146
3148
3150
3152
3154
3156
3158
3160
3162
3164
3166
3168
3170
3172
3174
3176
3178
3180
3182
3184
3186
3188
3190
3192
3194
3196
3198
3200
3202
3204
3206
3208
3210
3212
3214
3216
3218
3220
3222
3224
3226
3228
3230
3232
3234
3236
3238
3240
3242
3244
3246
3248
3250
3252
3254
3256
3258
3260
3262
3264
3266
3268
3270
3272
3274
3276
3278
3280
3282
3284
3286
3288
3290
3292
3294
3296
3298
3300
3302
3304
3306
3308
3310
3312
3314
3316
3318
3320
3322
3324
3326
3328
3330
3332
3334
3336
3338
3340
3342
3344
3346
3348
3350
3352
3354
3356
3358
3360
3362
3364
3366
3368
3370
3372
3374
3376
3378
3380
3382
3384
3386
3388
3390
3392
3394
3396
3398
3400
3402
3404
3406
3408
3410
3412
3414
3416
3418
3420
3422
3424
3426
3428
3430
3432
3434
3436
3438
3440
3442
3444
3446
3448
3450
3452
3454
3456
3458
3460
3462
3464
3466
3468
3470
3472
3474
3476
3478
3480
3482
3484
3486
3488
3490
3492
3494
3496
3498
3500
3502
3504
3506
3508
3510
3512
3514
3516
3518
3520
3522
3524
3526
3528
3530
3532
3534
3536
3538
3540
3542
3544
3546
3548
3550
3552
3554
3556
3558
3560
3562
3564
3566
3568
3570
3572
3574
3576
3578
3580
3582
3584
3586
3588
3590
3592
3594
3596
3598
3600
3602
3604
3606
3608
3610
3612
3614
3616
3618
3620
3622
3624
3626
3628
3630
3632
3634
3636
3638
3640
3642
3644
3646
3648
3650
3652
3654
3656
3658
3660
3662
3664
3666
3668
3670
3672
3674
3676
3678
3680
3682
3684
3686
3688
3690
3692
3694
3696
3698
3700
3702
3704
3706
3708
3710
3712
3714
3716
3718
3720
3722
3724
3726
3728
3730
3732
3734
3736
3738
3740
3742
3744
3746
3748
3750
3752
3754
3756
3758
3760
3762
3764
3766
3768
3770
3772
3774
3776
3778
3780
3782
3784
3786
3788
3790
3792
3794
3796
3798
3800
3802
3804
3806
3808
3810
3812
3814
3816
3818
3820
3822
3824
3826
3828
3830
3832
3834
3836
3838
3840
3842
3844
3846
3848
3850
3852
3854
3856
3858
3860
3862
3864
3866
3868
3870
3872
3874
3876
3878
3880
3882
3884
3886
3888
3890
3892
3894
3896
3898
3900
3902
3904
3906
3908
3910
3912
3914
3916
3918
3920
3922
3924
3926
3928
3930
3932
3934
3936
3938
3940
3942
3944
3946
3948
3950
3952
3954
3956
3958
3960
3962
3964
3966
3968
3970
3972
3974
3976
3978
3980
3982
3984
3986
3988
3990
3992
3994
3996
3998
4000
4002
4004
4006
4008
4010
4012
4014
4016
4018
4020
4022
4024
4026
4028
4030
4032
4034
4036
4038
4040
4042
4044
4046
4048
4050
4052
4054
4056
4058
4060
4062
4064
4066
4068
4070
4072
4074
4076
4078
4080
4082
4084
4086
4088
4090
4092
4094
4096
4098
4100
4102
4104
4106
4108
4110
4112
4114
4116
4118
4120
4122
4124
4126
4128
4130
4132
4134
4136
4138
4140
4142
4144
4146
4148
4150
4152
4154
4156
4158
4160
4162
4164
4166
4168
4170
4172
4174
4176
4178
4180
4182
4184
4186
4188
4190
4192
4194
4196
4198
4200
4202
4204
4206
4208
4210
4212
4214
4216
4218
4220
4222
4224
4226
4228
4230
4232
4234
4236
4238
4240
4242
4244
4246
4248
4250
4252
4254
4256
4258
4260
4262
4264
4266
4268
4270
4272
4274
4276
4278
4280
4282
4284
4286
4288
4290
4292
4294
4296
4298
4300
4302
4304
4306
4308
4310
4312
4314
4316
4318
4320
4322
4324
4326
4328
4330
4332
4334
4336
4338
4340
4342
4344
4346
4348
4350
4352
4354
4356
4358
4360
4362
4364
4366
4368
4370
4372
4374
4376
4378
4380
4382
4384
4386
4388
4390
4392
4394
4396
4398
4400
4402
4404
4406
4408
4410
4412
4414
4416
4418
4420
4422
4424
4426
4428
4430
4432
4434
4436
4438
4440
4442
4444
4446
4448
4450
4452
4454
4456
4458
4460
4462
4464
4466
4468
4470
4472
4474
4476
4478
4480
4482
4484
4486
4488
4490
4492
4494
4496
4498
4500
4502
4504
4506
4508
4510
4512
4514
4516
4518
4520
4522
4524
4526
4528
4530
4532
4534
4536
4538
4540
4542
4544
4546
4548
4550
4552
4554
4556
4558
4560
4562
4564
4566
4568
4570
4572
4574
4576
4578
4580
4582
4584
4586
4588
4590
4592
4594
4596
4598
4600
4602
4604
4606
4608
4610
4612
4614
4616
4618
4620
4622
4624
4626
4628
4630
4632
4634
4636
4638
4640
4642
4644
4646
4648
4650
4652
4654
4656
4658
4660
4662
4664
4666
4668
4670
4672
4674
4676
4678
4680
4682
4684
4686
4688
4690
4692
4694
4696
4698
4700
4702
4704
4706
4708
4710
4712
4714
4716
4718
4720
4722
4724
4726
4728
4730
4732
4734
4736
4738
4740
4742
4744
4746
4748
4750
4752
4754
4756
4758
4760
4762
4764
4766
4768
4770
4772
4774
4776
4778
4780
4782
4784
4786
4788
4790
4792
4794
4796
4798
4800
4802
4804
4806
4808
4810
4812
4814
4816
4818
4820
4822
4824
4826
4828
4830
4832
4834
4836
4838
4840
4842
4844
4846
4848
4850
4852
4854
4856
4858
4860
4862
4864
4866
4868
4870
4872
4874
4876
4878
4880
4882
4884
4886
4888
4890
4892
4894
4896
4898
4900
4902
4904
4906
4908
4910
4912
4914
4916
4918
4920
4922
4924
4926
4928
4930
4932
4934
4936
4938
4940
4942
4944
4946
4948
4950
4952
4954
4956
4958
4960
4962
4964
4966
4968
4970
4972
4974
4976
4978
4980
4982
4984
4986
4988
4990
4992
4994
4996
4998
5000
5002
5004
5006
5008
5010
5012
5014
5016
5018
5020
5022
5024
5026
5028
5030
5032
5034
5036
5038
5040
5042
5044
5046
5048
5050
5052
5054
5056
5058
5060
5062
5064
5066
5068
5070
5072
5074
5076
5078
5080
5082
5084
5086
5088
5090
5092
5094
5096
5098
5100
5102
5104
5106
5108
5110
5112
5114
5116
5118
5120
5122
5124
5126
5128
5130
5132
5134
5136
5138
5140
5142
5144
5146
5148
5150
5152
5154
5156
5158
5160
5162
5164
5166
5168
5170
5172
5174
5176
5178
5180
5182
5184
5186
5188
5190
5192
5194
5196
5198
5200
5202
5204
5206
5208
5210
5212
5214
5216
5218
5220
5222
5224
5226
5228
5230
5232
5234
5236
5238
5240
5242
5244
5246
5248
5250
5252
5254
5256
5258
5260
5262
5264
5266
5268
5270
5272
5274
5276
5278
5280
5282
5284
5286
5288
5290
5292
5294
5296
5298
5300
5302
5304
5306
5308
5310
5312
5314
5316
5318
5320
5322
5324
5326
5328
5330
5332
5334
5336
5338
5340
5342
5344
5346
5348
5350
5352
5354
5356
5358
5360
5362
5364
5366
5368
5370
5372
5374
5376
5378
5380
5382
5384
5386
5388
5390
5392
5394
5396
5398
5400
5402
5404
5406
5408
5410
5412
5414
5416
5418
5420
5422
5424
5426
5428
5430
5432
5434
5436
5438
5440
5442
5444
5446
5448
5450
5452
5454
5456
5458
5460
5462
5464
5466
5468
5470
5472
5474
5476
5478
5480
5482
5484
5486
5488
5490
5492
5494
5496
5498
5500
5502
5504
5506
5508
5510
5512
5514
5516
5518
5520
5522
5524
5526
5528
5530
5532
5534
5536
5538
5540
5542
5544
5546
5548
5550
5552
5554
5556
5558
5560
5562
5564
5566
5568
5570
5572
5574
5576
5578
5580
5582
5584
5586
5588
5590
5592
5594
5596
5598
5600
5602
5604
5606
5608
5610
5612
5614
5616
5618
5620
5622
5624
5626
5628
5630
5632
5634
5636
5638
5640
5642
5644
5646
5648
5650
5652
5654
5656
5658
5660
5662
5664
5666
5668
5670
5672
5674
5676
5678
5680
5682
5684
5686
5688
5690
5692
5694
5696
5698
5700
5702
5704
5706
5708
5710
5712
5714
5716
5718
5720
5722
5724
5726
5728
5730
5732
5734
5736
5738
5740
5742
5744
5746
5748
5750
5752
5754
5756
5758
5760
5762
5764
5766
5768
5770
5772
5774
5776
5778
5780
5782
5784
5786
5788
5790
5792
5794
5796
5798
5800
5802
5804
5806
5808
5810
5812
5814
5816
5818
5820
5822
5824
5826
5828
5830
5832
5834
5836
5838
5840
5842
5844
5846
5848
5850
5852
5854
5856
5858
5860
5862
5864
5866
5868
5870
5872
5874
5876
5878
5880
5882
5884
5886
5888
5890
5892
5894
5896
5898
5900
5902
5904
5906
5908
5910
5912
5914
5916
5918
5920
5922
5924
5926
5928
5930
5932
5934
5936
5938
5940
5942
5944
5946
5948
5950
5952
5954
5956
5958
5960
5962
5964
5966
5968
5970
5972
5974
5976
5978
5980
5982
5984
5986
5988
5990
5992
5994
5996
5998
6000
6002
6004
6006
6008
6010
6012
6014
6016
6018
6020
6022
6024
6026
6028
6030
6032
6034
6036
6038
6040
6042
6044
6046
6048
6050
6052
6054
6056
6058
6060
6062
6064
6066
6068
6070
6072
6074
6076
6078
6080
6082
6084
6086
6088
6090
6092
6094
6096
6098
6100
6102
6104
6106
6108
6110
6112
6114
6116
6118
6120
6122
6124
6126
6128
6130
6132
6134
6136
6138
6140
6142
6144
6146
6148
6150
6152
6154
6156
6158
6160
6162
6164
6166
6168
6170
6172
6174
6176
6178
6180
6182
6184
6186
6188
6190
6192
6194
6196
6198
6200
6202
6204
6206
6208
6210
6212
6214
6216
6218
6220
6222
6224
6226
6228
6230
6232
6234
6236
6238
6240
6242
6244
6246
6248
6250
6252
6254
6256
6258
6260
6262
6264
6266
6268
6270
6272
6274
6276
6278
6280
6282
6284
6286
6288
6290
6292
6294
6296
6298
6300
6302
6304
6306
6308
6310
6312
6314
6316
6318
6320
6322
6324
6326
6328
6330
6332
6334
6336
6338
6340
6342
6344
6346
6348
6350
6352
6354
6356
6358
6360
6362
6364
6366
6368
6370
6372
6374
6376
6378
6380
6382
6384
6386
6388
6390
6392
6394
6396
6398
6400
6402
6404
6406
6408
6410
6412
6414
6416
6418
6420
6422
6424
6426
6428
6430
6432
6434
6436
6438
6440
6442
6444
6446
6448
6450
6452
6454
6456
6458
6460
6462
6464
6466
6468
6470
6472
6474
6476
6478
6480
6482
6484
6486
6488
6490
6492
6494
6496
6498
6500
6502
6504
6506
6508
6510
6512
6514
6516
6518
6520
6522
6524
6526
6528
6530
6532
6534
6536
6538
6540
6542
6544
6546
6548
6550
6552
6554
6556
6558
6560
6562
6564
6566
6568
6570
6572
6574
6576
6578
6580
6582
6584
6586
6588
6590
6592
6594
6596
6598
6600
6602
6604
6606
6608
6610
6612
6614
6616
6618
6620
6622
6624
6626
6628
6630
6632
6634
6636
6638
6640
6642
6644
6646
6648
6650
6652
6654
6656
6658
6660
6662
6664
6666
6668
6670
6672
6674
6676
6678
6680
6682
6684
6686
6688
6690
6692
6694
6696
6698
6700
6702
6704
6706
6708
6710
6712
6714
6716
6718
6720
6722
6724
6726
6728
6730
6732
6734
6736
6738
6740
6742
6744
6746
6748
6750
6752
6754
6756
6758
6760
6762
6764
6766
6768
6770
6772
6774
6776
6778
6780
6782
6784
6786
6788
6790
6792
6794
6796
6798
6800
6802
6804
6806
6808
6810
6812
6814
6816
6818
6820
6822
6824
6826
6828
6830
6832
6834
6836
6838
6840
6842
6844
6846
6848
6850
6852
6854
6856
6858
6860
6862
6864
6866
6868
6870
6872
6874
6876
6878
6880
6882
6884
6886
6888
6890
6892
6894
6896
6898
6900
6902
6904
6906
6908
6910
6912
6914
6916
6918
6920
6922
6924
6926
6928
6930
6932
6934
6936
6938
6940
6942
6944
6946
6948
6950
6952
6954
6956
6958
6960
6962
6964
6966
6968
6970
6972
6974
6976
6978
6980
6982
6984
6986
6988
6990
6992
6994
6996
6998
7000
7002
7004
7006
7008
7010
7012
7014
7016
7018
7020
7022
7024
7026
7028
7030
7032
7034
7036
7038
7040
7042
7044
7046
7048
7050
7052
7054
7056
7058
7060
7062
7064
7066
7068
7070
7072
7074
7076
7078
7080
7082
7084
7086
7088
7090
7092
7094
7096
7098
7100
7102
7104
7106
7108
7110
7112
7114
7116
7118
7120
7122
7124
7126
7128
7130
7132
7134
7136
7138
7140
7142
7144
7146
7148
7150
7152
7154
7156
7158
7160
7162
7164
7166
7168
7170
7172
7174
7176
7178
7180
7182
7184
7186
7188
7190
7192
7194
7196
7198
7200
7202
7204
7206
7208
7210
7212
7214
7216
7218
7220
7222
7224
7226
7228
7230
7232
7234
7236
7238
7240
7242
7244
7246
7248
7250
7252
7254
7256
7258
7260
7262
7264
7266
7268
7270
7272
7274
7276
7278
7280
7282
7284
7286
7288
7290
7292
7294
7296
7298
7300
7302
7304
7306
7308
7310
7312
7314
7316
7318
7320
7322
7324
7326
7328
7330
7332
7334
7336
7338
7340
7342
7344
7346
7348
7350
7352
7354
7356
7358
7360
7362
7364
7366
7368
7370
7372
7374
7376
7378
7380
7382
7384
7386
7388
7390
7392
7394
7396
7398
7400
7402
7404
7406
7408
7410
7412
7414
7416
7418
7420
7422
7424
7426
7428
7430
7432
7434
7436
7438
7440
7442
7444
7446
7448
7450
7452
7454
7456
7458
7460
7462
7464
7466
7468
7470
7472
7474
7476
7478
7480
7482
7484
7486
7488
7490
7492
7494
7496
7498
7500
7502
7504
7506
7508
7510
7512
7514
7516
7518
7520
7522
7524
7526
7528
7530
7532
7534
7536
7538
7540
7542
7544
7546
7548
7550
7552
7554
7556
7558
7560
7562
7564
7566
7568
7570
7572
7574
7576
7578
7580
7582
7584
7586
7588
7590
7592
7594
7596
7598
7600
7602
7604
7606
7608
7610
7612
7614
7616
7618
7620
7622
7624
7626
7628
7630
7632
7634
7636
7638
7640
7642
7644
7646
7648
7650
7652
7654
7656
7658
7660
7662
7664
7666
7668
7670
7672
7674
7676
7678
7680
7682
7684
7686
7688
7690
7692
7694
7696
7698
7700
7702
7704
7706
7708
7710
7712
7714
7716
7718
7720
7722
7724
7726
7728
7730
7732
7734
7736
7738
7740
7742
7744
7746
7748
7750
7752
7754
7756
7758
7760
7762
7764
7766
7768
7770
7772
7774
7776
7778
7780
7782
7784
7786
7788
7790
7792
7794
7796
7798
7800
7802
7804
7806
7808
7810
7812
7814
7816
7818
7820
7822
7824
7826
7828
7830
7832
7834
7836
7838
7840
7842
7844
7846
7848
7850
7852
7854
7856
7858
7860
7862
7864
7866
7868
7870
7872
7874
7876
7878
7880
7882
7884
7886
7888
7890
7892
7894
7896
7898
7900
7902
7904
7906
7908
7910
7912
7914
7916
7918
7920
7922
7924
7926
7928
7930
7932
7934
7936
7938
7940
7942
7944
7946
7948
7950
7952
7954
7956
7958
7960
7962
7964
7966
7968
7970
7972
7974
7976
7978
7980
7982
7984
7986
7988
7990
7992
7994
7996
7998
8000
8002
8004
8006
8008
8010
8012
8014
8016
8018
8020
8022
8024
8026
8028
8030
8032
8034
8036
8038
8040
8042
8044
8046
8048
8050
8052
8054
8056
8058
8060
8062
8064
8066
8068
8070
8072
8074
8076
8078
8080
8082
8084
8086
8088
8090
8092
8094
8096
8098
8100
8102
8104
8106
8108
8110
8112
8114
8116
8118
8120
8122
8124
8126
8128
8130
8132
8134
8136
8138
8140
8142
8144
8146
8148
8150
8152
8154
8156
8158
8160
8162
8164
8166
8168
8170
8172
8174
8176
8178
8180
8182
8184
8186
8188
8190
8192
8194
8196
8198
8200
8202
8204
8206
8208
8210
8212
8214
8216
8218
8220
8222
8224
8226
8228
8230
8232
8234
8236
8238
8240
8242
8244
8246
8248
8250
8252
8254
8256
8258
8260
8262
8264
8266
8268
8270
8272
8274
8276
8278
8280
8282
8284
8286
8288
8290
8292
8294
8296
8298
8300
8302
8304
8306
8308
8310
8312
8314
8316
8318
8320
8322
8324
8326
8328
8330
8332
8334
8336
8338
8340
8342
8344
8346
8348
8350
8352
8354
8356
8358
8360
8362
8364
8366
8368
8370
8372
8374
8376
8378
8380
8382
8384
8386
8388
8390
8392
8394
8396
8398
8400
8402
8404
8406
8408
8410
8412
8414
8416
8418
8420
8422
8424
8426
8428
8430
8432
8434
8436
8438
8440
8442
8444
8446
8448
8450
8452
8454
8456
8458
8460
8462
8464
8466
8468
8470
8472
8474
8476
8478
8480
8482
8484
8486
8488
8490
8492
8494
8496
8498
8500
8502
8504
8506
8508
8510
8512
8514
8516
8518
8520
8522
8524
8526
8528
8530
8532
8534
8536
8538
8540
8542
8544
8546
8548
8550
8552
8554
8556
8558
8560
8562
8564
8566
8568
8570
8572
8574
8576
8578
8580
8582
8584
8586
8588
8590
8592
8594
8596
8598
8600
8602
8604
8606
8608
8610
8612
8614
8616
8618
8620
8622
8624
8626
8628
8630
8632
8634
8636
8638
8640
8642
8644
8646
8648
8650
8652
8654
8656
8658
8660
8662
8664
8666
8668
8670
8672
8674
8676
8678
8680
8682
8684
8686
8688
8690
8692
8694
8696
8698
8700
8702
8704
8706
8708
8710
8712
8714
8716
8718
8720
8722
8724
8726
8728
8730
8732
8734
8736
8738
8740
8742
8744
8746
8748
8750
8752
8754
8756
8758
8760
8762
8764
8766
8768
8770
8772
8774
8776
8778
8780
8782
8784
8786
8788
8790
8792
8794
8796
8798
8800
8802
8804
8806
8808
8810
8812
8814
8816
8818
8820
8822
8824
8826
8828
8830
8832
8834
8836
8838
8840
8842
8844
8846
8848
8850
8852
8854
8856
8858
8860
8862
8864
8866
8868
8870
8872
8874
8876
8878
8880
8882
8884
8886
8888
8890
8892
8894
8896
8898
8900
8902
8904
8906
8908
8910
8912
8914
8916
8918
8920
8922
8924
8926
8928
8930
8932
8934
8936
8938
8940
8942
8944
8946
8948
8950
8952
8954
8956
8958
8960
8962
8964
8966
8968
8970
8972
8974
8976
8978
8980
8982
8984
8986
8988
8990
8992
8994
8996
8998
9000
9002
9004
9006
9008
9010
9012
9014
9016
9018
9020
9022
9024
9026
9028
9030
9032
9034
9036
9038
9040
9042
9044
9046
9048
9050
9052
9054
9056
9058
9060
9062
9064
9066
9068
9070
9072
9074
9076
9078
9080
9082
9084
9086
9088
9090
9092
9094
9096
9098
9100
9102
9104
9106
9108
9110
9112
9114
9116
9118
9120
9122
9124
9126
9128
9130
9132
9134
9136
9138
9140
9142
9144
9146
9148
9150
9152
9154
9156
9158
9160
9162
9164
9166
9168
9170
9172
9174
9176
9178
9180
9182
9184
9186
9188
9190
9192
9194
9196
9198
9200
9202
9204
9206
9208
9210
9212
9214
9216
9218
9220
9222
9224
9226
9228
9230
9232
9234
9236
9238
9240
9242
9244
9246
9248
9250
9252
9254
9256
9258
9260
9262
9264
9266
9268
9270
9272
9274
9276
9278
9280
9282
9284
9286
9288
9290
9292
9294
9296
9298
9300
9302
9304
9306
9308
9310
9312
9314
9316
9318
9320
9322
9324
9326
9328
9330
9332
9334
9336
9338
9340
9342
9344
9346
9348
9350
9352
9354
9356
9358
9360
9362
9364
9366
9368
9370
9372
9374
9376
9378
9380
9382
9384
9386
9388
9390
9392
9394
9396
9398
9400
9402
9404
9406
9408
9410
9412
9414
9416
9418
9420
9422
9424
9426
9428
9430
9432
9434
9436
9438
9440
9442
9444
9446
9448
9450
9452
9454
9456
9458
9460
9462
9464
9466
9468
9470
9472
9474
9476
9478
9480
9482
9484
9486
9488
9490
9492
9494
9496
9498
9500
9502
9504
9506
9508
9510
9512
9514
9516
9518
9520
9522
9524
9526
9528
9530
9532
9534
9536
9538
9540
9542
9544
9546
9548
9550
9552
9554
9556
9558
9560
9562
9564
9566
9568
9570
9572
9574
9576
9578
9580
9582
9584
9586
9588
9590
9592
9594
9596
9598
9600
9602
9604
9606
9608
9610
9612
9614
9616
9618
9620
9622
9624
9626
9628
9630
9632
9634
9636
9638
9640
9642
9644
9646
9648
9650
9652
9654
9656
9658
9660
9662
9664
9666
9668
9670
9672
9674
9676
9678
9680
9682
9684
9686
9688
9690
9692
9694
9696
9698
9700
9702
9704
9706
9708
9710
9712
9714
9716
9718
9720
9722
9724
9726
9728
9730
9732
9734
9736
9738
9740
9742
9744
9746
9748
9750
9752
9754
9756
9758
9760
9762
9764
9766
9768
9770
9772
9774
9776
9778
9780
9782
9784
9786
9788
9790
9792
9794
9796
9798
9800
9802
9804
9806
9808
9810
9812
9814
9816
9818
9820
9822
9824
9826
9828
9830
9832
9834
9836
9838
9840
9842
9844
9846
9848
9850
9852
9854
9856
9858
9860
9862
9864
9866
9868
9870
9872
9874
9876
9878
9880
9882
9884
9886
9888
9890
9892
9894
9896
9898
9900
9902
9904
9906
9908
9910
9912
9914
9916
9918
9920
9922
9924
9926
9928
9930
9932
9934
9936
9938
9940
9942
9944
9946
9948
9950
9952
9954
9956
9958
9960
9962
9964
9966
9968
9970
9972
9974
9976
9978
9980
9982
9984
9986
9988
9990
9992
9994
9996
9998
10000

FIG 24

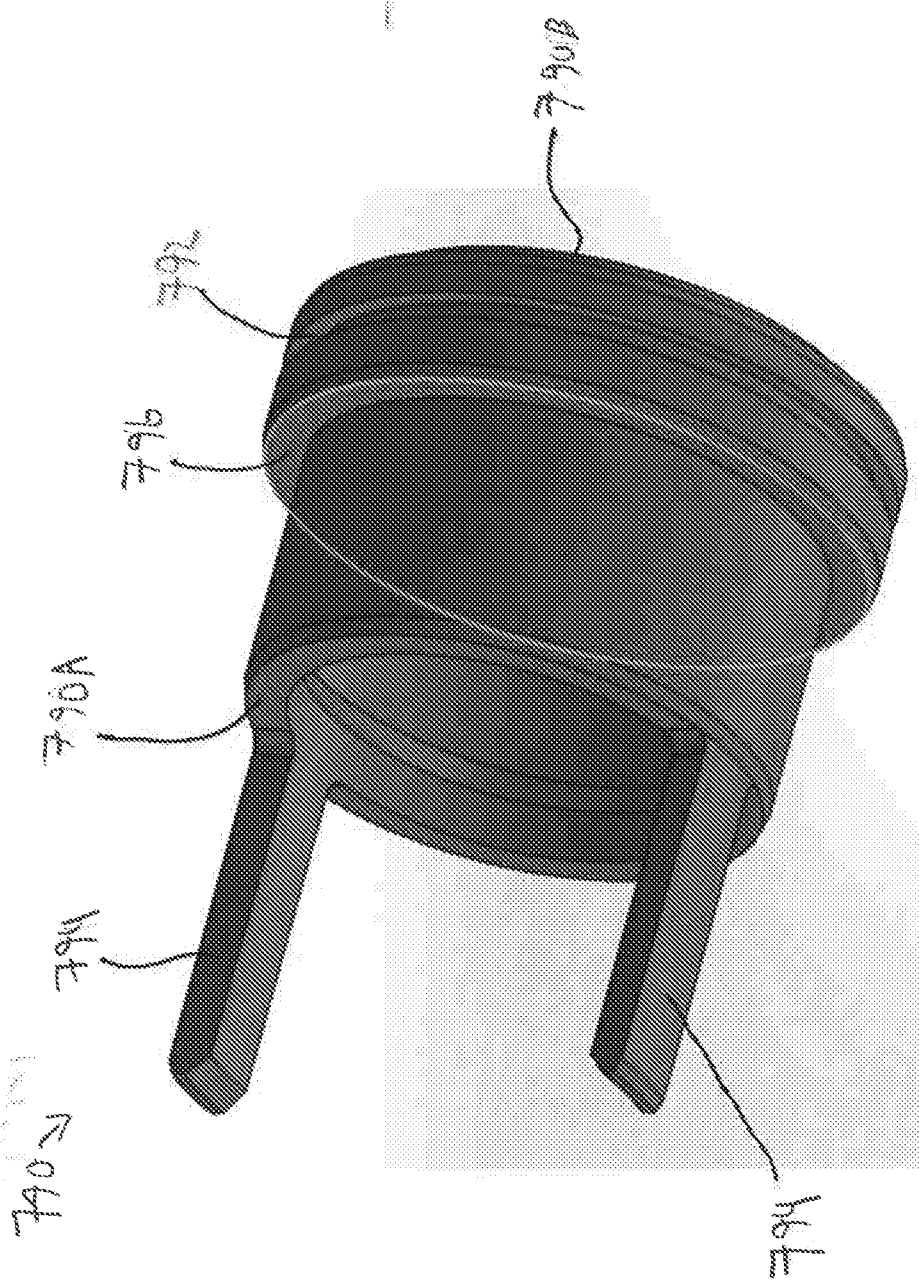

FIG 22

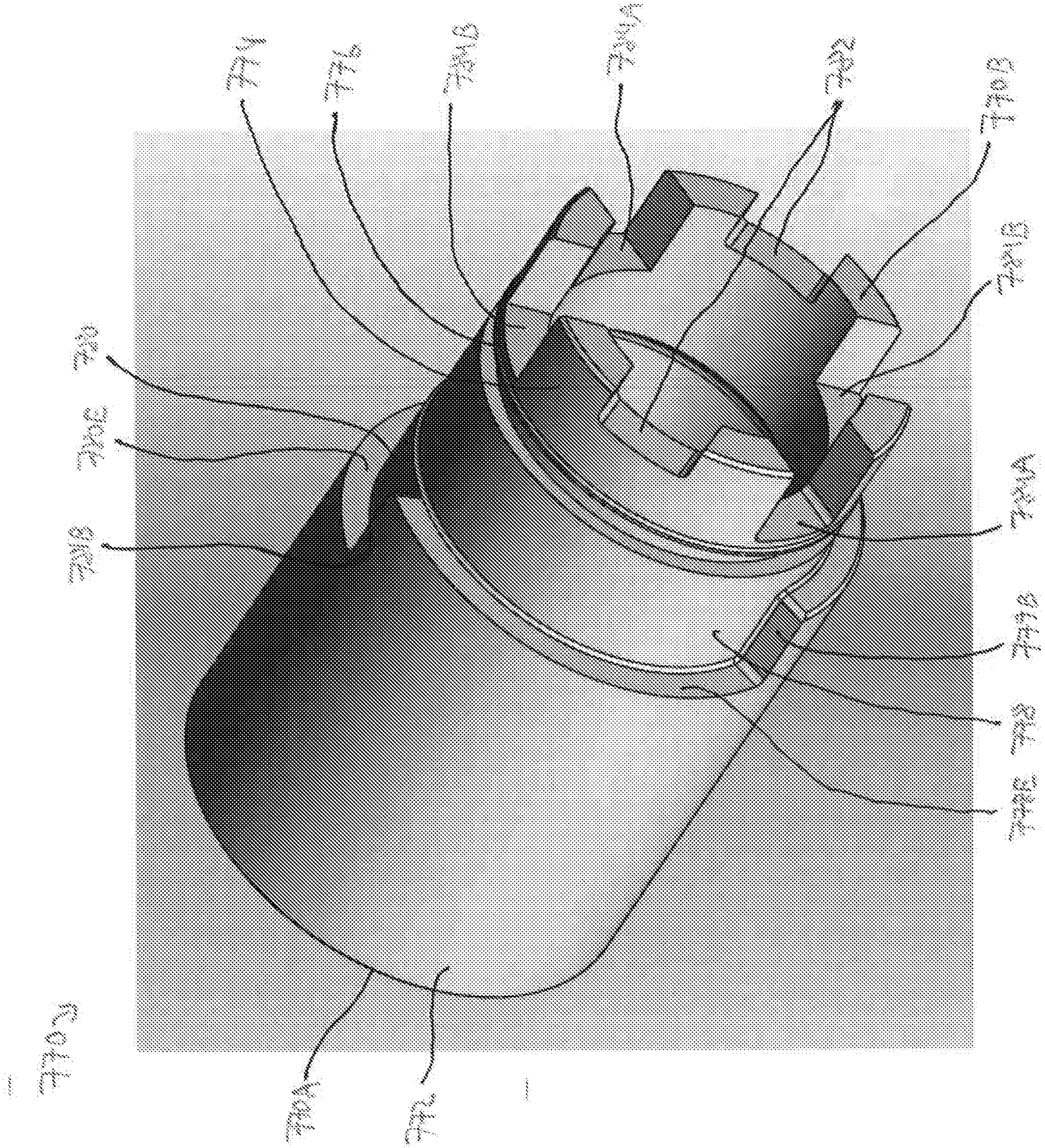

FIG 26

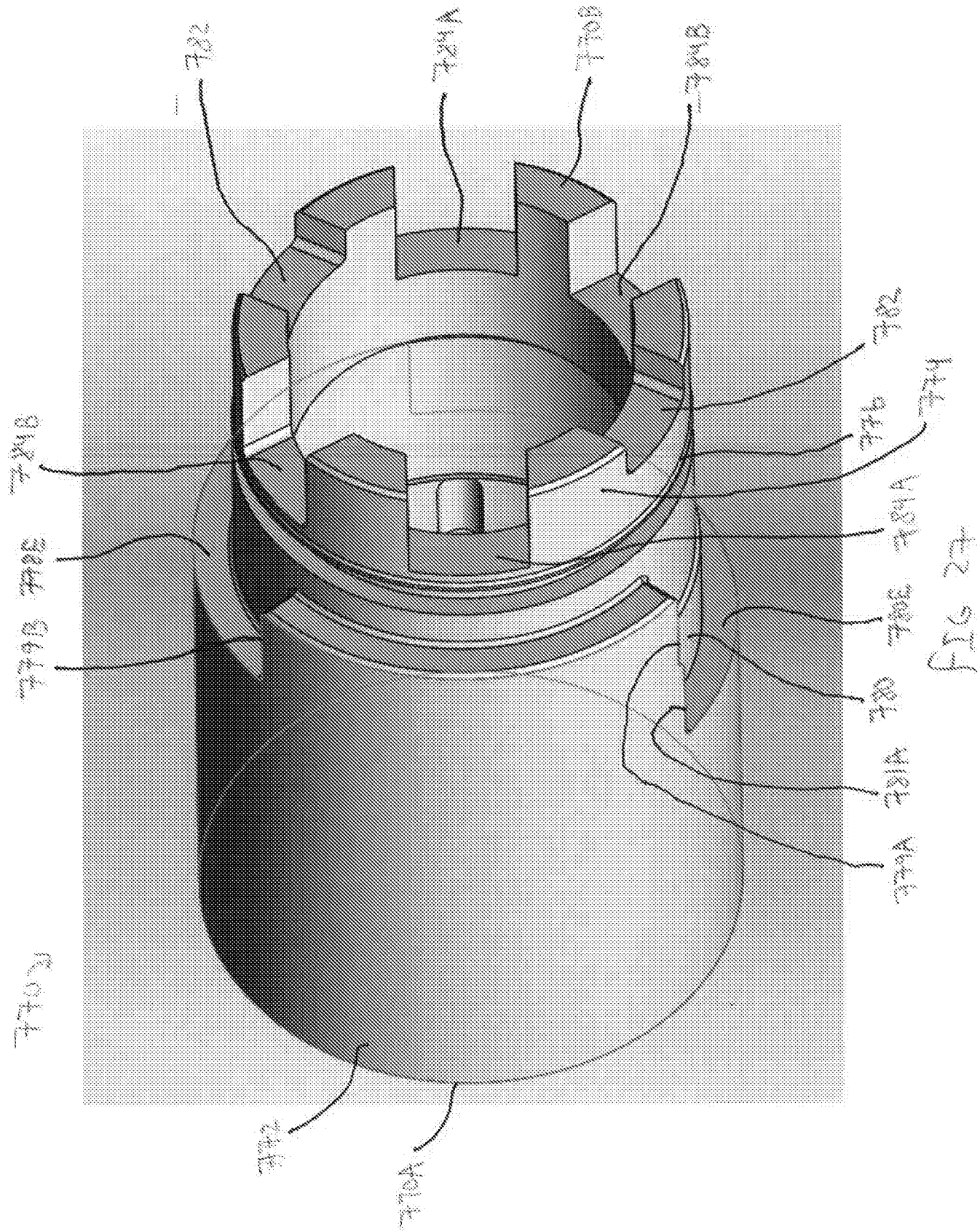
782
784A
770B
784B
782
774
776
784A
780E
780
781A
779A
784B
780E
779B
770
772
770A

FIG 27

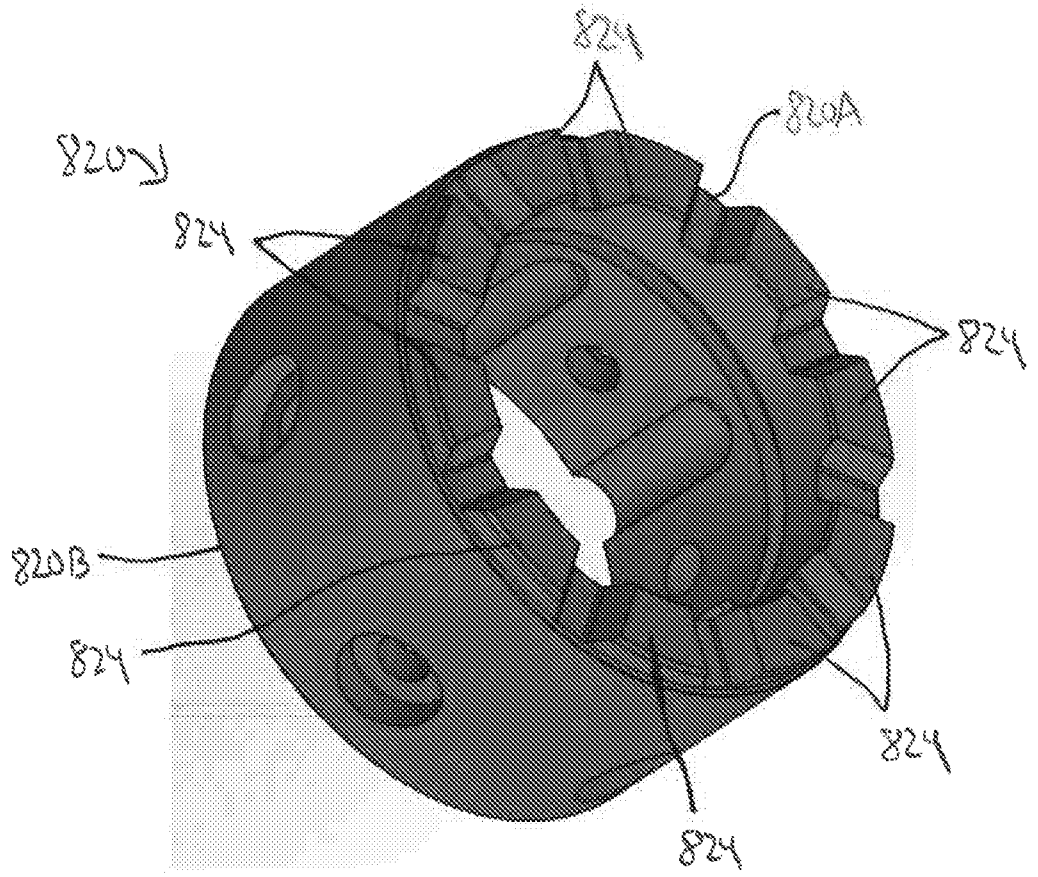
824
820A
820Y
824
824
820B
824
824
824

FIG 28

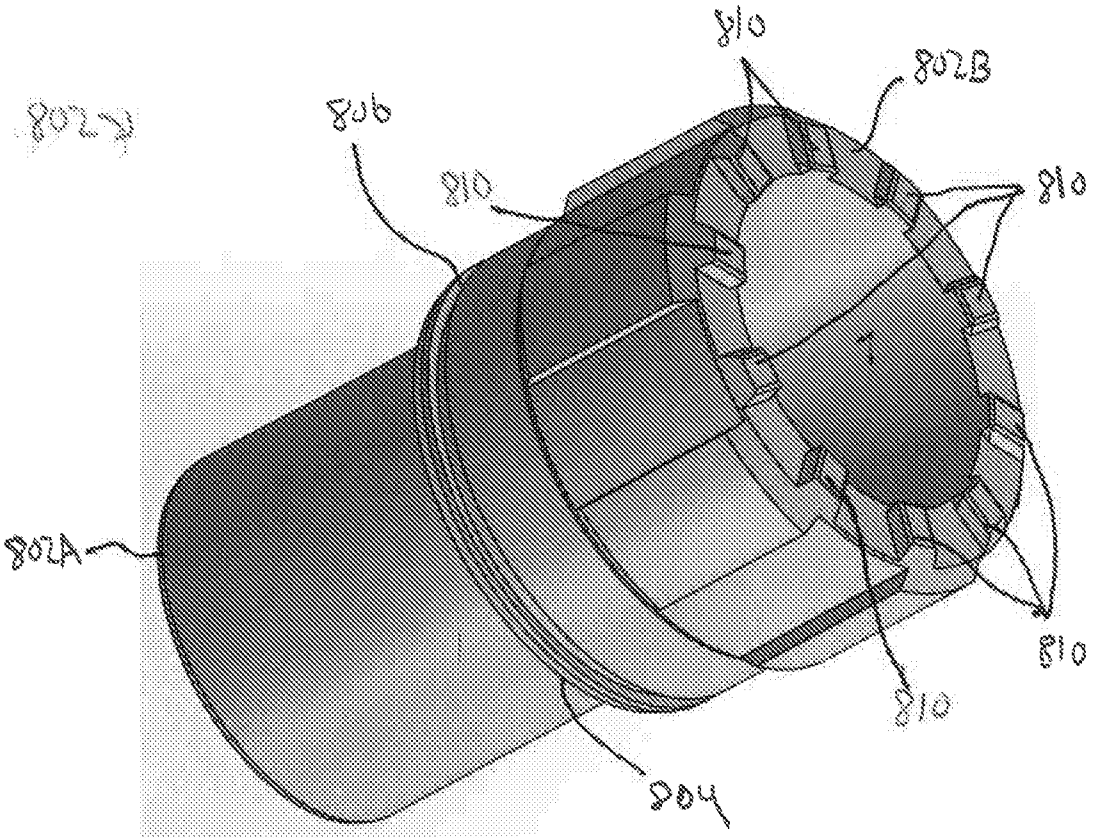
810
802B
806
802Y
810
810
802A
810
810
804

FIG 29

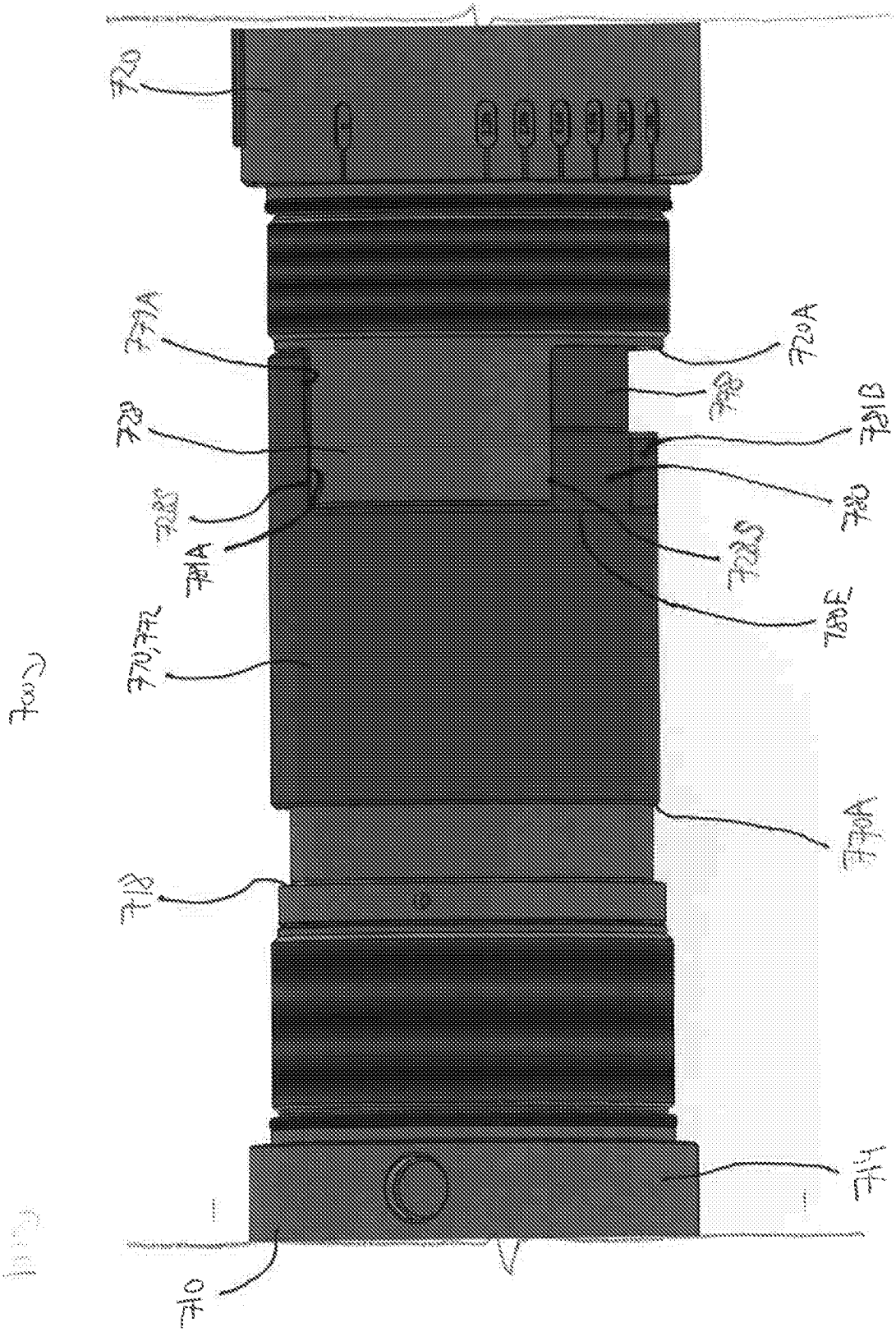

FIG 30

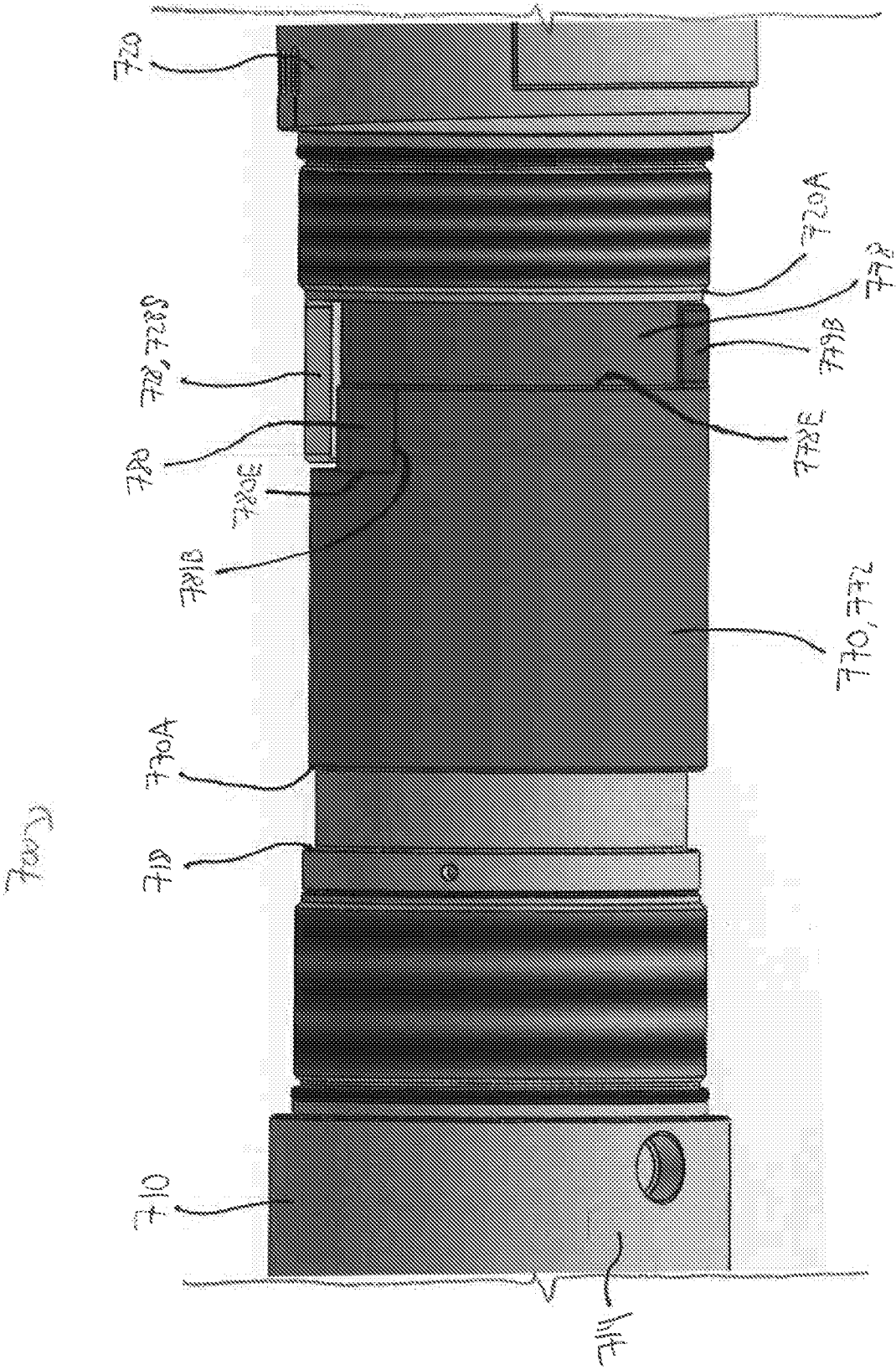
720
720A
778
779B
778E
778, 778S
780
780E
781B
770, 772
770A
710
700D
710
Hit

FIG 31

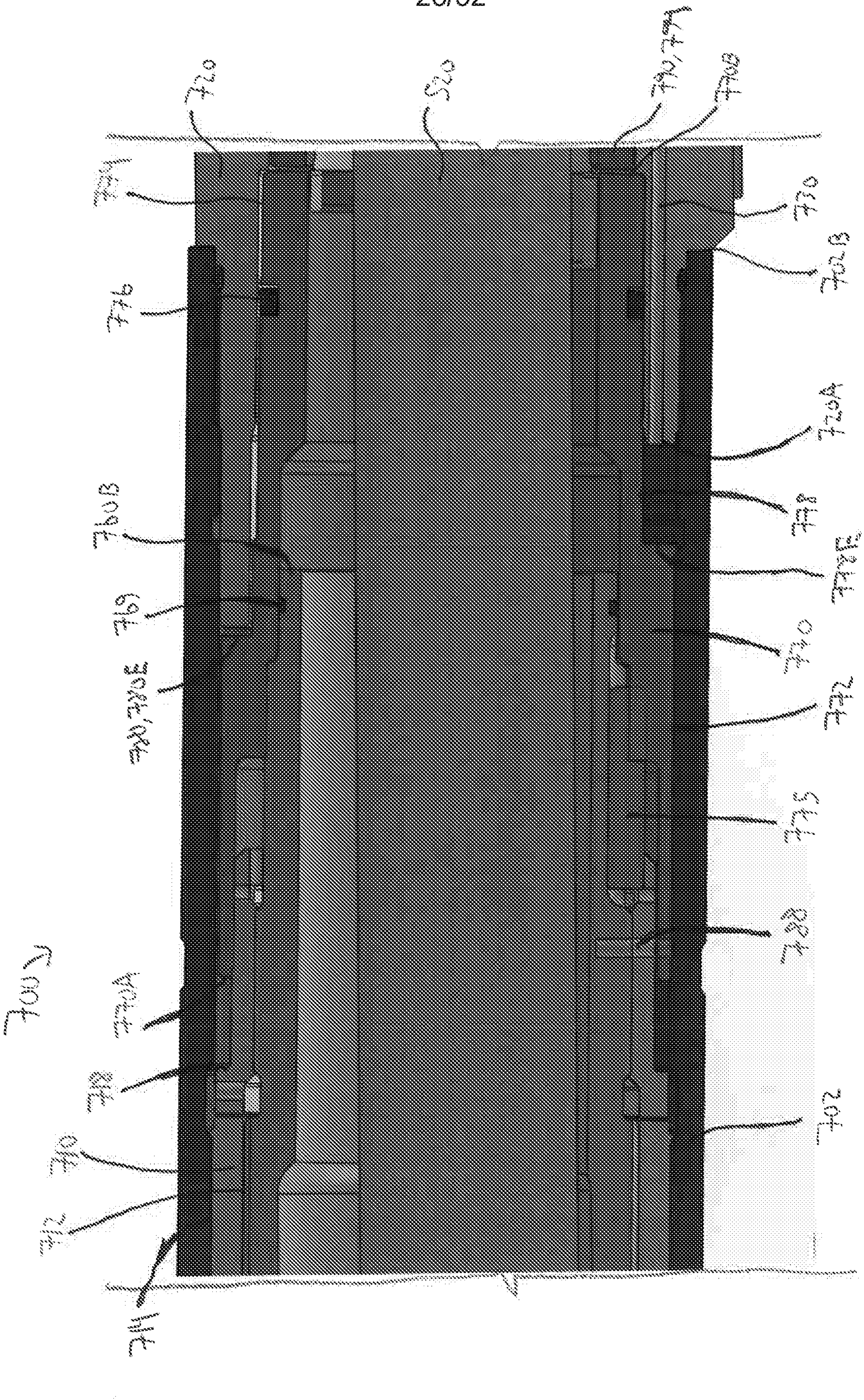
720
520
730
702B
720A
778
740
772
775
788
702
776
760B
769
770A
710
712
714
700

FIG 32

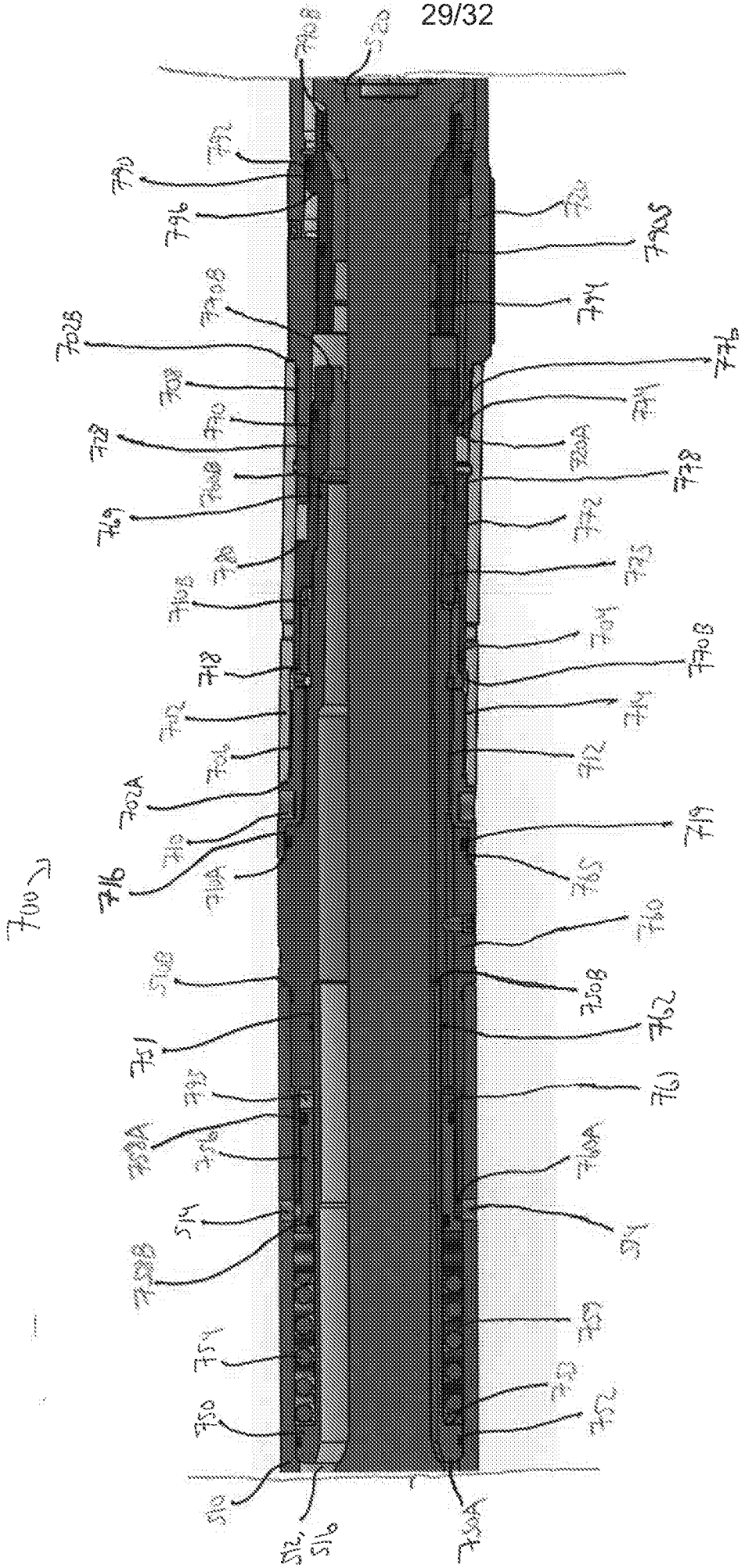

FIG 33

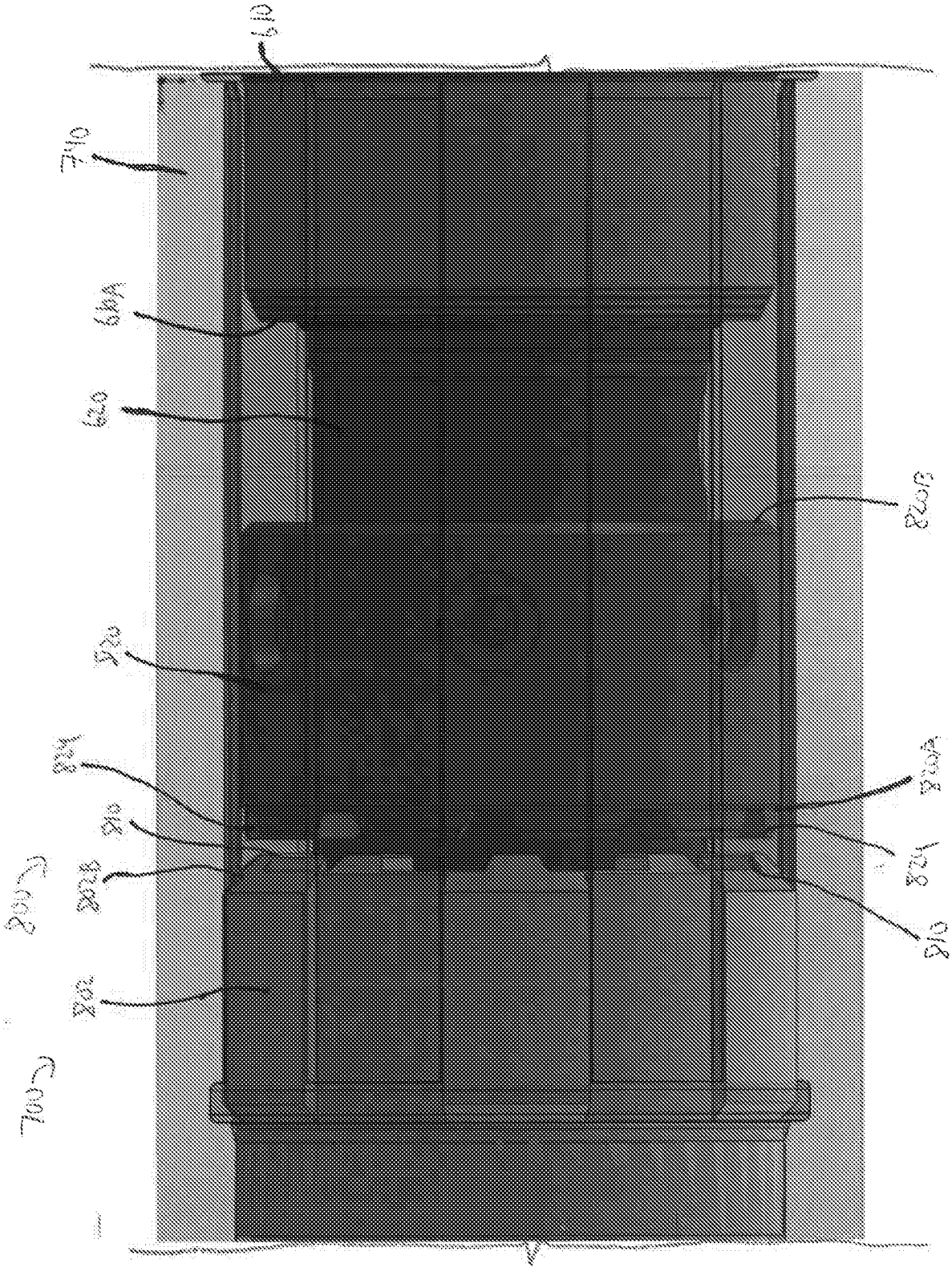

FIG 34

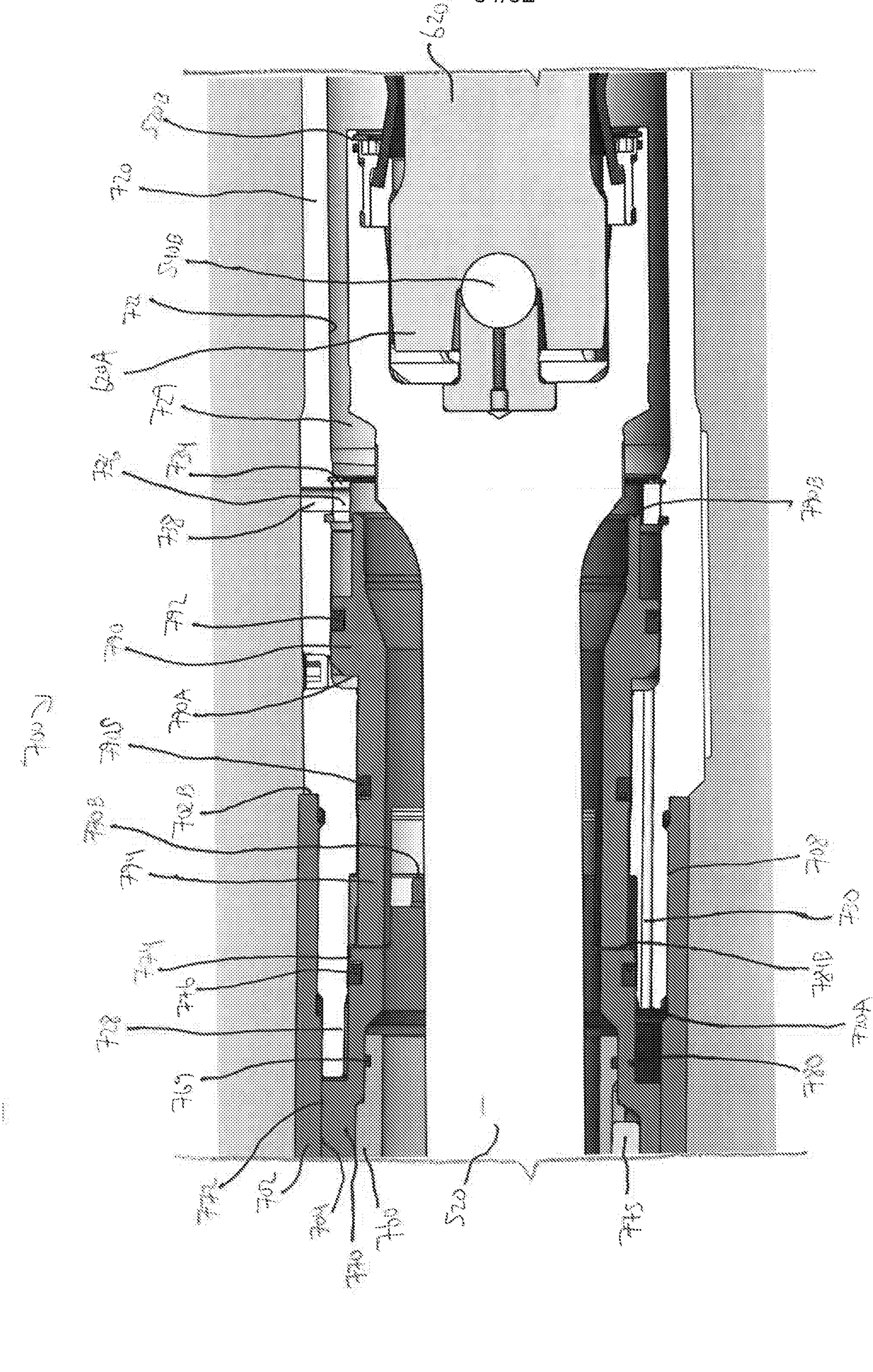

FIG 35

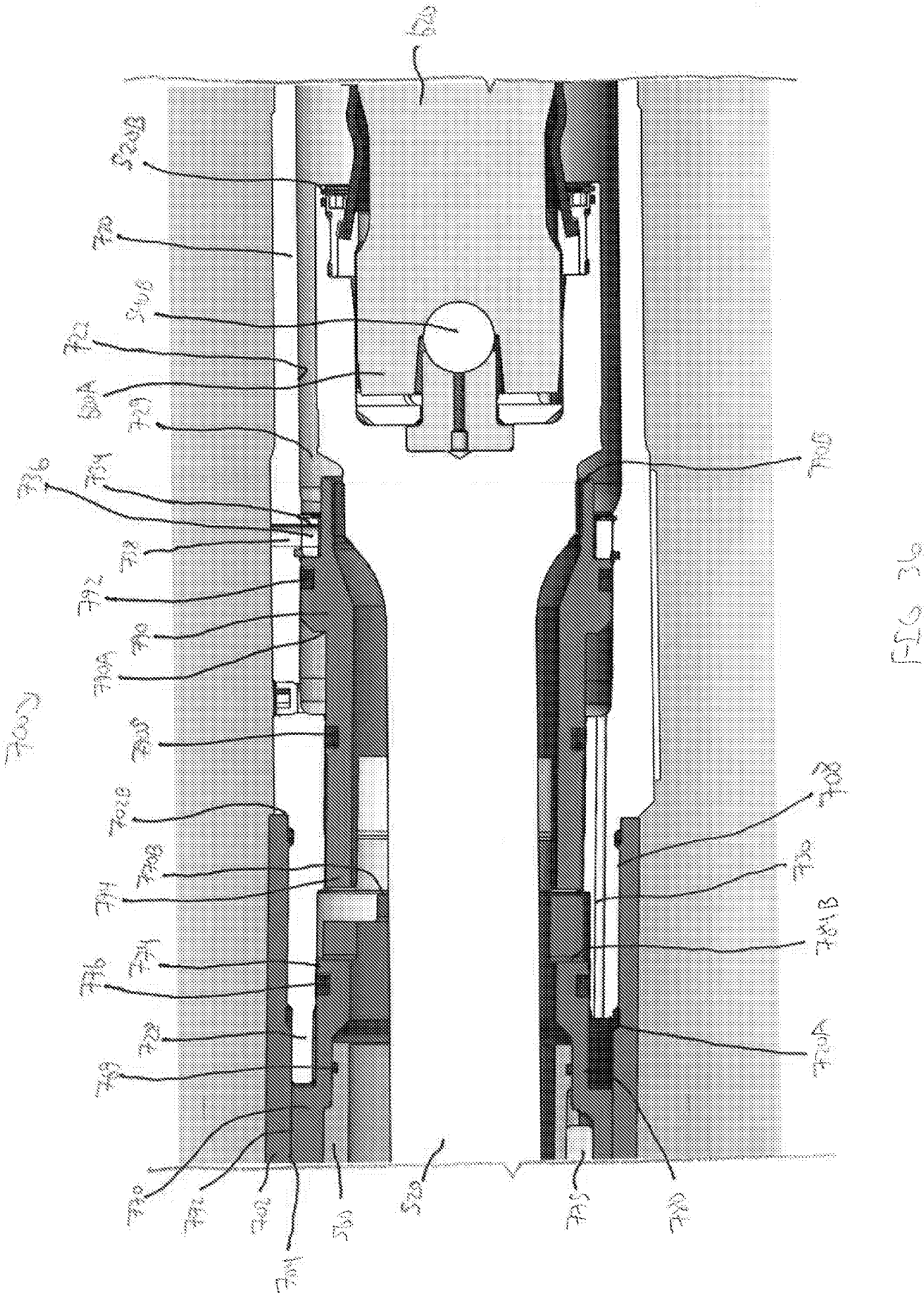

FIG 36

INTERNATIONAL SEARCH REPORT

International application No.
PCT/US19/61128

A. CLASSIFICATION OF SUBJECT MATTER

IPC - E21B 3/03, 7/06, 7/08 (2020.01)

CPC - E21B 3/03, 7/062, 7/067

According to International Patent Classification (IPC) or to both national classification and IPC

B. FIELDS SEARCHED

Minimum documentation searched (classification system followed by classification symbols)
See Search History document

Documentation searched other than minimum documentation to the extent that such documents are included in the fields searched
See Search History document

Electronic data base consulted during the international search (name of data base and, where practicable, search terms used)
See Search History document

C. DOCUMENTS CONSIDERED TO BE RELEVANT

Category*	Citation of document, with indication, where appropriate, of the relevant passages	Relevant to claim No.
X	US 2006/0254819 A1 (MORIARTY KA) 16 November 2006; figures 4, 7; paragraphs [0044], [0045], [0052], [0054], [0056], [0058]	1, 2, 5, 6, 10, 14, 18, 19, 24, 25, 28
---		---
Y		3, 9, 15, 21, 27
Y	US 2010/0126774 A1 (DOWNTON G) 27 May 2010; figure 2A; paragraphs [0031], [0040]	3, 15
Y	US 2014/0284110 A1 (SAVAGE JK et al.) 25 September 2014; figure 6; paragraphs [0002], [0030], [0031]	9, 21
Y	US 2009/0183921 A1 (GURJAR R et al.) 23 July 2009; paragraphs [0008], [0026], [0078]	27
A	US 2012/0018218 A1 (ROSENHAUCH I) 26 January 2012; entire document	1-30

☐ Further documents are listed in the continuation of Box C. ☐ See patent family annex.

* Special categories of cited documents:
"A" document defining the general state of the art which is not considered to be of particular relevance
"D" document cited by the applicant in the international application
"E" earlier application or patent but published on or after the international filing date
"L" document which may throw doubts on priority claim(s) or which is cited to establish the publication date of another citation or other special reason (as specified)
"O" document referring to an oral disclosure, use, exhibition or other means
"P" document published prior to the international filing date but later than the priority date claimed
"T" later document published after the international filing date or priority date and not in conflict with the application but cited to understand the principle or theory underlying the invention
"X" document of particular relevance; the claimed invention cannot be considered novel or cannot be considered to involve an inventive step when the document is taken alone
"Y" document of particular relevance; the claimed invention cannot be considered to involve an inventive step when the document is combined with one or more other such documents, such combination being obvious to a person skilled in the art
"&" document member of the same patent family

Date of the actual completion of the international search	Date of mailing of the international search report
03 January 2020 (03.01.2020)	04 FEB 2020
Name and mailing address of the ISA/US Mail Stop PCT, Attn: ISA/US, Commissioner for Patents P.O. Box 1450, Alexandria, Virginia 22313-1450 Facsimile No. 571-273-8300	Authorized officer Shane Thomas Telephone No. PCT Helpdesk: 571-272-4300

Form PCT/ISA/210 (second sheet) (July 2019)