Nov. 14, 1961 W. E. GOWAN 3,008,749

LIFTING CLAMP

Filed April 2, 1958

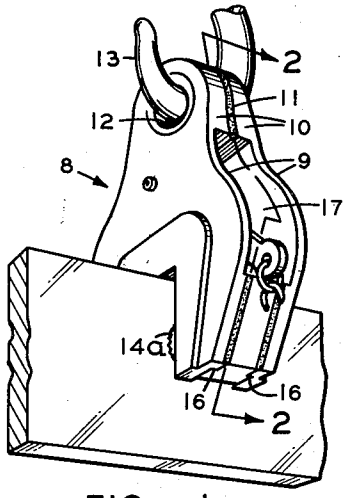


FIG. 1



FIG. 6

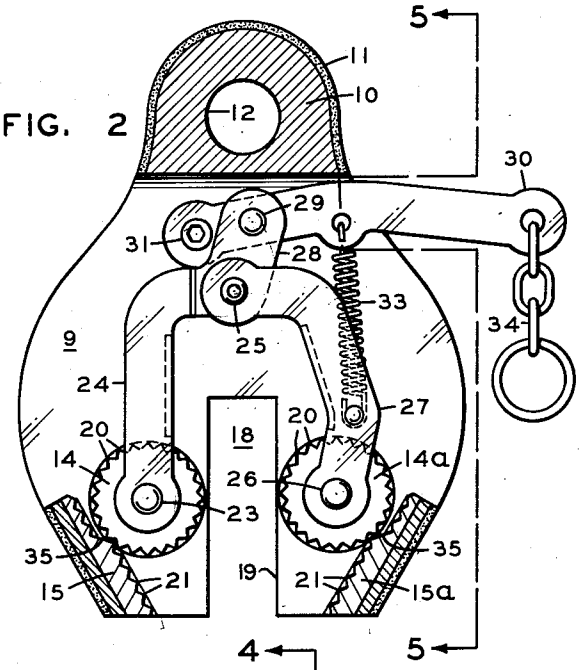


FIG. 2

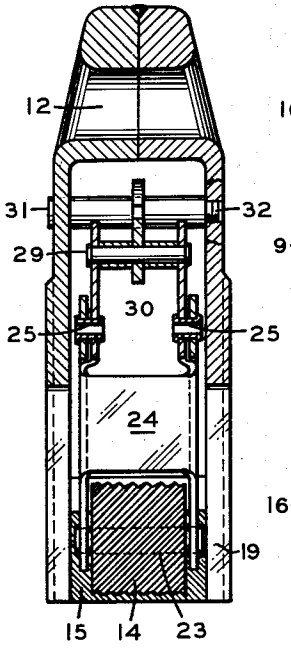


FIG. 4

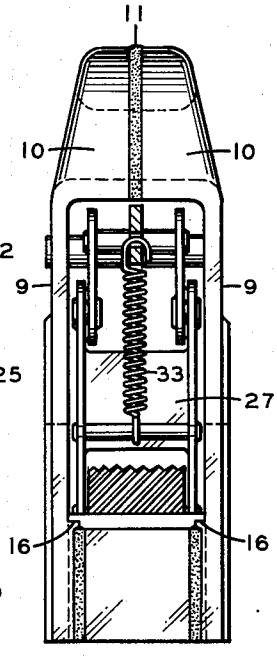


FIG. 5

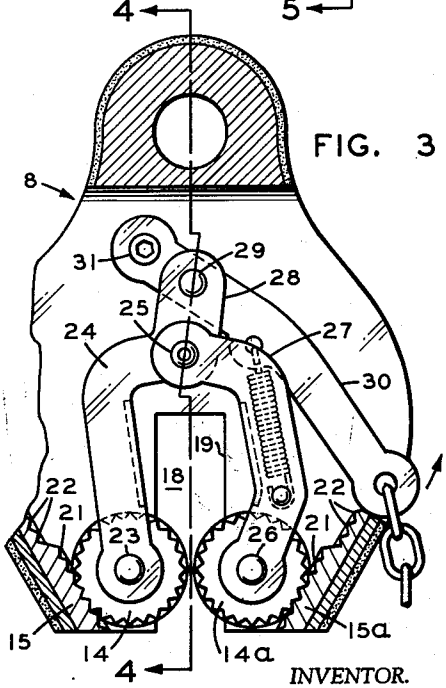


FIG. 3

INVENTOR.
WILLARD E. GOWAN
BY

Cohn and Powell
ATTORNEYS

United States Patent Office 3,008,749 Patented Nov. 14, 1961



3,008,749

# LIFTING CLAMP

Willard E. Gowan, Rte. 2, Box 159, Arnold, Mo.

Filed Apr. 2, 1958, Ser. No. 725,848
7 Claims. (Cl. 294—86)

The present invention relates to improvements in clamping devices used for gripping and lifting heavy metal sheets, plates and bars.

An object of the invention is to provide an improved lifting clamp of strong and rugged construction having extraordinary gripping power and lifting capacity for its size and weight.

Another object is to provide improved means in the form of coacting, toothed rollers for gripping the load object.

Yet another object is directed to the provision of an improved lifting clamp having grip rollers which are supported directly by the clamp body. Accordingly, load forces are transmitted directly to the clamp body instead of through links and pivot members, eliminating sources of failure present in conventional clamps.

Another object is to provide linkage means of novel character which interconnect the grip rollers and enable them to be moved in unison into and out of engagement with a load object, but which linkage means are not subjected to load forces.

Yet another object is achieved in a lifting clamp of the character described wherein the gripping members have toothed surfaces in meshing, rolling contact with rack members arranged to direct and hold the grip member in tight wedging engagement with the load object.

These and other objects and advantages including construction features that make for economy of manufacture are achieved in the lifting clamp illustrated and described herein.

In the drawing:

FIG. 1 is a perspective view showing the lifting clamp of my invention with a load object carried thereby;

FIG. 2 is a vertical sectional view through the clamp with the clamping rollers arranged in a relatively retracted position, the section being taken at a plane indicated by line 2—2 of FIG. 1;

FIG. 3 is a sectional view similar to FIG. 2 but with the rollers positioned near the lower end of the clamp body, or in a normally gripping position;

FIG. 4 is a vertical sectional view taken at line 4—4 of FIG. 3;

FIG. 5 is a vertical sectional view taken at a plane indicated by line 5—5 of FIG. 2, and

FIG. 6 illustrates the pattern of the impression made by the roller elements on a load object.

Referring now by numerals of reference to the drawings, 8 designates the body of the clamp which is formed for the most part by a pair of opposed side plates 9. Relatively thickened upper parts 10 of the plates 9 are integrally united by a welded peripheral seam indicated at 11. The clamp body is provided with an eye 12 in the solid upper portion, the eye 12 serving to receive a hook 13 of a hoisting chain or cable. Below the eye 12 the side plates 9 are spaced apart to accommodate between them the grip rollers 14 and 14*a* and associated mechanism to be hereinafter described for adjusting the positions of the said rollers in the clamp body. The side plates taper downwardly from a relatively broad midsection and are permanently united by welding to bars 15 and 15*a* that fit between and extend convergingly along the lower side edges of plates 9. The bars 15 and 15*a* also herein referred to as rack bars, have offset shoulders 16 (FIG. 1) that interfit with corresponding shoulders on the side plates for reinforcing the junction between plate 9 and the said rack bars.



As best appears in FIGS. 1, 2 and 3, openings 17 of substantial size are present in the sides of the body member, through which openings the rollers and their control mechanism are introduced into the clamp body. The clamp body is also provided with a transverse passageway or slot 18 defined by recesses 19 that extend longitudinally, inwardly from the lower ends of the side plates 9.

The grip rollers 14 and 14*a* have teeth 20 which, by preference, are inclined to the axis of the rollers somewhat in the manner of helical gear teeth. The teeth of rollers 14 and 14*a* however extend in angular relation to each other, or, as indicated in FIG. 6, so that the linear impressions made by the roller teeth on a work object being gripped are in criss-cross relationship.

The rollers 14 and 14*a* are adapted to roll on the bars 15 and 15*a* constituting tracks, the bars being provided with rack teeth 21 that mesh with the teeth 20 of the associated roller. The teeth 21 prevent slippage of the rollers on the bars. It will be noted that several of the teeth 22 near the upper ends of the rack bars are offset inwardly with respect to the teeth 21. Such results in the formation of a stop shoulder or dwelling station 35 for the rollers. When the rollers are retracted to a position near the upper extremities of the bars (FIG. 2) they are detained there by the stop shoulders 35, the spring 33 tending to urge the rollers outwardly into the stop shoulders. After the lever 30 is moved downwardly enough to move the rollers downwardly out of engagement with stop shoulders 35, it is seen that tension spring 33 imposes a downward force on lever 30 that tends to move the lever 30, and hence tends to move the arm members 24 and 27 and the entire roller assembly downwardly to the position indicated in FIG. 3.

Roller 14 is rotatively mounted on a pin 23 carried on the lower end of an arm member 24, constituting an offset lever. The fulcrum of arm member 24 is constituted by coaxial pins 25 located substantially in the longitudinal medial plane of the passageway 18. Roller 14*a* is carried on a bearing pin 26 at the lower end of an arm member 27 which is pivoted to arm member 24 by the pins 25. Arm member 24 has an arm portion 28 extending upwardly beyond the axis of pins 25, portion 28 being connected by a pin 29 to a lever 30. Lever 30 is pivoted to the clamp body by a pin 31, one end 32 of which is threaded in a threaded bore in one of the side plates 9 of the body, as shown in FIG. 4. Unthreading and removal of the fulcrum pin 31 for lever 30 enables the entire roller assembly to be detached and removed from the clamp body as a unit through one of the side openings 17. Similarly, securement of the roller assembly to the body is effected by the single threaded pin 31.

A tension spring 33 is connected at its upper end to the lever 30 and at its lower end to the arm member 27. Spring 33 acts directly on arm member 27 to urge the arm member 27 outwardly to maintain roller 14*a* in meshing engagement with the sloping rack bar 15*a*. Spring 33 also acts through common pivot pins 25 to urge the arm member 24 outwardly to maintain roller 14 constantly in mesh with its rack bar 15. This results because of the counterclockwise force on arm member 27 acting on arm member 24 through their common pivot pins 25 to create a clockwise force on arm member 24, tending to hold roller 14 outwardly against its rack bar 15.

In addition to maintaining the rollers in operative meshed relationship with their respective rack bars 15 and 15*a* the spring 33 imposes a downward force on lever 30 that tends to move the lever, and hence tends

to move the arm members 24 and 27 and entire roller assembly downwardly to the positions thereof illustrated in FIG. 3 after the rollers 14 and 14*a* are disengaged from stop shoulders 35, all as described previously. The lever 30 projects outwardly of the clamp body and preferably carries a control chain 34 at its outer end.

From the foregoing description it will appear that the grip rollers 14 and 14*a* are adapted to be retracted upwardly by swinging lever 30 upwardly. As they roll upwardly the rollers also move outwardly along the divergent rack bars 15. In their uppermost positions the rollers are clear of the passageway 18 and are retained in their said upper positions, against the action of spring 33, by the stop shoulders formed on the said rack bars. The lifting clamp may then be applied by introducing the load object into the passage 18 of the clamp body and exerting a light downward tug on the control chain 34. The rollers 14 and 14*a* are thereby caused to ride over the stop shoulders 35 of the rack bars and, moving downwardly under the action of spring 33, to come to rest wedged between the surfaces of the load object and the sloping rack bars 15 and 15*a*. When the clamp is lifted the load object becomes tightly gripped by the roller teeth, the downward load force on the rollers tending to increase their grip on the object. The object is released by raising the lever 30.

From the foregoing description it will be understood that the grip rollers are caused to move simultaneously along their rack bars, maintaining their opposed relationship in all positions. It will appear that the internal mechanism for controlling movement of the grip rollers and the grip rollers themselves are installed and removed as a unitary assembly to and from the clamp body. It will further appear that load forces are transmitted to the clamping body directly from the grip rollers and not through any of the linkage by which movement of the grip rollers is controlled.

Whereas I have described a particular, preferred form of clamp, it will be understood that changes may be made in the described parts and their arrangement without departing from the spirit and full intendment of the invention which is defined by the appended claims.

I claim as my invention:

1. A lifting clamp comprising a hollow clamp body provided with a passageway extending through opposite sides of the body and extending through the lower end of the body, the passageway extending upwardly from the lower end of the body, downwardly convergent tracks in said body, one track on each side of said passageway, said tracks terminating at the sides of said passageway, rollers in said body, one roller engaging each track, a lever pivoted to the body, arm members in said body, means pivotally connecting said arm members, each arm member being connected to one roller, means pivotally connecting one of said arm members to said lever, and a tension spring interconnecting said lever with one of said arm members, the connection of the tension spring to the lever being at the same side of the lever's pivotal connection to the body as the pivotal connection of the arm member to said lever, said rollers being extensible into the passageway while still engaging the tracks so as to grasp an article to be lifted.

2. A lifting clamp comprising a hollow clamp body provided with a passageway extending through opposite sides of the body and extending through the lower end of the body, the passageway extending upwardly from the lower end of the body, a pair of downwardly convergent tracks in said body, one track being disposed on each side of said passageway, said tracks terminating at the sides of said passageway, rollers in said body, one roller engaging each track, a lever pivoted to the body, a pair of arm members in said body, said arm members having their lower ends connected to the rollers, means pivotally connecting the opposite end of one arm member to the other arm member intermediate its ends, means pivotally connecting the opposite end of said other arm member to said lever, and a tension spring connected to the lever at the same side of its pivotal connection to the body as the pivotal connection of the said other arm member to said lever, and connected to one of said arm members, the tension spring tending to urge said rollers outwardly and downwardly against said tracks, said rollers being extensible into the passageway while still engaging the tracks so as to grasp an article to be lifted.



3. A lifting clamp comprising a hollow clamp body provided with a passageway extending through opposite sides of the body and extending through the lower end of the body, the passageway extending upwardly from the lower end of the body, downwardly convergent tracks in said body, one track being disposed on each side of said passageway, said tracks terminating at the sides of said passageway, rollers in said body, one roller engaging each track, said rollers being adapted to move away and toward each other in said passageway while engaging the tracks so as to release and grasp respectively an article to be lifted, a lever pivoted to said body above said rollers, a first arm member and a second arm member in said body below the lever and above the rollers, said arm members having their lower ends connected to said rollers, the opposite end of said first arm member being pivotally connected to the second arm member intermediate the ends of said second arm member, the opposite end of said second arm member being pivotally connected to said lever, and a tension spring interconnecting said lever with said first arm member, the connection of said tension spring with said lever being at the same side of the lever's pivotal connection to the body as the pivotal connection of the second arm member to said lever and at a distance farther from the lever's pivotal connection to the body than the pivotal connection of the second arm member to said lever, said tension spring tending to urge said rollers outwardly and downwardly against said tracks.

4. A lifting clamp comprising a hollow clamp body provided with a passageway extending through opposite sides of the body and extending through the lower end of the body, the passageway extending upwardly from the lower end of the body, tracks in said body, one track being disposed on each side of said passageway, the tracks terminating at the sides of the passageway, rollers in said body, one roller engaging each track, said tracks being downwardly convergent adapting said rollers to move toward and away from each other in said passageway while engaging the tracks so as to grasp and release respectively an article to be lifted, a lever pivoted to said body above said rollers, a pair of arm members in said body below the lever and above the rollers, said arm members being pivoted together, each of said arm members being connected to one of said rollers, means pivotally connecting one of said arm members to said lever at one side of the pivotal connection of such lever to said body, and a tension spring connected to the lever at the same side of the lever's pivotal connection to the body as the pivotal connection of the one arm member to said lever, said tension spring being connected to one of said arm members, the tension spring tending to urge said lever downwardly and hence tending to urge said rollers downwardly and outwardly against said tracks.

5. The combination and arrangement of elements as recited above in claim 4, but further characterized by the provision of a stop shoulder on at least one of said tracks adapted to engage the roller on said track when the lever is raised, said tension spring tending to urge said roller outwardly against said stop shoulder, said stop shoulder retaining the rollers in retracted position.

6. The combination and arrangement of elements as recited above in claim 4, but further characterized in

that the tension spring has one end connected to the lever at the same side of the lever's pivotal connection to the body as the pivotal connection of the one arm member to said lever and at a distance farther from the lever's pivotal connection to the body than the pivotal connection of the arm member to said lever, the tension spring having its other end connected to the other of the arm members, the tension spring tending to urge said lever downwardly and tending to urge said arm members apart and said rollers outwardly against said tracks.

7. A lifting clamp comprising a hollow clamp body provided with a passageway extending through opposite sides of the body and extending through the lower end of the body, the passageway extending upwardly from the lower end of the body, tracks in said body, one track being disposed on each side of said passageway, said tracks terminating at the sides of the passageway, rollers in said body, one roller engaging each track, said tracks being downwardly convergent enabling said rollers to move toward and away from each other in said passageway while engaging the tracks so as to grasp and release respectively an article to be lifted, a lever pivoted to said body above said rollers, a first arm member and a second arm member in said body below the lever and above the rollers, means pivoting one end of the first arm member to the said second arm member intermediate the ends of said second arm member, said arm members having their lower ends connected to said rollers, means pivotally connecting the upper end of said second arm member to said lever, a tension spring having one end connected to the lever at the same side of the lever's pivotal connection to the body as the pivotal connection of the second arm member to said lever and at a distance farther from the lever's pivotal connection to the body than the pivotal connection of said second arm member to said lever, the tension spring having its other end connected to said first arm member, and a stop shoulder intermediate of at least one of said tracks engaging the roller on said track when the lever is raised, the tension spring tending to urge the rollers outwardly and hence tending to urge one of the rollers against the stop shoulder so as to retain said rollers in a retracted position, the tension spring tending to urge the lever downwardly, and hence tending to urge the rollers downwardly on said tracks.



References Cited in the file of this patent

UNITED STATES PATENTS

| | | |
|---|---|---|
| 2,387,408 | Pertuit | Oct. 23, 1945 |
| 2,461,394 | Plante | Feb. 8, 1949 |
| 2,559,223 | Murray | July 3, 1951 |