March 19, 1968 L. J. LAPOINTE 3,373,857

MECHANISM FOR POWER OPERATING TYPE ACTIONS BOTH TO AND FROM THE PRINTING POINT

Filed March 29, 1966 4 Sheets-Sheet 1

Fig_1

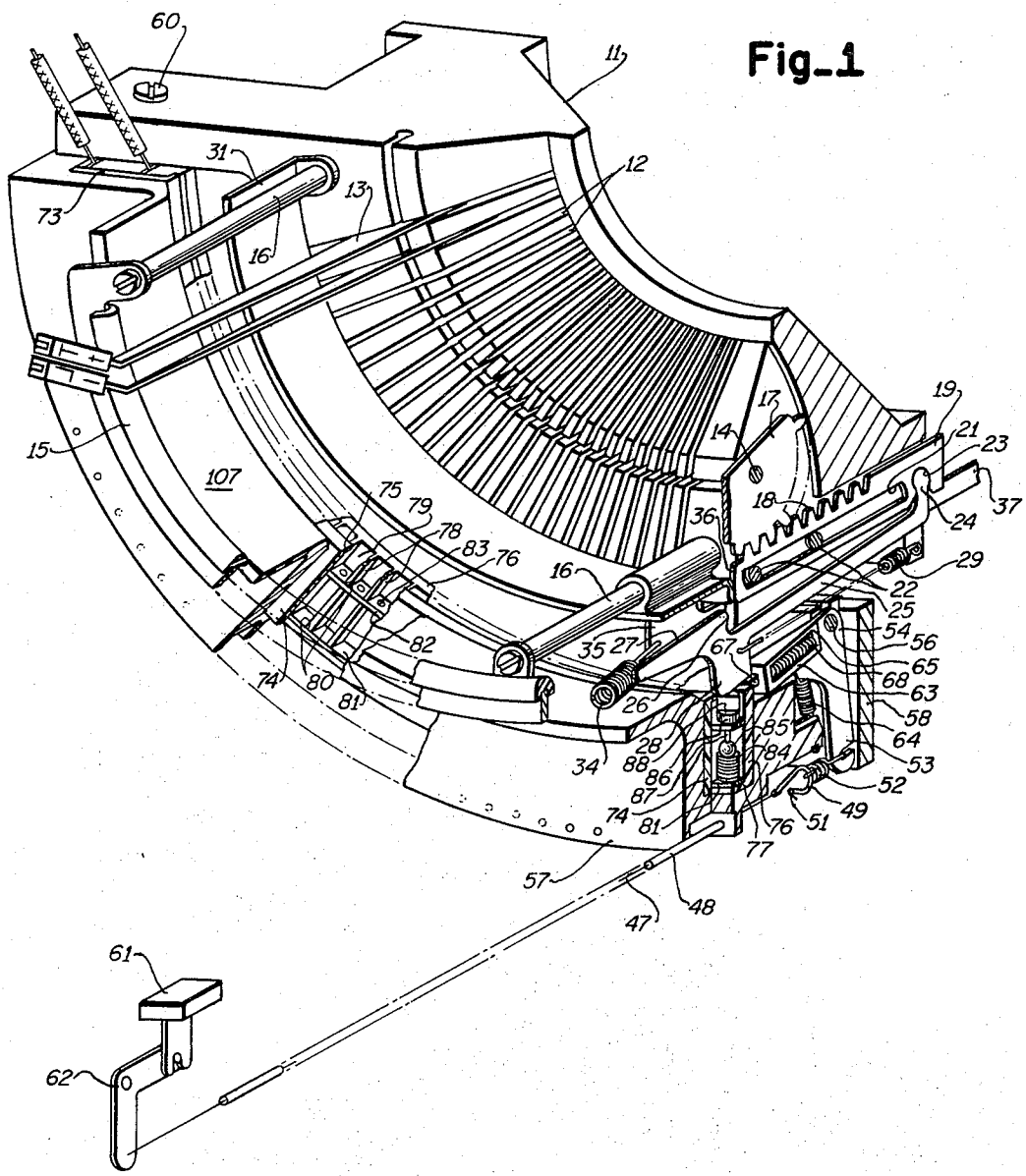

INVENTOR
LLOYD J. LAPOINTE

BY Thomas S. Rose
Joseph R. Spalla

ATTORNEYS

March 19, 1968 L. J. LAPOINTE 3,373,857

MECHANISM FOR POWER OPERATING TYPE ACTIONS BOTH TO AND FROM THE PRINTING POINT

Filed March 29, 1966 4 Sheets-Sheet 2

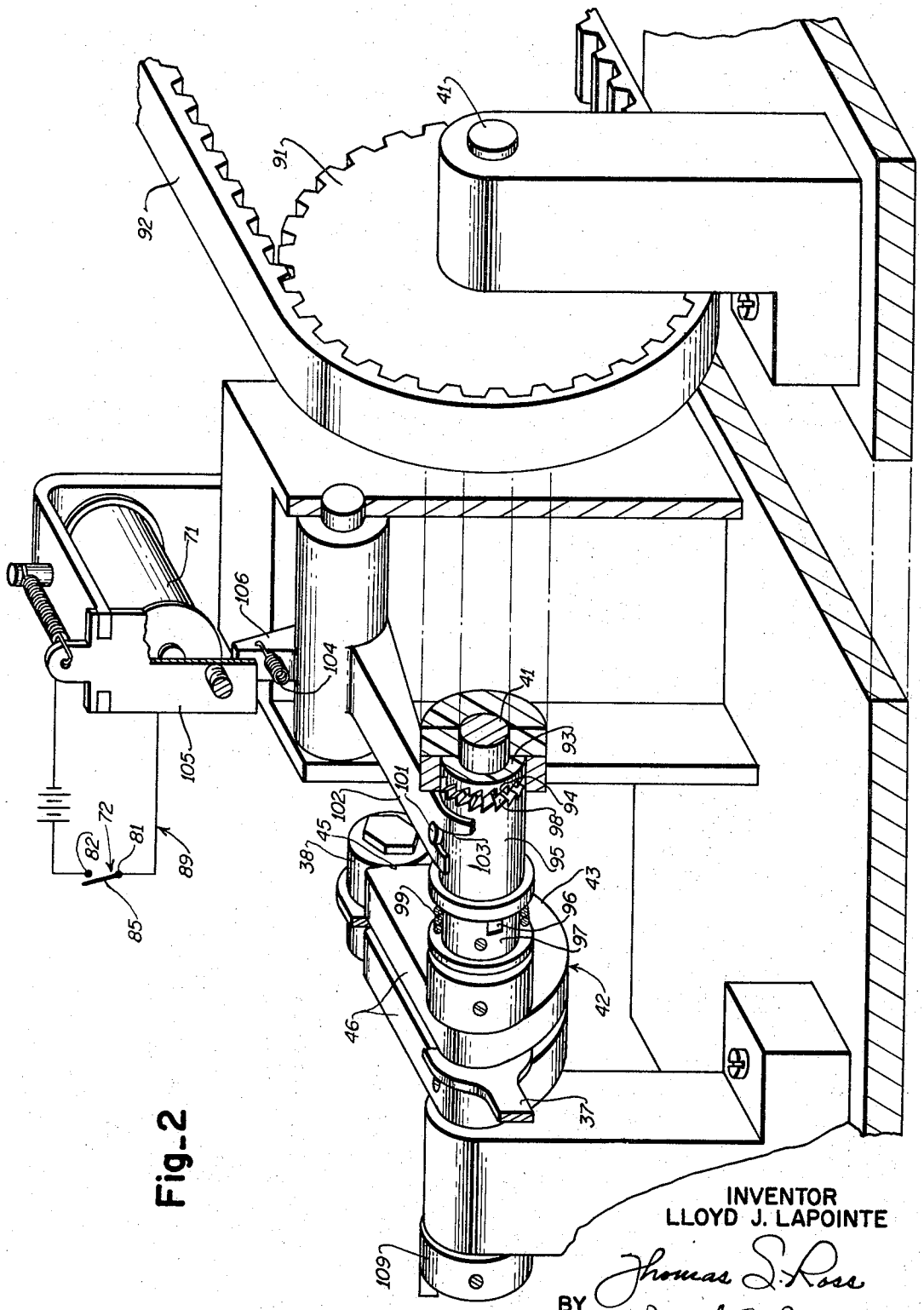

Fig-2

INVENTOR
LLOYD J. LAPOINTE

BY Thomas L. Ross
Joseph R. Spalla
ATTORNEYS

March 19, 1968 L. J. LAPOINTE 3,373,857

MECHANISM FOR POWER OPERATING TYPE ACTIONS BOTH TO AND FROM THE PRINTING POINT

Filed March 29, 1966 4 Sheets-Sheet 3

Fig-3A

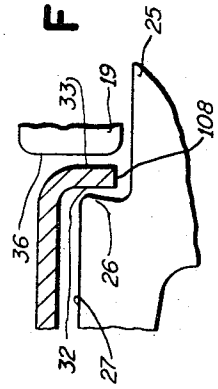

Fig-3B

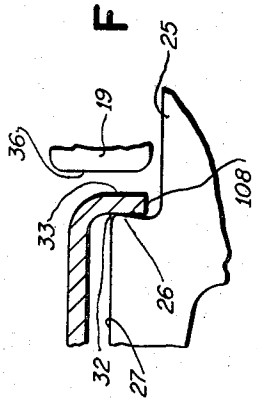

Fig-3

March 19, 1968 L. J. LAPOINTE 3,373,857

MECHANISM FOR POWER OPERATING TYPE ACTIONS BOTH TO AND FROM THE PRINTING POINT

Filed March 29, 1966 4 Sheets-Sheet 4

Fig. 4

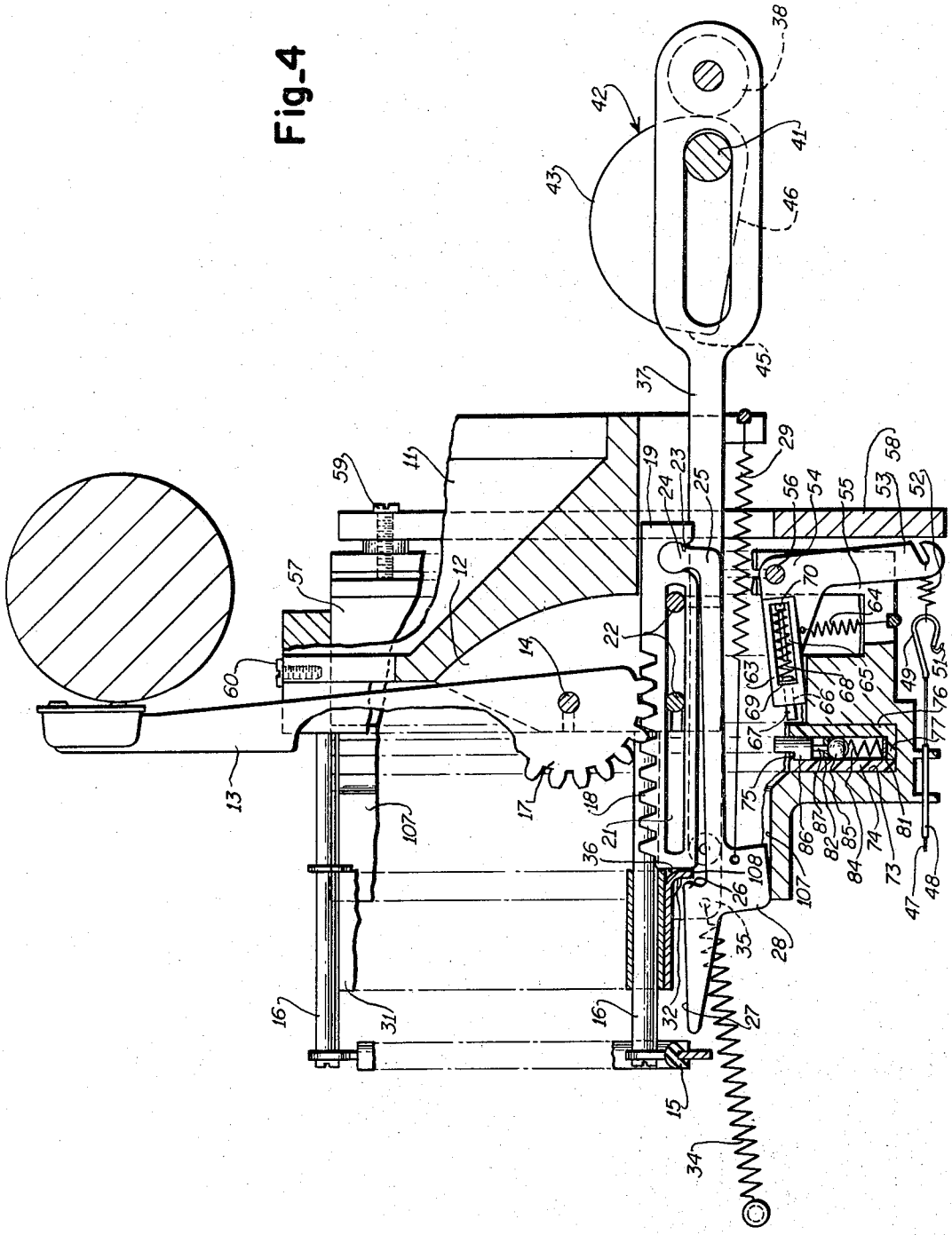

United States Patent Office

3,373,857

Patented Mar. 19, 1968

3,373,857

MECHANISM FOR POWER OPERATING TYPE ACTIONS BOTH TO AND FROM THE PRINTING POINT

Lloyd J. Lapointe, West Hartford, Conn., assignor to Litton Business Systems, Inc., a corporation of New York

Filed Mar. 29, 1966, Ser. No. 538,302
8 Claims. (Cl. 197—14)

ABSTRACT OF THE DISCLOSURE

A typewriter having a common cyclic reciprocatable actuator and type actions arranged to be coupled selectively to the actuator which is operative under spring power to drive an action to printing position, and under motor power to drive said action from printing to returned position.

This invention relates to mechanism for powering type actions from rest to printing position and return; more particularly it relates to such mechanism having a common cyclically operable actuator for driving type actions selectively coupled thereto over their full stroke to printing position and return; and specifically it relates to such mechanism including a charged spring to propel said actuator and a character selection responsive motor controlled link cyclically operable to release said actuator for propulsion by said spring and to restore said actuator and type action.

Various powered type actions utilizing the energy stored in a spring to propel a type bar are known to the art. Some of these actions employ a power spring individual to each action and utilize motor power to recharge the spring and return the action. These machines require a multiplicity of parts. Other types employ a single power spring to drive a common actuator to which actions may be coupled. In these machines the actuator is motor power returned thereby to recharge the spring but the type action is brought back to rest by an associated return spring. Consequently these latter actions are relatively slow.

In accordance with the present invention a selected type action is spring propelled through the agency of a common actuator which is coupled to a motor powered link. More particularly the selection of a character effects the coupling of its associated action to the common actuator and initiates a machine cycle whereby the actuator is released to drive the selected action under spring power, and after printing, the selected action is driven by the return movement of the actuator to rest position under motor power.

A feature of the present invention results in the fact that the keyboard, printing elements, or type actions, and the control elements are of modular construction thus permitting interchangeability of fonts or keyboards in a basic construction.

An object of the invention is to provide a high speed economical spring propelled type action having a minimum number of elements.

Another object of the invention is in the provision of a spring-motor power powered actuator common to all type actions to drive type actions from rest to printing position and return.

Another object of the invention is to provide a machine of the character described having interchangeable type bar supporting segments and wherein the type bars in each segment may be located wherever desired yet be easily connected to and controlled from a keyboard having standard character key locations.

A further object of the invention is in the provision

of type action wherein type impression may be determined at assembly and be independent of cycle time; wherein selection of more than one character will not result in clashing of type bars or printing of either character and will not jam the machine.

A further object of the invention is in the provision of a spring powered machine wherein only one type action may be in flight at any time and be capable of typing at a rate of up to 30 characters per second.

Other objects and many of the attendant advantages of this invention will be readily appreciated as the same becomes better understood by reference to the following detailed description when considered in connection with the accompanying drawings in which like reference numerals designate like parts throughout the figures thereof and wherein:

FIGURE 1 is a partial perspective view with parts cut away showing type action, selection and drive element supporting structure in a machine constructed in accordance with the invention;

FIGURE 2 is a perspective view with parts cut away of the machine cycle control elements;

FIGURE 3 is a cross sectional view through the center of the machine showing the elements of FIGURE 1 in rest positions;

FIGURES 3A and 3B are fragmentary views of elements of FIGURE 3 shown in intermediate active positions; and

FIGURE 4 is a cross sectional view showing the elements of FIGURE 3 at printing position.

Referring now to the drawings wherein like reference characters designate like or corresponding elements throughout the several views there is shown in FIGURE 1 an arcuate segment **11** provided with slots **12** to accommodate a plurality of type bars **13** pivotally mounted on a segment supported fulcrum wire **14** for movement from a rest position (FIGURE 3) to a printing position (FIGURE 4) and return. The character supporting ends of the type bars as shown in FIGURES 1 and 2 are supported on a headrest **15** supported by guide rods **16** secured to the forward face of the segment and extending forwardly therefrom. Three guide rods **16** are provided, one located centrally and the others at each end of the segment, to assure smooth motion of the cyclically operable actuator hereinafter described.

The type bars **13** have a gear segment **17** formed on the end adjacent their fulcrums **14** which mesh with the toothed upper edges **18** of racks **19** which are provided with central horizontal slots **21** whereby they may be slidably supported for forward and rearward movement on arcuate guide rods **22** supported in the segment.

Adjacent the rear end of the rectangular toothed rack on its underside there is formed a pivot socket **23** which receives a complimentary shaped upturned end **24** of a coupler link **25** that extends forwardly. The upper edge of the coupler link **25** beyond the forward end of the rack extends upwardly and then forwardly to define a rearwardly facing shoulder **26** and an action interlock surface **27** as will hereinafter appear. The lower edge of the coupler link below the forward edge of the rack extends downwardly, forwardly and upwardly forming an abutment **28**. A spring **29** secured to the abutment and to the segment opposite or below the coupler pivot serves to assure that the coupler will normally be held rotated to the inactive position of FIGURE 3. The spring **29** also serves as an impression controller; type actions associated with small area type being provided with stronger springs. Thus from the above each type action comprises a type bar **13**, rack **19**, coupler **25** and spring **29** mounted in associated segment slots.

The power source for propelling the type actions comprises an arcuate reciprocatable actuator **31** slidably

mounted on and guided for movement on the guide rails **16**. As viewed in the FIGURES 3 and 3A the rear edge of the actuator **31** is bent downwardly forming a forward drive surface **32** and a rear drive surface **33**. The former is operable to engage the shoulder **26** on a selected coupler **25** thereby to power, under the agency of a common power spring **34** connected to the machine sub-frame and to a lug **35** secured centrally of the arcuate actuator, an action to printing position. The rear drive surface **33** is operable when the actuator is motor powered rearwardly to engage the forward end **36** of and to push a rack **19** rearwardly thus returning the type bar. The actuator **31** is adapted to be pulled rearwardly by a link **37** (FIGURES 1–4) secured thereto and which extends rearwardly, its terminal end rotatably supporting cam follower rollers **38**. The link just forwardly of the terminal end is formed with an elongated horizontal slot **39**, as best seen in FIGURE 3, which receives a shaft **41** comprising the output element of a cycle clutch. The shaft eccentrically carries a double cam **42** the periphery of which is defined by a semi-circular section **43**, the circle diameter of which, in the normal position of the cam shown in FIGURE 3, lies on a horizontal line **44** through the center of the cam shaft **41** and the centers of the follower rollers **38**, a short straight section **45** tangent to the circle periphery and at right angles to said diameter, and a straight section **46** defined by a chord parallel to and a predetermined distance above said line **44**. Normally the straight section **45** of the cam abuts the follower rollers **38** and holds the link or follower **37** rearwardly in a home position as shown in FIGURE 3; thus the power spring **34** is charged or energized and the forward end of the slot **39** is adjacent the shaft **41**. When the cycle clutch is energized, as will hereinafter appear, to effect a 360° clockwise cam excursion as viewed in FIGURE 3, the link **37** is permitted to be drawn forwardly with the actuator under the power of spring **34**; this link movement being accommodated by the slot. After approximately a half cycle (FIGURE 4) the semicircular cam periphery **43** acting on the rollers **38** on the link will begin to and draw the link and actuator rearwardly; the actuator drive surface **33** engaging and rearwardly driving the rack **19**.

The selection of a type action and the initiation of a printing cycle i.e. the interposition of a coupler shoulder **26** in front of the actuator drive surface **32** and the energization of a clutch cycle is effected by a pull on a sheathed wire **47**; the sheath **48** being anchored at suitable points to the machine frame. As shown in FIGURE 3 the terminal end of the wire together with sheathing is bent into a loop **49** and the terminal end **51** of the wire is secured to the sheathing as by being bent back thereover. The loop **49** is coupled via a motion transmitting spring **52** to the depending arm **53** of a trigger element **54** which is located within a slot **55** in and pivoted on a rod **56** supported by an arcuate member **57** located below the type action supporting segment **11**. The arcuate member is secured to a U-shaped machine frame member **58** as by screws **59** and outwardly extending end flanges of arcuate segment **11** are secured as by screws **60** to the ends of the arcuate member **57** thus providing for interchangeability of segments. As shown in FIGURE 3 a section of the wire forwardly of the loop section **49** is bared to allow the sheath of loop portion to move forwardly incident to a pull on the wire thus to pull on the spring **52** which will rock the trigger element **54**.

A pull on the wire **47** may be effected by energization of a solenoid selected by a code translator and to whose armature the wire may be connected.

Alternatively, as shown in FIGURE 1, the machine may be operated from a keyboard whose keys **61** when depressed rock a crank **62** to which the wires are connected. Obviously, as wires constitute the sole connection between the keyboard and actions, the wires may be variously connected to any type action allowing more efficient placement of character bars in the segment.

In the event that a second key is depressed while the action initiated by a first key is in progress, the action in progress preventing its trigger element associated with the second key from being rocked, as will hereinafter be made clear, the pull on the wire **47** will act to stretch its motion transmitting spring **52**, storing energy for as long as the key remains depressed.

Each trigger element **54** has a forwardly extending arm **63** to which one end of a return spring **64** is connected; its other end being secured to the arcuate member **57** to bias the trigger element counterclockwise as viewed in FIGURE 3. As shown in FIGURE 1 the forwardly extending arms **63** of each trigger element progressively widens and is provided with a rectangular opening **65** in its body. A hole **66** in the forward end of the arm communicates with the rectangular opening and supports a by-pass pin **67**. The by-pass pin is biased forwardly by a coiled spring **68** located in the opening engaging a collar **69** on the pin and a fixed pin **70** extending from the back wall of the opening. The by-pass pin **67** is operable when the trigger element is rocked clockwise in response to key depression to engage the lower end of an abutment **28** of and lift the associated coupler element **25** into the path of the actuator drive surface **32**.

In accordance with the invention the movement of the coupler **25** to a position in front of the actuator and the energization of a cycle clutch occur substantially simultaneously. The energization of the clutch may be effected mechanically through the action of a common bail positioned to be operable by movement of any of the trigger elements **54** and which is operable in turn, on a clutch trip element. Alternatively as shown in the drawings, the energization of the cycle clutch may be effected electrically by energization of a solenoid **71** (FIGURES 1–3) in response to the make of a common switch generally designated by numeral **72**, responsive to movement of any of the trigger elements or couplers. More particularly, as shown in FIGURES 1 and 3, the arcuate element **57** is formed with a channel **73** which extends from end to end below or opposite the abutments **28** of the couplers **25**. The channel houses a molded two piece plastic switch housing defining compartments; one associated with each type action. The housing comprises a front wall **74** having a rearwardly extending top flange **75**, and a back wall **76** having a forwardly extending lower flange **77**. The back wall has a plurality of forwardly extending radially spaced ribs **78** which, when the front and back wall are mounted in the channel, form compartments **79**. All of the ribs **78** are formed with lower and upper slots **80** defining parallel arcs. A common fixed arcuate contact **81** is threaded through all of the lower slots and a second fixed contact **82** is threaded through all of the upper slots; the second fixed contact **82** having spaced perforations **83** which, when the contacts are located, are within the compartments. Each compartment between the fixed contacts carries a conductive spring **84** which rests on the lower contact **81** and a movable ball contact **85** which is supported by and biased upwardly by the spring **84** towards the upper fixed contact **82**. In each compartment above the fixed contact there is provided a cylindrical plastic plunger **86** having an enlarged upper portion and a lower shank portion **87** which is mounted in the perforation **83** in the upper fixed contact **82** and is operative on the ball contact to compress the spring when the enlarged upper end, which extends through the opening in the top of each compartment, is depressed by a coupler. The enlarged upper end of the plungers are shaped so as to present a shoulder **88** which cooperates with the top flange **75** of the front wall of the switch housing to limit the upward movement of the plungers. Accordingly, in the normal condition, the circuit between the upper and lower fixed contacts **81** and **82** is open. When a coupler **25** is raised by an associated trigger element **54** the contact spring **84** is free to push the

movable ball contact **85** upwardly into engagement with the upper contact **82** completing a power circuit **89** to a cycle clutch solenoid **71** which will initiate a cycle to permit the selected coupler and its action to be driven.

The cycle control elements comprise as shown in FIGURE 2 the normally stationary shaft **41** rotatably supported in the machine frame. Rotatably mounted on and adjacent one end of the shaft is a pulley **91** adapted to be driven by a motor driven belt **92**. Secured to or integrally formed with the hub of the pulley is the driving element **93** of a dog clutch having axially extending teeth **94**. The driven clutch element comprises an axially movable collar **95** rotatably mounted on shaft, and coupled as by a tongue and groove **96** connection to an axially spaced actuator collar **97** which is secured to the shaft. The driven clutch element has axially extending teeth **98** on one end facing the teeth **94** on the driving clutch element. A coiled spring **99** mounted about the collar **97** normally urges the collar toward clutch engagement. The clutch elements are normally held spaced apart by the engagement of a pin **101** extending radially from the collar **95** with a clutch latch element **102** whose end is bifurcated, whereby as the clutch completes a clockwise revolution, the engagement of the pin **101** with a sloping cam leg **103** defined by the bifurcation will axially cam the collar **95** out of engagement and hold it latched. The clutch element is normally biased into clutch latch position by a spring **104**.

When the clutch solenoid **71** is energized its armature **105** will engage an abutment **106** on and thereby rock the latch element clockwise permitting the clutch spring **99** to axially move the collar **95** to clutch engagement initiating a cycle of shaft.

As hereinbefore noted, the shaft **41** carries the double cam **42** which controls the movement of link **37** to permit the power spring **34** to propel the actuator **31** and to positively return the actuator in a revolution.

In operation then, depression of a key **62** will move its associated coupler **25** in front of the shuttle drive face **32** (FIGURE 3A) and this coupler movement will permit the solenoid circuit (FIGURES 2 and 3) to be completed thus energizing the solenoid **71**. The energization of the solenoid will pull its armature **105** and thereby rock the clutch latch **102** permitting the clutch spring **99** to move the toothed collar **95** into engagement with the driving element **93** of the clutch, initiating a shaft cycle.

As the shaft rotates the cam clockwise as viewed in FIGURES 3 and 4, presenting the straight section **46** opposite the follower rollers **38**, the link will be released permitting the power spring **34** to pull the actuator **31** forwardly driving the action coupled thereto. FIGURE 3B shows the relationship of the actuator, coupler, and rack during drive of the action to printing position. The power spring **34** is effective to drive the type bar to a position just touching the first sheet of, for example, a 10-sheet pack of paper to be printed upon, the momentum of the action effecting impression. During the movement of the action under its momentum the rack moves from the FIGURE 3B to the FIGURE 3 position with its end **36** substantially in contact with the rear face **33** of the actuator at which time the cam **42** as shown in FIGURE 4, acting on the follower rollers **38**, draws the link **37** rearwardly thereby power returning the action and recharging the power spring **34**.

During the return of the rack and associated coupler the abutment **28** on the latter will act on plunger **86** to open the switch **72** thereby to break the solenoid circuit whereby the clutch latch element **102** will be positioned to engage the pin **101** and to cam the cooperating clutch elements apart to avoid the initiation of a subsequent cycle.

Should a key **62** be depressed overlong such that a trigger element is still elevated, the return movement of the coupler, guided by a shelf **107** on the frame, will push the by-pass pin **67** into the opening **66** thereby to prevent a repeat action until the associated key is restored.

In the event several keys are depressed simultaneously to couple two or more actions to the actuator, the power spring **34** will have insufficient power to drive them to the platen. In the event that two or more bars are so partially driven, they will be power returned during the cycle. Should a second key be depressed while a cycle is in progress, the action interlock surface **27** of the coupler associated with the second depressed key will encounter the edge **108** of the actuator, said surface being sufficiently long to be blocked by the actuator in any active position thus preventing movement of the coupler and associated trigger element as hereinbefore noted. Hence a premature second key depression will only serve to store energy in the associated motion transmitting spring **52**.

The cycle shaft **41** may also be provided with additional cams such as **109** operative on followers to elevate a ribbon and to trip an escapement at proper times in a cycle.

To print upper case the machine contemplates a platen shift mechanism although a segment shift is possible.

Further, the machine may be operated automatically from a record; the trigger elements being operated by solenoids selected by a translator of recorded codes.

It should be understood that the foregoing disclosure relates to only a preferred embodiment of the invention and that it is intended to cover all changes and modifications of the example of the invention herein chosen for the purposes of the disclosure which do not constitute departures from the spirit and scope of the invention.

The invention claimed is:

1. In a power operated typewriter having a set of type actions and a common reciprocatable actuator movable forwardly from a home position to drive type actions selectively coupled thereto from a rest to a printing position, and movable rearwardly to said home position to drive a driven type action back to rest position, each of said type actions comprising a type bar, a first part positionable forwardly of and adapted to be driven by said actuator during its forward movement, and a second part articulately connected to and movable with said first part and connected to drive said type bar to printing position and return, said second part having an edge located rearwardly of and adapted to be driven by said actuator during its rearward movement,

said type bar being positively mechanically connected to said actuator during substantially the entirety of its forward and backward strokes,

a common power spring connected to draw said actuator forwardly,

a common link connected to draw said actuator rearwardly thereby tensioning said power spring,

a motor powered drive adapted to drive said common link and actuator rearwardly,

cyclic means operable to consecutively, release said link to permit forward movement of said actuator, connect said motor powered drive to said link to drive said link and actuator rearwardly to a home position, and to maintain said link and actuator withdrawn against the urge of said power spring,

and keying means movable to position a selected said first part forwardly of said actuator and to cycle said cyclic means.

2. A power operated typewriter as recited in claim **1** wherein said second part comprises a gear rack and said type bar comprises a gear segment.

3. A power operated typewriter as recited in claim **1** wherein said cyclic means comprises a driven clutch part having a link control cam secured thereto, a driving clutch part continuously driven, means for normally maintaining said clutch parts disengaged and for disengaging said clutch parts each revolution of said driven clutch part, and means for effecting the engagement of said clutch

parts in response to the movement of said keying means.

4. A power operated typewriter as recited in claim 1 wherein said actuator has an arcuate shape, and wherein said set of type bars are mounted on an inner arcuate segment and wherein said keying means are mounted on an outer arcuate segment, said inner segment being secured to said outer segment, said inner segment including means for guiding said arcuate actuator.

5. A power operated typewriter as recited in claim 1 wherein said first parts extend forwardly of and underly said actuator thereby to block positioning movement of a said first part during movement of said actuator.

6. A power operated typewriter as recited in claim 5 wherein said keying means comprises an element rockable in response to a keying signal thereby to elevate an associated said first part forwardly of said actuator, and means responsive to the movement of a said first part for generating a cycle signal.

7. A power operated typewriter as recited in claim 6 wherein said keying means includes a keyboard and wires connected between keys on said keyboard and associated rockable elements to transmit keying signals to said rockable elements.

8. A power operated typewriter as recited in claim 7 wherein said wires are connected to said rockable elements through motion transmitting springs whereby if a rockable element is blocked, energy is stored in its associated spring for as long as its associated key remains depressed.

References Cited

UNITED STATES PATENTS

1,156,061	10/1915	Crawley	197—17
1,156,288	10/1915	Hansberg	197—14
1,455,112	5/1923	Crawley	197—17
1,667,773	5/1928	Degener	197—17
1,732,370	10/1929	Leyvraz	197—14
2,353,803	7/1944	Avery et al.	197—17
2,812,048	11/1957	Tibbling	197—17
2,773,931	12/1956	Kleinschmidt et al.	197—17 X
2,825,440	3/1958	Bouder et al.	197—17
2,833,387	5/1958	Lake et al.	197—14
3,151,722	10/1964	Salto	197—17

ROBERT E. PULFREY, *Primary Examiner.*

E. S. BURR, *Examiner.*