June 9, 1936. A. E. GRANT ET AL 2,043,851

SOCKET PLUG

Filed Aug. 11, 1931

Fig:1.

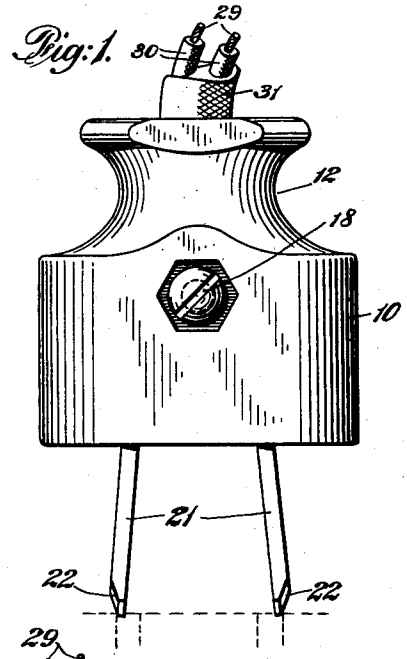

Fig:2.

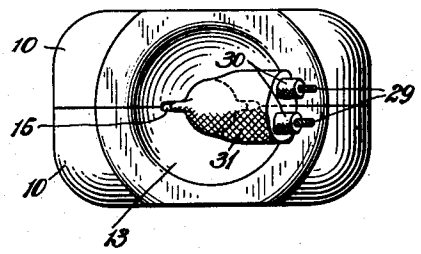

Fig:3.

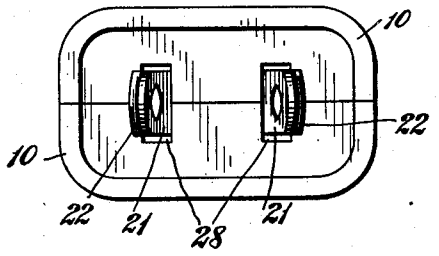

Fig:6.

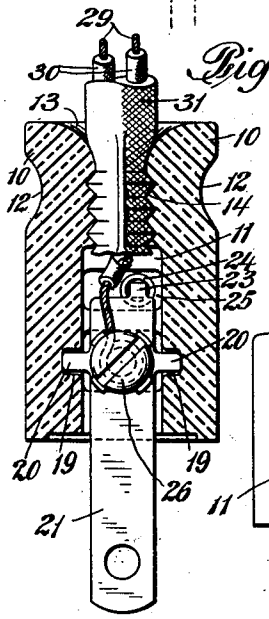

Fig:5.

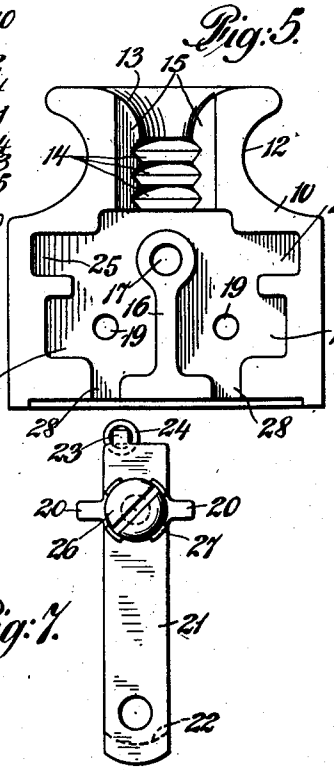

Fig:4.

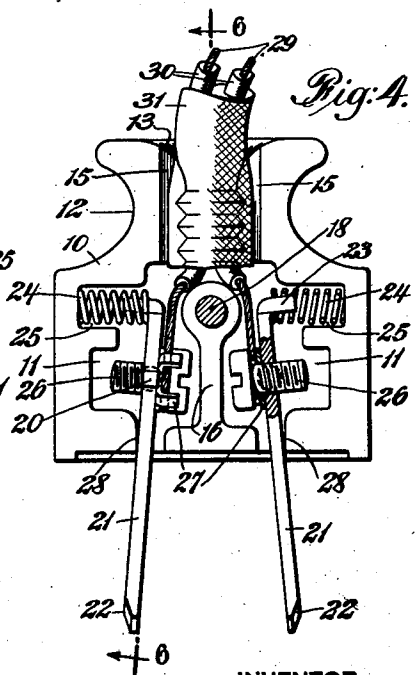

Fig:7.

INVENTOR

Albert E. Grant

Samuel W. Vanderbeck

BY

Frank M. Ashley

ATTORNEY

Patented June 9, 1936

2,043,851

UNITED STATES PATENT OFFICE

2,043,851

SOCKET PLUG

Albert E. Grant, New York, and Samuel W. Vanderbeek, Manhasset, N. Y.

Application August 11, 1931, Serial No. 556,376

2 Claims. (Cl. 173—361)

Our invention relates to electric socket plugs.

The object of our invention is to provide an improved attachment plug embodying means for holding the contact members of the male and female portions of the plug in firm contact to effect perfect transmission of the current therethrough.

Our invention consists in providing an improved form of casing and the detailed features of construction which permit the plug to be made at a minimum of cost with a maximum of utility.

Referring to the drawing which forms a part of this specification:—

Fig. 1 is an elevational view of a plug embodying our invention.

Fig. 2 is a plan view of the plug.

Fig. 3 is an inverted plan view of the plug.

Fig. 4 is a view showing half of the casing with the elements of construction mounted therein.

Fig. 5 is an interior view of one of the half portions of the casing.

Fig. 6 is a vertical cross sectional view taken on lines 6—6 of Fig. 4.

Fig. 7 is a side view of one of the terminal contact members with a binding post mounted thereon.

10—10 respectively indicates two half portions of the casing which are alike in form and construction.

The casing is made of bakelite, or similar plastic insulating material, which is moulded in the usual manner, in which is formed a chamber 11 to receive the mechanical parts of the plug.

The upper end of the casing is formed with a neck portion 12 of reduced diameter to form a gripping surface for the fingers in manually engaging or separating the male and female portion of the plug. The upper end of the neck portion is formed with a bell shaped opening 13 and a plurality of concentric flanges 14 are moulded in the neck portion between the bell shaped opening and the chamber 11. Lateral slots 15 are formed transversely and intersect the flanges 14 which extend from the bell shaped opening 13 to the chamber 11.

A partition 16 is moulded integral with the casing, through the upper end of which an opening 17 is formed through which a bolt 18 extends to hold the two half portions of the casing together.

Circular recesses 19 are formed in the casing on each side of the partition, the walls of which serve as bearing surfaces for the pinions 20 of the rigid contact elements 21, the lower ends of which project beyond the casing the usual distance and are tapered or chamfered at their outer ends as illustrated at 22. The upper ends of the contact elements 21 are reduced in size adjacent to one corner thereof and are bent at sharp angles, as illustrated at 23, and spiral springs 24 are mounted thereon and nest in sockets 25 formed in the inner wall of the casing, as illustrated.

A binding post comprising a screw 26 and a clip-washer 27 is provided for each of the contact elements 21, the form of said washer being clearly shown in Figs. 6 and 7.

The elements 21 are made from flat sheet metal by a stamping operation and therefore the pinions 20 are rectangular in cross-section and the corners of the pinions rest in contact with the walls of the recesses 19, as will be readily understood.

Wire conductors 29 are enclosed in the usual insulating cover 30 and these in turn extend through parallel holes formed in a circular soft rubber casing 31 which in turn is inserted between the two half portions of the casing and is clamped there by the nut and bolt construction 18. A portion of the casing 31 is thus gripped by the flanges 14 to prevent its accidental withdrawal from the neck and the slots 15 also receive portions of the casing to prevent it from twisting in the neck portion.

The lower free ends of the wire conductors 29 are clamped between the washer 27 and the head of the bolt 26 to secure them in firm contacting relation with the terminal elements 21.

By this construction the parts may be rapidly made and assembled, and due to the shape of the plug, no excess material is moulded in forming the casing, therefore both the casing and the parts may be made at a minimum of cost.

From the foregoing it will be seen that the pressure of the springs 24 is exerted inwardly against the inner ends of the contact elements and causes them to pivot on the pinions 20 and diverge outwardly and rest against the inner wall of the casing at 28. The ends of the contact elements 22 are thus positioned to rest against the outer edges of the slots formed in the female portion of the plug, as illustrated in Fig. 1.

In operation, when the male and female portions of the plug are forced toward each other in the act of coupling, the outwardly extending portions of the contact elements will be drawn together into a substantially parallel relationship against the resistance of the springs and thus provide a firm contact with the usual contact elements carried in the female portion of the plug.

Having thus described our invention, we claim as new:

1. An attachment plug of the character described comprising a casing and a pair of contact blades pivoted therein and extending outwardly therefrom, resilient means within the casing normally holding the outwardly extending portions of the blades at an angle to each other, the outer ends of said blades being chamfered and normally spaced a part a distance such that their chamfered areas are adapted to engage margins of respective socket openings in a standard receptacle plug to cause the blades to be drawn into substantial alignment against the resistance of said resilient means in the act of coupling.

2. An attachment plug of the character described comprising a casing and a pair of contact blades pivoted therein and extending outwardly therefrom, resilient means within the casing normally holding the outwardly extending portions of the blades at a divergent angle to each other, the outer ends of said blades being chamfered and normally spaced apart a distance such that their chamfered areas are adapted to engage the outer margins of respective socket openings in a standard receptacle plug to cause the blades to be drawn into substantial alignment against the resistance of said resilient means in the act of coupling.

ALBERT E. GRANT.
SAMUEL W. VANDERBEEK.